LIST OF EFFECTIVE PAGES

Page No.	Issue
*Title	17 Oct 75
*A thru B	17 Oct 75
i	17 Dec 71
*ii thru iv	17 Oct 75
v	31 Jan 75
*1-1	17 Oct 75
1-2	Original
1-3	31 Jan 75
1-4	Original
1-4A thru 1-4B	31 Jan 75
1-4C thru 1-4F Added	31 Jan 75
1-5	17 Dec 71
1-6	15 Sep 72
1-7 thru 1-10	Original
1-11	15 Jun 67
1-12	31 Jan 75
1-13	15 Sep 72
1-14	31 Jan 75
1-15	17 Dec 71
1-16 thru 1-17	Original
1-18	17 Dec 71
1-18A	31 Jan 75
1-19 thru 1-21	31 Jan 75
1-22 thru 1-23	Original
*1-24	17 Oct 75
*1-24A thru 1-24B	17 Oct 75
1-25 thru 1-26	Original
*2-1	17 Oct 75
2-2	31 Jan 75
2-2A thru 2-2E Added	31 Jan 75
2-3	31 Jan 75
2-4	17 Dec 71
2-5 thru 2-8	Original
2-9	17 Dec 71
2-10	30 Dec 67
2-10A Added	17 Dec 71
2-11	17 Dec 71
2-12	31 Jul 69
2-13	17 Dec 71
2-14	Original
2-15	31 Jan 75
2-16	Original
2-16A Added	31 Jan 75
2-17 thru 2-20	31 Jan 75
2-20A	31 Jan 75
2-21 thru 2-22	31 Jan 75
2-23 thru 2-24	Original
2-25	30 Dec 67
2-26 thru 2-27	17 Dec 71
2-28	30 Dec 67
2-29 thru 2-30	17 Dec 71
2-30A Added	17 Dec 71
2-31 thru 2-32	31 Jan 75
2-33	Original
2-34	31 Jan 75
*2-35 thru 2-36	17 Oct 75
*2-36A thru 2-36B Added	17 Oct 75
2-37	31 Jan 75
2-38	31 Jul 69
2-38A	17 Dec 71
2-39	9 Feb 73
2-40	Original
2-41	31 Jan 75
2-42	17 Dec 71
2-42A Added	17 Dec 71
2-43	17 Dec 71
2-44 thru 2-49	Original
2-50 thru 2-51	31 Jan 75
2-52 thru 2-56	Original
2-57 thru 2-58	17 Dec 71
2-59 thru 2-64	Original
2-65	17 Dec 71
2-66 thru 2-68	Original
2-69	30 Dec 67
2-70	Original
2-71	31 Jan 75
2-72 thru 2-76	Original
2-77 thru 2-78	31 Jul 69
*2-79 thru 2-86 Added	17 Oct 75
3-1	31 Jan 75
3-2	15 Sep 72
3-3	17 Dec 71
3-4 thru 3-7	Original
3-8	31 Jan 75
3-9 thru 3-14	Original
3-15 thru 3-16	31 Jan 75
3-16A Added	31 Jan 75
3-17 thru 3-19	Original
3-20	17 Dec 71
3-21 thru 3-23	Original
3-24	17 Dec 71
3-25 thru 3-26	Original
3-26A thru 3-26B	31 Jan 75
3-26C Added	31 Jan 75
3-27	15 Jun 67
3-28 thru 3-32	Original
3-33	17 Dec 71
3-34 thru 3-38	Original
3-39	31 Jul 69
3-40	15 Jun 67
3-41	20 Aug 70
3-42	Original
3-43	15 Sep 72
3-44 thru 3-51	Original
3-52	31 Jul 69
3-53	31 Jan 75
3-54	20 Aug 70
3-55	Original
3-56 thru 3-57	17 Dec 71
3-58 thru 3-60A	31 Jan 75
3-61 thru 3-63	17 Dec 71
3-64	Original
3-65	20 Aug 70
3-66	17 Dec 71
*3-66A	17 Oct 75
3-67	31 Jan 75
3-68 thru 3-69	Original
3-70	31 Jan 75
3-71	17 Dec 71
3-72	31 Jan 75
3-73 thru 3-75	17 Dec 71
3-76 thru 3-77	Original
3-78	15 Sep 72
3-79 thru 3-82	Original
3-83	17 Dec 71
3-84	Original
3-85	17 Dec 71
3-86 thru 3-89	Original
3-90	17 Dec 71
3-91	Original
3-92	20 Aug 70
3-93	17 Dec 71
3-94	31 Jan 75
*3-95 thru 3-96	17 Oct 75
3-97	31 Jan 75
*4-1	17 Oct 75
4-2	30 Dec 67
4-3	31 Jan 75
4-4 thru 4-15	Original
4-16	15 Sep 72
4-16A thru 4-16B Added	20 Aug 70
4-17	17 Dec 71
4-18	Original
4-19	31 Jul 69
4-20	Original
4-21	20 Aug 70
4-22	Original
4-23	31 Jan 75
*4-24 thru 4-25	17 Oct 75
4-26 thru 4-27	Original
4-28	17 Dec 71
4-29	31 Jul 69
4-30	31 Jan 75
4-31	31 Jul 69

INSERT LATEST CHANGED PAGES; DESTROY SUPERSEDED PAGES

*The asterisk indicates pages changed, added, or deleted by the current change.

NOTE: The portion of the text affected by the current change is indicated by a vertical line in the outer margin of the page.

LIST OF EFFECTIVE PAGES (Continued)

Page No.	Issue
4-32 thru 4-34	31 Jan 75
4-34A Added	31 Jan 75
4-35 thru 4-36	31 Jan 75
4-36A Added	31 Jan 75
4-37 thru 4-38	31 Jul 69
*5-1	17 Oct 75
5-2	Original
*5-2A thru 5-2B Added	17 Oct 75
*5-3 thru 5-4	17 Oct 75
5-4A	31 Jan 75
5-4B Added	17 Dec 71
5-5 thru 5-6	Original
5-7	31 Jan 75
5-8 thru 5-9	Original
5-10	31 Jan 75
5-11	Original
5-12	17 Dec 71
5-12A thru 5-12G Added	17 Dec 71
*5-13	17 Oct 75
5-14 thru 5-15	Original
5-16	31 Jan 75
5-16A thru 5-16B Added	31 Jan 75
5-17	17 Dec 71
5-18 thru 5-20	Original
5-21 thru 5-22	31 Jan 75
5-22A Added	31 Jan 75
5-23 thru 5-27	Original
5-28 thru 5-29	17 Dec 71
5-30	9 Feb 73
5-30A Added	17 Oct 75
5-31 thru 5-32	Original
*5-33	17 Oct 75
5-34	Original
5-34A Added	17 Dec 71
5-35	17 Dec 71
5-36 thru 5-49	Original
6-1 thru 6-11	Original
6-12	31 Jul 69
6-12A Added	30 Dec 67
6-12B	31 Jul 69
6-13 thru 6-14	31 Jul 69
6-14A thru 6-14B	31 Jul 69
6-15	31 Jul 69
6-16	9 Feb 73
6-16A	31 Jul 69
6-17 thru 6-20	Original
7-1	15 Sep 72
7-2	9 Feb 73
7-3 thru 7-4	Original
7-5	31 Jan 75
7-6	17 Dec 71
7-6A	15 Sep 72
7-6B Added	15 Sep 72
7-7	Original
7-8	3 Jan 73
7-9 thru 7-10	17 Dec 71
7-11 thru 7-15	Original
7-16	31 Jan 75
7-17	Original
*8-1	17 Oct 75
8-2 thru 8-5	31 Jan 75
*8-6 thru 8-9	17 Oct 75
8-10	31 Jan 75
*8-11 thru 8-12	17 Oct 75
8-13 thru 8-18	31 Jan 75
*8-19	17 Oct 75
8-20	31 Jan 75
*8-21	17 Oct 75
8-22 thru 8-24	31 Jan 75
*8-25 thru 8-33	17 Oct 75
9-1/9-2	17 Dec 67
9-3 thru 9-10	Original
9-11 thru 9-12	15 Sep 72
9-13 thru 9-17/9-18	17 Dec 71
9-19 thru 9-28	Original
9-29/9-30	31 Jul 69
9-31 thru 9-34	30 Dec 67
9-35 thru 9-42	Original
9-43 thru 9-44	15 Sep 72
9-44A	31 Jul 69
9-45 thru 9-46	31 Jan 75
9-47 thru 9-48	31 Jul 69
9-49 thru 9-51	Original
9-52 thru 9-54	31 Jul 69
9-54A Added	17 Dec 71
9-55	Original
9-55A Deleted	17 Dec 71
9-56 thru 9-57	30 Dec 67
9-58 thru 9-62	Original
10-1 thru 10-40	Original
*Index 1 thru Index 7 Deleted	17 Oct 75

INTRODUCTION

This Service Manual has been prepared by the Technical Publications Section of GATES LEARJET CORPORATION. It contains the information necessary to enable a trained mechanic to service, trouble shoot, functionally check, and repair all systems and equipment installed in the LEAR JET. It also includes information necessary for the mechanic to perform maintenance or make minor repair to any unit in the aircraft normally requiring such action on the flight line or in the maintenance hangar. It covers the aircraft configuration as delivered to the customer.

This manual does not reflect part numbers and should not be used for ordering replacement parts. Spares and replacement parts should be ordered using the current Lear Jet Parts Catalog.

This manual is sectionalized as follows:

Section	I - Servicing and General Information
Section	II - Airframe and Flight Control Systems
Section	III - Hydraulic Systems and Landing Gear
Section	IV - Environmental Systems
Section	V - Engines, Fuel, and Oil Systems
Section	VI - Instruments
Section	VII - Electrical Systems
Section	VIII - Inspection Requirements and Replacement Schedule
Section	IX - Wiring Diagrams - Electrical Systems
Section	X - Wiring Diagrams - Electronics Systems

Any comments, suggestions, etc., concerning this Service Manual should be forwarded to:

GATES LEARJET CORPORATION
ENGINEERING DEPARTMENT
TECHNICAL PUBLICATIONS SECTION
P. O. BOX 1280
WICHITA, KANSAS 67201

LIST OF ILLUSTRATIONS

Figure No.	Title	Page No.
	SECTION I	
1-1	Lear Jet Model 23	1-2
1-2	Principal Dimensions	1-4
1-2A	Jacking and Leveling Provisions	1-4A
1-2B	Aircraft Electronic Weighing Kit	1-4C
1-2C	Attaching Weighing Cell to Aircraft Jack	1-4D
1-2D	Aircraft Weighing Record	1-4E
1-3	External Access and Inspection Provisions	1-7
1-4	Internal Access and Inspection Provisions	1-9
1-5	Servicing Landing Gear Shock Struts	1-11
1-6	Lubrication Requirements	1-12
1-7	Fuselage Stations, Frames, and Water Lines Diagram	1-15
1-8	Wing Assembly Structural Stations	1-16
1-9	Empennage Assembly Structural Stations	1-17
1-10	Refrigeration Service Connections and Equipment	1-22
1-10A	Oxygen Cylinder Filling Pressure Table	1-24
1-11	Torque Requirements - Threaded Fasteners	1-26
	SECTION II	
2-1	Wing to Fuselage Fairing	2-2
2-1A	Keel Beam Support Dolly	2-2A
2-1B	Wing Mating Dolly	2-2A
2-1C	Wing Torsion Link Fitting Bolt	2-2A
2-1D	Wing to Fuselage Attach Fittings	2-2B
2-1E	Spreader Bar	2-2B
2-1F	Wing Transfer Dolly	2-2C
2-1G	Vortex Generator Location and Installation	2-3
2-2	Typical Control Cable Damage Limits	2-4
2-3	Control Surface Balance Stand	2-5
2-4	Aileron Control System Installation	2-6
2-5	Autopilot Capstan Slip Clutch Adjustment	2-10
2-5A	Aileron Control System Rigging	2-10A
2-6	Followup Calibration and Adjustment	2-12
2-7	Aileron Trim and Balance Tab Installation	2-14
2-8	Aileron Spoiler Tab Installation	2-16
2-9	Flap System Installation	2-17
2-10	Flap Actuator Assembly	2-20A
2-11	Spoiler Installation	2-23
2-12	Spoiler Actuator Assembly	2-24
2-13	Rudder Control System Installation	2-26
2-14	Rudder Trim Tab Installation	2-31
2-15	Horizontal Stabilizer Installation	2-32
2-16	Stabilizer Actuator Motor Clutch Check	2-34
2-16A	Elevator Tip Cover Installation	2-36
2-17	Elevator Control System Installation	2-36B
2-17A	Elevator Control System Rigging	2-38A
2-18	Elevator Spoiler Tab Installation	2-40
2-19	Aileron-Rudder Interconnect Installation	2-41
2-20	Angle of Attack Transducer and Control Column Shaker Installation	2-42A
2-21	Cockpit Center Pedestal and Controls	2-44
2-22	Cabin Door - Upper	2-48
2-23	Cabin Door - Lower	2-50
2-24	Cabin Door Removal and Installation	2-53
2-25	Crew Seat Installation	2-57
2-26	Toilet Installation	2-59
2-27	Swivel Seat Installation	2-61

Figure No.	Title	Page No.
2-28	Aft Divan Seat Installation	2-63
2-29	Windshield Installation	2-66
2-30	Outer Windshield Installation	2-67
2-31	Cabin Window Installation	2-69
2-32	Emergency Exit Window Installation	2-70
2-33	Faying Surface Seal Application	2-73
2-34	Injection Seal Application	2-74
2-35	Hole and Slot Filling	2-74
2-36	Fillet Seal Application	2-75
2-37	Fastener Seal Application	2-75
2-38	Electrical Seal Fitting Application	2-76
2-39	Firewall Seal Application	2-77
2-40	Fuselage	2-81
2-41	Wing Center Splice	2-84
2-42	Vertical Stabilizer	2-85
2-43	Horizontal Stabilizer and Elevator	2-86
	SECTION III	
3-1	Hydraulic System Trouble Shooting	3-3
3-2	Hydraulic System Schematic	3-4
3-3	Hydraulic Components Installation	3-9
3-4	Hydraulic Filter	3-16
3-5	Main Landing Gear Switch Adjustment	3-17
3-6	Landing Gear Hydraulic System Schematic - Gear Up Cycle	3-19
3-7	Landing Gear Hydraulic System Schematic - Gear Down Cycle	3-23
3-7A	Main Gear Inboard Door Directional Control Valve	3-27
3-8	Emergency Air Extension System Schematic - Gear Down	3-28
3-9	Hydraulic Components Installation - Main Landing Gear	3-30
3-10	Hydraulic Components Installation - Nose Section	3-32
3-11	Trouble Shooting Chart - Landing Gear	3-35
3-12	Nose Gear Installation	3-38
3-13	Nose Landing Gear Wheel Assembly	3-40
3-14	Nose Gear Shock Strut Assembly	3-43
3-15	Nose Gear Shock Strut - Wear Tolerance	3-45
3-16	Nose Gear Actuator Assembly	3-47
3-17	Nose Gear Actuator - Wear Tolerance	3-49
3-18	Nose Gear Uplatch Installation	3-52
3-19	Nose Gear Uplatch Actuator Assembly	3-53
3-20	Nose Gear Uplatch Switch	3-54
3-21	Nose Gear Door Linkage - Gear Retracted	3-55
3-22	Nose Steering Computer and Rudder Pedal Synchro Installation	3-56
3-23	Nose Wheel Steering Actuator Assembly	3-58
3-24	Main Landing Gear Installation	3-63
3-25	Main Landing Gear Wheel Assembly	3-64
3-25A	Torque Arm Bushing Replacement	3-66A
3-26	Main Landing Gear Shock Strut Assembly	3-67
3-27	Metering Pin Removal Tool	3-68
3-28	Main Gear Shock Strut - Wear Tolerance	3-70
3-29	Main Gear Actuator Assembly	3-74
3-30	Main Gear Actuator - Wear Tolerance	3-76
3-31	Main Gear Inboard Door Uplatch	3-79
3-32	Main Gear Inboard and Outboard Door Installation	3-80
3-33	Main Gear Inboard Door Actuator Assembly	3-82
3-34	Brake System Schematic	3-84
3-35	Anti-Skid Brake System Installation	3-85
3-36	Multiple Disc Brake Assembly	3-87
3-37	Rigging Brakes	3-92
3-38	Spoiler System Schematic	3-94
3-39	Flap System Trouble Shooting	3-95
3-40	Flap System Schematic	3-96
3-41	Hydraulic Components - Flaps and Spoilers	3-97

Figure No.	Title	Page No.
	SECTION IV	
4-1	Refrigeration System Trouble Shooting	4-2
4-2	Refrigeration System Schematic	4-3
4-3	Refrigeration System Installation	4-5
4-4	Evaporator Installation	4-8
4-5	Compressor Oil Dipstick Fabrication	4-10
4-6	Cabin Air Conditioning Schematic	4-11
4-7	Cabin Air Conditioning Components Installation	4-13
4-7A	Tailcone Clamp and Coupling Torque Requirements	4-16A
4-8	Damper Rigging	4-18
4-9	Cross Section Flow Control Valve	4-19
4-10	Cabin Pressurization System Trouble Shooting	4-20
4-11	Cabin Pressurization System Control Schematic	4-21
4-12	Calibration of Cabin Altitude Controller	4-22
4-13	Cabin Pressurization System Components Installation	4-24
4-14	Cabin Safety Valve Cross Section	4-25
4-15	Peri-Seal Connector	4-26
4-16	Defog System Schematic	4-27
4-17	Defog System Components Installation	4-28
4-18	Windshield Dehumidifier Installation	4-29
4-18A	Windshield Ice Detector	4-30
4-19	Oxygen System Schematic	4-32
4-19A	Functional Check of Passenger Oxygen System	4-34
4-20	Oxygen System Installation	4-35
4-20A	Crew Oxygen Mask Hose Assembly Replacement	4-36A
4-21	Wing Leading Edge Anti-Icing Schematic	4-37
4-22	Wing Leading Edge Anti-Icing System Components Installation	4-38
	SECTION V	
5-1	Engine Danger Areas	5-2
5-2	Deleted	
5-3	Engine Installation	5-3
5-3A	Engine Mount Inspection	5-4A
5-4	Engine Assembly (Aircraft 23-003 thru 23-029)	5-7
5-5	Engine Assembly (Aircraft 23-030 thru 23-099)	5-9
5-6	Rigging Power Controls	5-11
5-6A	Throttle Cable Handling	5-12B
5-6B	Throttle Cable Installation	5-12C
5-7	Nacelle Installation (Typical)	5-13
5-8	Fire Detection System Trouble Shooting	5-14
5-9	Fire Detection System Installation	5-15
5-9A	Nacelle Anti-Icing System	5-16A
5-10	Fuel System Schematic	5-18
5-11	Tip Tank Installation	5-22
5-12	Fuselage Fuel Tank Installation	5-24
5-13	Wing Fuel Boost Pump Installation	5-26
5-14	Tip Tank Plumbing Installation	5-28
5-14A	Fuel Supply Line Check Valve Inspection	5-30A
5-15	Motorized Fuel Shutoff Valves Installation	5-31
5-16	Fuel Filter Installation	5-33
5-17	Ram Air Fuel Vent System Schematic	5-34
5-18	Ram Air Fuel Vent System Installation	5-34A
5-19	Fuselage and Wing Fuel Quantity Probe Installation	5-36
5-20	Insulation Resistance - Fuel Probe Sensors	5-38
5-21	Temperature Compensator Test Circuit	5-39

Figure No.	Item	Page No.
5-22	Fuel Quantity Indicator Test Circuit	5-39
5-23	Resistance - Fuel Quantity Selector Switch	5-40
5-24	Potentiometer Resistance	5-40
5-25	Value Check of Fixed Resistors	5-40
5-26	Fillet Dimensions - Integral Fuel Tanks	5-42
5-27	Faying Surface Seal	5-43
5-28	Injection Seals	5-43
5-29	Sealing Bolts and Rivets	5-43
5-30	Sealing Dome Type Nutplates	5-44
5-31	Sealant Removal and Cutting Tools	5-45
5-32	Sealant Fairing Tools	5-45
5-33	Fillet Seal Removal	5-46
5-34	Application of First Fillet	5-47
5-35	Pressing First Fillet Into Seam	5-47
5-36	Application of Final Fillet	5-47
5-37	Re-Entrant Fillets	5-48
	SECTION VI	
6-1	Trouble Shooting Chart - Instruments	6-2
6-2	Instrument Panel	6-4
6-3	Instrument Markings	6-8
6-4	Readout Panel	6-9
6-5	Fuel Flow Indicator Calibration	6-10
6-6	Engine Pressure Ratio Indicating System	6-11
6-6A	Conversion Table - Altitude to Inches of Mercury	6-12A
6-7	Pitot Static System Schematic	6-13
6-7A	Pitot Static System Schematic	6-14
6-8	Pitot Static System Plumbing Installation	6-14A
6-8A	MB-1 Pitot Static System Test Set	6-16A
6-9	Directisyn Flux Valve Installation	6-17
6-10	Position Indicator Calibration Assembly	6-19
	SECTION VII	
7-1	Wiring Identification	7-2
7-2	DC Power System Trouble Shooting	7-3
7-3	DC Power Distribution	7-5
7-3A	Starter-Generator Brush Wear Check	7-6A
7-4	Generator Control Panel and Box Installation	7-7
7-5	Voltage Regulator Installation	7-8
7-6	Typical Battery Installation	7-9
7-7	Auxiliary Battery System Schematic	7-10
7-8	Auxiliary Battery Installation	7-11
7-9	Inverter Installation	7-12
7-10	AC Power Distribution	7-13
7-11	Circuit Breaker Panel	7-14
7-12	Switch Panel	7-15
7-13	Exterior Lighting Installation	7-17

SECTION I
SERVICING AND GENERAL INFORMATION

TABLE OF CONTENTS

Title	Page
General Description	1-1
Leading Particulars	1-2
Principal Dimensions	1-3
Access and Inspection Provisions	1-3
Ground Handling	1-3
Towing	1-3
Jacking	1-3
Leveling	1-3
Weighing the Aircraft	1-3
Determining Aircraft Center of Gravity in Percent of MAC	1-4D
Fuel System Servicing	1-4F
Fuel Anti-Ice Additives	1-4F
Recommended Fuels	1-5
Fueling	1-5
Defueling	1-6
Fuel Filter Drain Valves	1-6
Fuel System Drain Valves	1-6
Lubrication System Servicing	1-6
Approved Oils	1-6
Adding Oil	1-6
Changing Oil	1-6
Flushing Lubrication System	1-10
Metallic Particle Check	1-10
Lubrication Requirements	1-10
External Power Receptacle	1-10
Servicing	1-10
Nose Gear Shock Strut	1-10
Main Gear Shock Strut	1-11
Tires	1-18
Batteries	1-18
Refrigeration System	1-20
Hydraulic Accumulator	1-22
Hydraulic Reservoir	1-23
Emergency Air Bottle	1-23
Oxygen System	1-24
Exterior Cleaning and Care	1-24
Exterior Paint Repair	1-24A
Erosion Protective Coating - Tip Tank and Defog Nozzle	1-24A
Interior Cleaning and Care	1-25
Electrical Bonding Requirements	1-26
Torque Requirements	1-26

GENERAL DESCRIPTION. The Lear Jet Model 23, manufactured by Lear Jet Industries, Inc., Wichita, Kansas, is an eight-place jet aircraft. The aircraft is an all-metal pressurized low-wing monoplane with full cantilever swept-back wing and tail surfaces and a semi-monocoque fuselage. Fully retractable tricycle-type landing gear with dual main gear wheels, an anti-skid braking system, and a steerable nosewheel are utilized. Power is provided by two General Electric axial flow turbojet engines, one mounted on each side of the aft fuselage. Each engine has a sea level thrust rating of 2850 pounds. Engine-driven hydraulic pumps provide power for extending and retracting the landing gear, the wing flaps, and the spoilers. The ailerons, elevators, and rudder are manually controlled by utilizing conventional cables, bellcranks, pulleys, and push-pull tubes. An electrically operated trim tab is installed on the left aileron and the rudder to provide lateral and directional trim. Longitudinal trim is accomplished by changing the incidence of the horizontal stabilizer with an electrically operated linear actuator. An independent fuel system is provided for each engine by using an electrically powered main fuel boost pump, mounted in each wing tank. Standby boost pumps, having the same capacity as the main boost pumps, provide fuel to the engines in case of main boost pump failure. Fuel is stored in the tip tanks, integral wing tanks, and the fuselage fuel tank. The Lear Jet air conditioning system provides passenger

Figure 1-1. Lear Jet Model 23

comfort and pressurizes the crew, passenger, and baggage compartments to a design operating pressure of 8.3 psi. Cabin conveniences and comforts include: a refreshment cabinet, ice chest, toilet, single and double width worktable, reclining 180° swivel seats, divan, ash trays, and an oxygen system. The Lear Jet is completely equipped with radio and electronic equipment consisting of: two complete navigation receivers for VOR, ILS, and glide slope; two communication transceivers; a marker beacon receiver; ADF; a transponder; weather radar; DME with distance and ground speed indicator; and autopilot.

LEADING PARTICULARS.

DESIGN GROSS WEIGHT - 12,500 pounds

FUEL CAPACITY
- [A] (Total) - 828 gallons
- [A] (Usable) - 804 gallons
- [B] (Total) - 841 gallons
- [B] (Usable) - 814 gallons
- [C] (Total) - 853 gallons
- [C] (Usable) - 829 gallons

OIL CAPACITY (Each Engine) - 4.0 quarts

ENGINES - General Electric Model [D] CJ610-1 [E] CJ610-4

Engine Rated Thrust - 2850 pounds (Sea level static standard day takeoff thrust).

Engine Maximum Continuous Thrust - 2700 pounds (Sea level static standard day thrust).

[A] Aircraft 23-003 thru 23-014.
[B] Aircraft 23-015 thru 23-051 except those modified by SK23-136.
[C] Aircraft 23-052 thru 23-099 and aircraft 23-028 thru 23-051 modified by SK23-136.
[D] Aircraft 23-003 thru 23-029.
[E] Aircraft 23-030 thru 23-099.

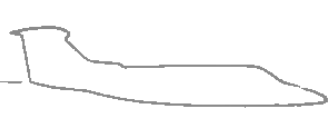

LANDING GEAR - Hydraulically Actuated Tricycle-Type with Dual Main Gear Wheels.

Main Wheel Tires - 18 x 5.5, 8- or 10-Ply Rating, Type VII.

Nose Wheel Tire - 18 x 5.5, 8- or 10-Ply Rating, Type VII.

FLIGHT CONTROL SURFACE TRAVEL -

Ailerons: Up 18° (±1°); Down 18° (±2°)

Horizontal Stabilizer:
Up is 1/2° (+0°, -1/2°) Down from neutral
Down is 7° (+1/2°, -0°) Down from neutral

Flaps: Down 40° (-0°, +5°)

Aileron Trim Tab: 8° (+1°, -0°) both Up and Down

Rudder: 30° (-1°, +2°) both Left and Right

Rudder Trim Tab: 11° (±1°) both Left and Right

Elevator: 15° (-0°, +1°) both Up and Down

Spoilers: Up 45 1/2° (+0°, -5°)

PRINCIPAL DIMENSIONS. (See figure 1-2.)

ACCESS AND INSPECTION PROVISIONS. (See figures 1-3 and 1-4.)

GROUND HANDLING.

TOWING.

CAUTION

When pushing aircraft backward with a towing vehicle, perform all braking with the towing vehicle. Aircraft brake application while the aircraft is being pushed backward, other than by hand, may cause damage to brake components. Also, do not energize nose wheel steering system while towing or steering actuator damage will result.

The aircraft is towed by a tow bar connected to the nose gear. Prior to towing, assure that the parking brakes are released and that the auxiliary hydraulic pump is operating to provide adequate pressure for braking.

JACKING. (See figure 1-2A.) The aircraft is raised off the ground by jacks located at three points. The nose or fuselage jack point is located just aft of the nose wheel well. The wing jack points are located on the wings, just aft of the main landing gear. Holes are provided in the aircraft structure at the jack points for installation of the jack pads.

CAUTION

Aircraft 23-003 thru 23-049 should not normally be jacked with full fuel load unless in an emergency. If the aircraft is jacked in this condition, the nose or fuselage jack point should be inspected for any possible structural damage. Aircraft 23-050 and subsequent may be jacked with full fuel load.

LEVELING. (See figure 1-2A.) Leveling the aircraft is accomplished by use of the forward portion of the inboard passenger seat rails adjacent to the cabin door. Lateral leveling is accomplished by placing a level across the inboard seat rails. Use the top surface of one seat rail to obtain longitudinal leveling. On [A], leveling provisions are installed in the upper and lower tailcone area immediately aft of Sta. 326.57 (frame 26) at RBL 5. A string, with plumb bob attached, is suspended down from the forward side of the clip so that the plumb bob point extends into the hole of the leveling plate. The aircraft is considered level when the plumb bob extends into, but does not touch the sides of the hole.

WEIGHING THE AIRCRAFT. (See figures 1-2B thru 1-2D.) From time to time it will become necessary to weigh and re-establish the aircraft basic weight and moment. Unless platform scales are available, the aircraft is weighed electronically by means of load cells attached to the jacks. The following procedure is applicable when using Cox and Stevens Electronic Scales.

Note

All weighing operations must be conducted in a closed hangar and care taken that no air currents pass over the aircraft during weighing.

a. Place the weighing kit close enough to the aircraft so that the 50 foot load cell cables will reach the three jack points and the 25 foot power cable will reach the 115 volt outlet (if 115 volts is to be used).
b. Unreel load cell cables and, observing color coding, connect the load cells to the cables.

Note

The load cells and their cables are color coded and must always be connected red to red, blue to blue and yellow to yellow.

c. Set CELL BALANCE switch on the indicator-amplifier to OFF.
d. Set toggle switch on power supply box to either 115 VAC, 60 Hz. or 24 VDC BATT depending on power source to be used.

[A] Aircraft 23-023 thru 23-099.

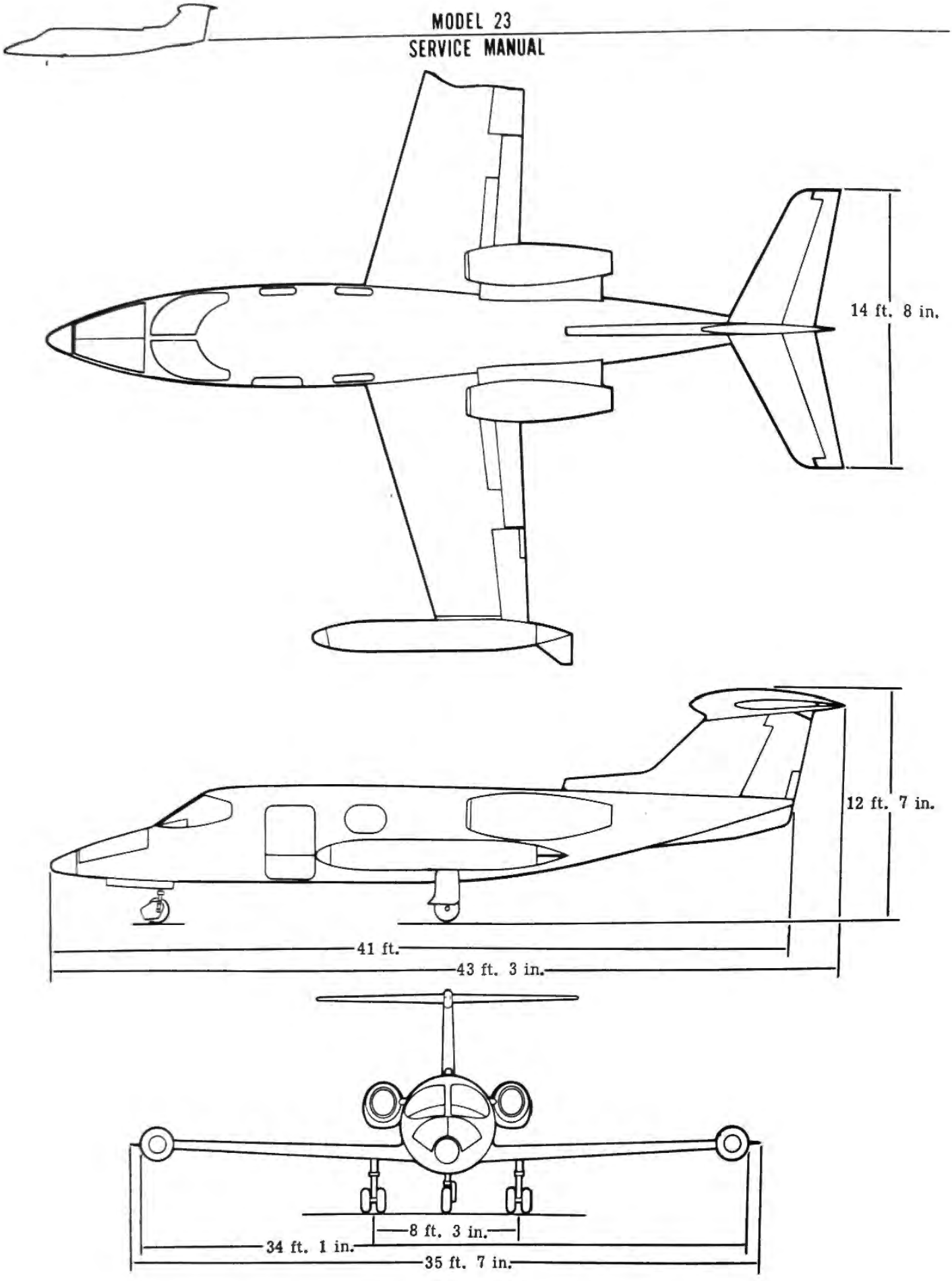

Figure 1-2. Principal Dimensions

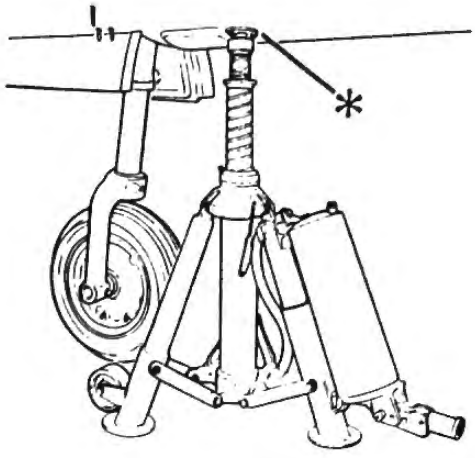

NOSE JACKPOINT

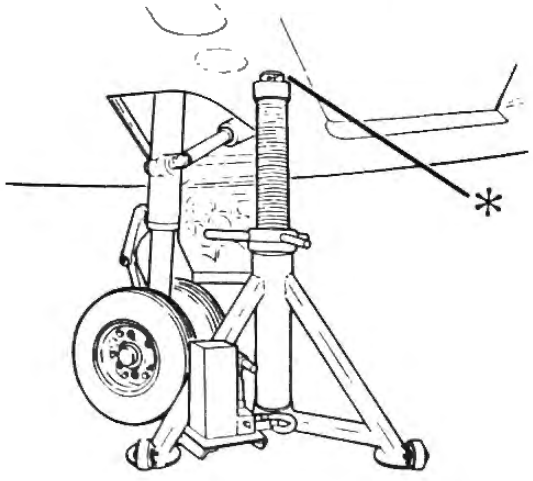

(TYPICAL)
WING JACKPOINT

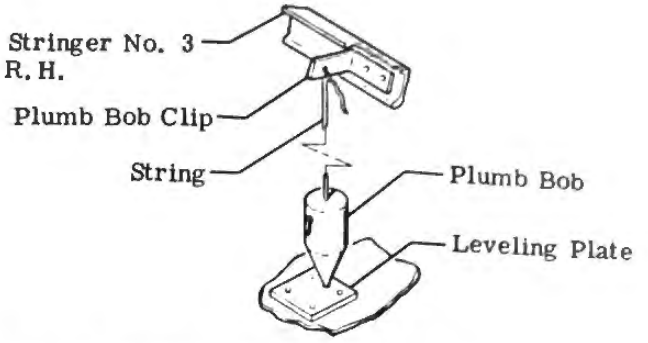

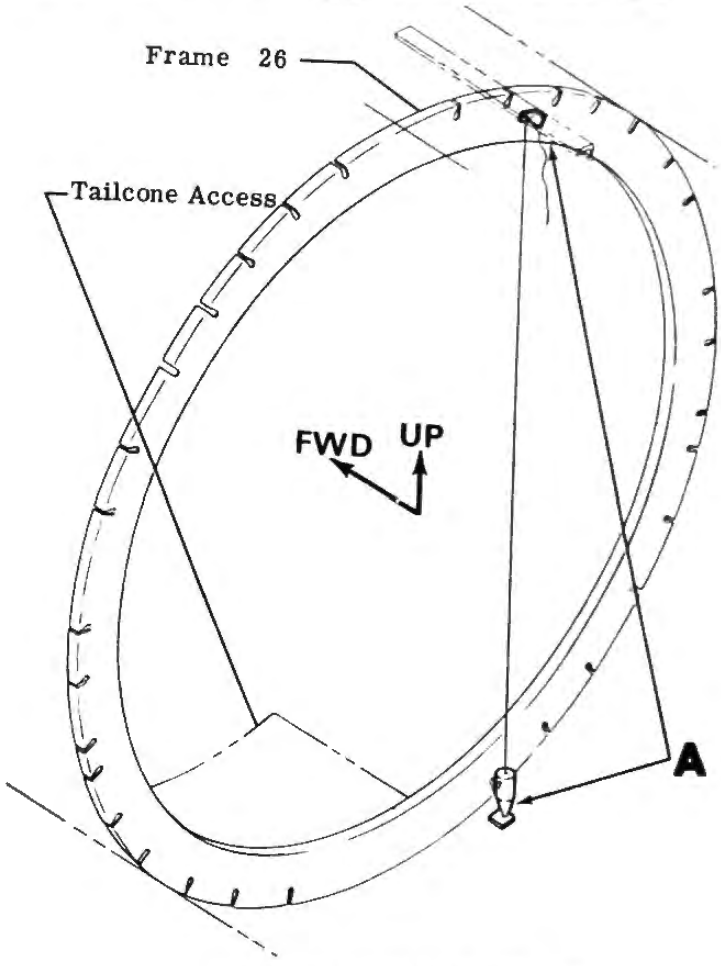

Aircraft 23-023 thru 23-099

AIRCRAFT LEVELING

Figure 1-2A. Jacking and Leveling Provisions

1. When using 115 volts AC, connect one end of the 25 foot power cable to the plug in the top of the power supply box marked AC LINE and the other end to the power source. Set the BATTERY VOLTAGE switch on the indicator-amplifier to ON. Turn the AC VOLTAGE ADJUSTMENT knob until the Balance Meter pointer rests in the center of the green area.

2. When using 24 volts DC, connect one end of the 15 foot power cable to the connector (male) which exits out the right hand side of the indicator-amplifier and the other end (battery clips) to the power source. Set BATTERY VOLTAGE switch on the indicator-amplifier to ON. If the Balance Meter pointer swings into

the yellow section, the polarity is reversed and the battery clips must be switched. If the Balance Meter pointer rests in either red section of the scale, the battery voltage is either too high or too low as indicated on the scale. Replace battery and/or adjust voltage until Balance Meter pointer rests in the center of the green section on the scale.

e. Select proper cell-to-jack adapters in accordance with the placard on the lid of the weighing kit case and attach adapters to load cells.

Note

Assure that the cell-to-jack adapters are threaded fully into the load cells and that the proper adapters are used; otherwise, damage to the aircraft, cell damage or inaccurate weight readings may occur.

f. With power on, allow the equipment to warm up a minimum of 20 minutes; this can be concurrent with aircraft preparation. A partial load on the cells is recommended during warm-up period.

g. Remove all loose equipment from the aircraft which is not a part of the aircraft empty weight

h. Inventory the aircraft for items which are not part of the empty weight but will have to be weighed with the aircraft. Enter each item, its weight and its arm under Column I in the Aircraft Weighing Record.

Note

The jack pads and attaching bolts are not part of the aircraft empty weight and must be entered under Column I in the Aircraft Weighing Record.

i. Inventory the aircraft for items which are fixed equipment but will not be weighed with the aircraft. For example, a seat which has been removed for repair. Enter each item, its weight and its arm under Column II of the Aircraft Weighing Record.

j. Defuel the aircraft. Refer to DEFUELING, this Section.

Note

The basic weight of the aircraft includes trapped and unusable fuel. If the fuel system has been purged, the trapped and unusable fuel weight and moment must be entered under Column II in the Aircraft Weighing Record. Fuel weight is 196.0 pounds (based on 6.7 pounds per gallon) and fuel moment is 38,400.

k. If necessary, wash aircraft to remove any accumulation of mud, dirt or grease.

l. Service the following to normal operating capacity: oil tanks, hydraulic reservoir, hydraulic accumulator, refrigeration system oxygen bottle, emergency air bottle, nose gear strut and main gear struts.

m. Lower tailcone access door and attach leveling plumb bob. Refer to LEVELING, this Section.

n. Attach jack pads to nose and wings. Refer to JACKING, this Section.

o. Attach load cells to jacks, assuring the adapters are properly secured.

Note

When ring type cell-to-jack adapters are used, assure that they are centered flush on the jack rams and apply a downward pressure before tightening set screws.

p. Position jacks, with cells attached, under, but not touching, jack pads.

q. Set CELL BALANCE switch on the indicator-amplifier to ON. There must not be any load on the cells at this time.

r. Set WEIGHT dial and INITIAL LOAD selector to 0.

s. Set the CELL SELECTOR to 1. Turn ZERO SET knob, marked CELL 1, until Balance Meter Pointer is on 0. Repeat this procedure for CELL 2 and CELL 3.

Note

Once the circuits have been zeroed, the ZERO SET knobs should not be changed.

CAUTION

Keep the aircraft level while jacking. Excessive side loads may cause cell damage, damage to the aircraft or incorrect weight readings.
Use proper adapters on jacks to prevent slipping or buckling.
Never apply a load on the rim of the cells.

t. Jack the aircraft until it is clear of the floor.

u. Level the aircraft. Refer to LEVELING, this Section.

v. Remove plumb bob and secure tailcone access door.

w. Close aircraft cabin door.

x. Drain tip tank, wing and fuselage sumps.

y. Set CELL SELECTOR to 1. The Balance Meter pointer will swing to the right. Turn the INITIAL LOAD selector until the Balance Meter pointer swings to the left. Set INITIAL LOAD selector to next lower calibration. Adjust WEIGHT dial until

Balance Meter pointer rests on 0. The combined reading of the INITIAL LOAD selector and WEIGHT dial is the weight on that cell. Record the weight in the proper space marked Scale Reading in the Aircraft Weighing Record. Repeat for CELL 2 and CELL 3.

Note

A minimum of two weight readings should be taken on each cell, upsetting the cell balance each time.

z. Lower the jacks until all load is removed from the cells.

aa. Set INITIAL LOAD selector to 0. Adjust the WEIGHT dial until the Balance Meter pointer is on 0. If there is a plus reading on the WEIGHT dial, divide it by two and enter it as a negative number under Tare on the Aircraft Weighing Record. If there is a minus reading on the WEIGHT dial, enter it as a positive number under Tare on the Aircraft Weighing Record. Repeat for the other two cells.

Note

If the tare is greater than 25 pounds the weighing procedure must be repeated.

ab. Turn off all switches, disconnect power and cell cables and return all components to the kit case. Set WEIGHT dial to read minus 50 pounds.

ac. Add or subtract the tare of each cell to or from its respective scale reading; enter the result under Net Weight in the Aircraft Weighing Record.

ad. Subtotal the left and right jack net weights.

ae. Multiply the net weight of the left and right jacks combined by their arm (264.87) to obtain moment. Record under Moment in the Aircraft Weighing Record.

af. Multiply the net weight of the nose jack by its arm (69.80) to obtain moment. Record under Moment in the Aircraft Weighing Record.

ag. Add the two moments.

ah. Add the net weights.

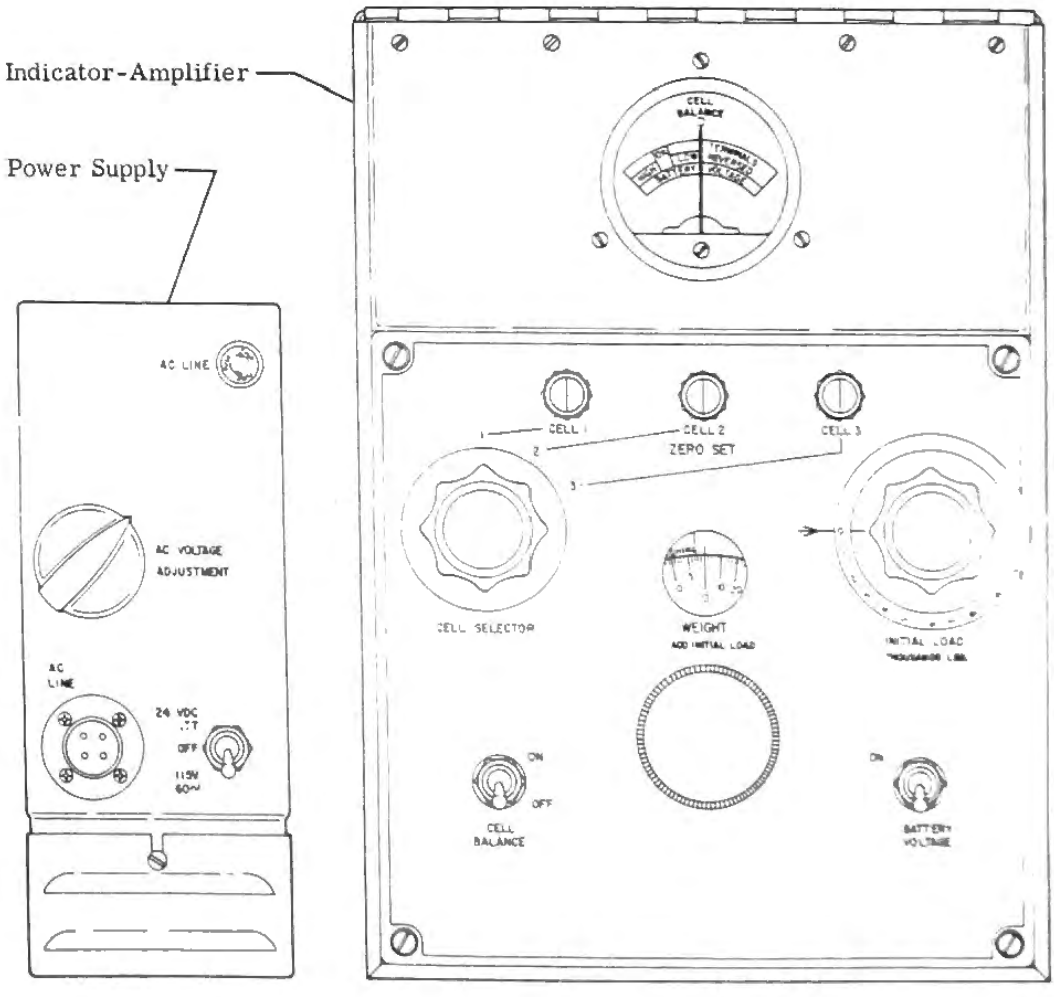

Figure 1-2B. Aircraft Electronic Weighing Kit

ai. Divide total moment by total weight to obtain CG of the aircraft as weighed.

aj. Total Column I weights and subtract from aircraft total weight.

ak. Total Column I moments and subtract from aircraft total moment.

al. Total Column II weights and add to aircraft total weight. This is the aircraft basic weight.

am. Total Column II moments and add to aircraft total moment. This is the aircraft basic moment.

an. Divide basic moment by basic weight. This is the CG of the aircraft.

DETERMINING AIRCRAFT CENTER OF GRAVITY IN PERCENT OF MAC. From the following formula it can be determined whether the aircraft CG is within the prescribed limits as defined by the Weight and Balance Data Manual. The formula states:

$$\% \text{ of MAC} = \frac{\text{Fuselage Station - Leading Edge of MAC}}{\text{MAC}}$$

Where: (1) Fuselage station is the CG or arm as defined in the Weight and Balance Data Manual.
(2) Leading edge of MAC is 210.04
(3) MAC is 84.49.

Therefore:

$$\% \text{ of MAC} = \frac{\text{Fuselage Station - 210.04}}{84.49}$$

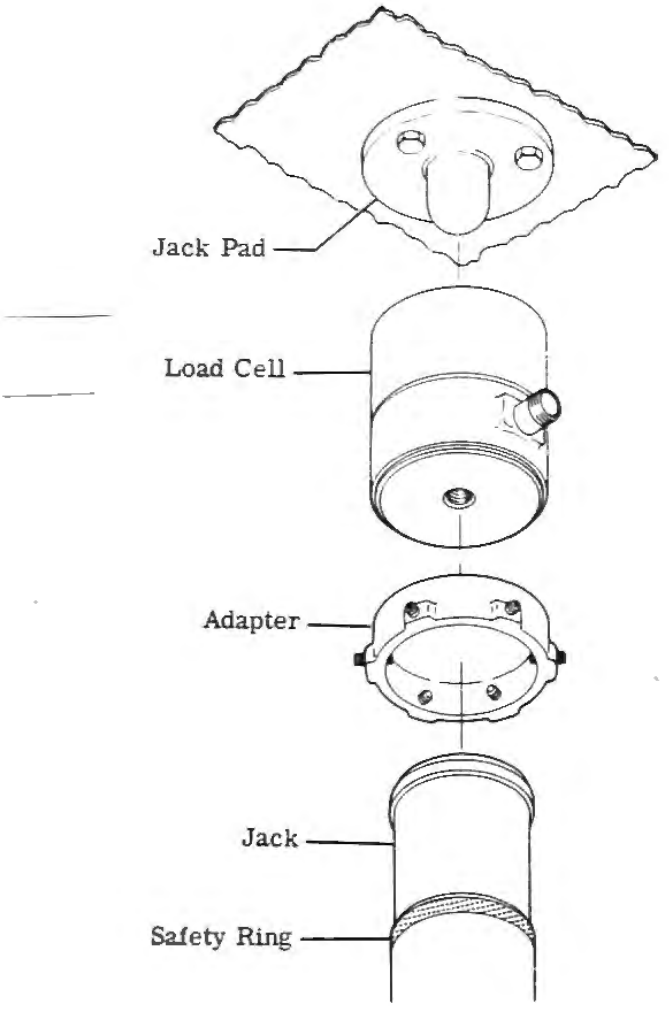

Figure 1-2C. Attaching Weighing Cell to Aircraft Jack

AIRCRAFT WEIGHING RECORD

Date Weighed	Model 23	Serial No.
Place Weighed		Weighing Personnel:

Reaction	Scale Reading	Tare	Net Weight	Arm	Moment
Left Jack					
Right Jack					
Sub Total				264.87	
Nose Jack				69.80	
Total (as weighed)					
Total Items Column I			−		
Total Items Column II			+		
Basic Airplane	(Includes Unusable Fuel)				

COLUMN I				COLUMN II			
Items weighed but not part of basic Airplane	Weight	Arm	Moment	Basic Items not in when weighed	Weight	Arm	Moment
TOTAL				TOTAL			

Figure 1-2D. Aircraft Weighing Record

FUEL SYSTEM SERVICING.

FUEL ANTI-ICE ADDITIVES. The wide range of temperatures to which jet fuels are exposed in flight results in substantial changes in the water solubility of the fuel and consequently in the amount of free water which must be coped with in some manner.

CAUTION

Military JP4 type fuel refined in the United States has anti-icing additive conforming to MIL-I-27686 blended at the refinery and no additional treatment is necessary. However, some nonmilitary JP4 type fuel does not have anti-icing additive meeting the requirements of MIL-I-27686 blended at the refinery. Any approved fuels not containing the additive must have it blended during refueling. Prior to refueling, check with the fuel supplier to determine if the fuel contains anti-icing additive.

JP-5 type fuel and kerosene must have additive blended during fueling. The required fuel additive blender is Model No. PHF-204 "Hi-Flo Prist," manufactured by Houston Chemical Corp., Pittsburgh, Pa. The additive functions as a freezepoint depressant and as a biocide. Its partitioning characteristics make it especially effective in nullifying the icing effects of small quantities of water in jet fuels. The second important characteristic of this jet fuel additive is its action as a biocidal agent which prevents fungal and bacterial growth in fuel systems and fuel tanks. Thus, when used in proper amounts, the additive provides both anti-icing and microbial growth protection in a single additive.

WARNING

"Hi-Flo Prist" may be harmful if inhaled or swallowed. Use adequate ventilation. Avoid contact with skin and eyes. If sprayed into eyes, flush with large amounts of water and then contact a physician immediately.

a. Refueling with fuel not containing anti-icing additive. Refueling rate shall be not less than 30 gpm and not greater than 60 gpm (rate may be less than 30 gpm during "topping off"). Attach blender tube clamp to refueling nozzle with end of blender tube in refueling stream. Start refueling and depress and lock trigger (with ring) on blender to full travel.

CAUTION

Assure that additive is directed into the flowing fuel stream and that the additive flow is started after fuel flow starts and is stopped before fuel flow stops. Additive flow must be maintained throughout the refueling process. Do not use less than one container (20 fl. oz.) of additive per 260 gallons of fuel or more than one container of additive per 104 gallons of fuel. Blender will discharge completely in approximately 4 minutes. Monitor blender tube to assure additive flow is maintained. Do not allow concentrated additive to contact coated interior of fuel tank or aircraft painted surfaces.

b. Concentration of additive in the fueled airplane will be approximately .09% by volume when the preceding procedure is used. Immediately after a reservicing, the concentration shall be a maximum of .15% and a minimum of .06%.

c. Procedure for checking anti-ice additive concentration. Prolonged storage of the aircraft will result in a water buildup in the fuel which "leaches out" the additive. An indication of this is when an excessive amount of water accumulates in the fuel tank sumps. The concentration can be checked using a Differential Refractometer, manufactured by The Seiscor Corporation, Tulsa, Oklahoma. It is imperative that the Technical Manual for the Differential Refractometer be followed explicity when checking the additive concentration. The minimum additive concentration shall be .035% by volume and maximum concentration shall be .15% by volume.

RECOMMENDED FUELS. Commercial kerosene and JP-4 and JP-5 type fuels are acceptable; however, when a change is made or a fuel mixture is used, the fuel control specific gravity settings must be re-adjusted in accordance with the engine Maintenance Manual (SEI-136). Assure that fuel density knob on the fuel controls is set at the correct position for the type of fuel used (JP-4 or JP-5). If fuel types are mixed, set the density knob for the type that is the larger portion of the mixture. If mixture of fuel types is about equal, no density adjustment is required. (Either density setting JP-4 or JP-5 is satisfactory.)

JP-4 Type

Arcojet B	BP A. T. G.
Caltex Jet B	Conoco JP-4
Esso Turbo Fuel B	Enco Turbo Fuel B
Mobil Jet B	Mobil Jet 4
Chevron Turbine Fuel B	Philjet JP-4
Standard Turbine Fuel B	Texaco Avjet B
Canadian Fuel 3-GP-22	Union JP-4
Aeroshell Turbine Fuel JP-4	MIL-T-5624G JP-4

ASTM Jet B Aircraft Turbine Fuel
British Fuel D Eng. R. D. 2486 AVTAG
NATO F-40 (JP-4)
NATO F-45 (JP-4)

Kerosene and JP-5 Type

Mobil Jet A; A-1; and 5	Philjet A-50
Sinclair Superjet Fuel	Arcojet A and A-1
Chevron Jet Fuel A-1	BP A. T. K.
Standard JF A and A-1	SMC
Jet A and A-1 Kerosene	Turbine Type A
Standard Turbine Fuel A-1	Caltex Jet A-1
Conoco Jet -40; 50; and 60	76 Turbine Fuel
Texaco Avjet A and A-1	Gulf Jet A and A-1
ASTM Jet A-1	MIL-T-5624G JP-5

Canadian Fuel 3-GP-23
Purejet Turbine Fuel Type A and A-1
Aeroshell Turbine Fuel 640 and 650
American Jet Fuel Type A and A-1
Esso Turbo Fuel A; A-1; and 5
Enco Turbo Fuel A; A-1; and 5
Air Total Turbine Fuel 1 and 1A
ASTM Jet A Aircraft Turbine Fuel
British Fuel D ENG. R. D. 2482 AVTUR40
British Fuel D ENG. R. D. 2494 AVTUR50
British Fuel D ENG. R. D. 2498 AVCAT48
British Fuel D ENG. R. D. 2488 AVCAT
BP AVCAT 48
Murphy Jet A
NATO F-30 (Jet A)
NATO F-34 (Jet A-1)
NATO F-35 (Jet A-1)
NATO F-42 (JP-5)
NATO F-44 (JP-5)

FUELING-GRAVITY FLOW. Fueling is accomplished through a filler in the top of each tip tank. The fuel gravity flows from the tip tanks to the wing tanks. On aircraft 23-003 thru 23-069 the L. H. electrically operated wing standby pump fills the fuselage tank when the fuselage tank switch is set to FILL. On aircraft 23-070 thru 23-099 both electrically operated wing standby pumps fill the fuselage tank when the fuselage switch is set to FILL. To fuel the aircraft proceed as follows:

Note

If the aircraft is to be serviced with JP-4 not containing anti-ice additive or any fuel other than JP-4, refer to ANTI-ICING ADDITIVES, this section, prior to fueling.

WARNING

Ground fuel truck to nose gear uplatch spacer and ground fuel nozzle to tip tank ground jack. Standard refueling safety precautions should be observed at all times.

a. Battery Switch - ON
b. MAIN DC POWER Circuit Breakers - Depressed
c. Fuselage Tank Fill Switch - ON
d. Crossflow Switch - OFF if not filling fuselage tank; ON if filling fuselage tank.

WARNING

When refueling, alternately add 150 gallons of fuel to each tip tank until the desired amount is obtained. Do not attempt to completely fill one tank before adding fuel to the opposite tank as an overbalance condition will result.

e. Fuselage Tank Fill Switch - OFF after [A] VALVE CLOSED or [B] FUS FULL light is lighted.

CAUTION

The VALVE CLOSED or FUS FULL light will not light until the refuel valve has closed. Assure that refuel valve is closed after filling the fuselage tank. An open valve will result in fuel pumped overboard through fuselage tank vent system.

f. Disconnect grounding cables and install filler caps.
g. Set Crossflow Switch to OFF.
h. Set Battery Switch to OFF.

[A] Aircraft 23-003 thru 23-014.

[B] Aircraft 23-015 thru 23-099.

DEFUELING. The aircraft is defueled by disconnecting the fuel lines at the engines and pumping the fuel into a suitable container.

WARNING

Ground fuel truck to nose gear uplatch spacer and aircraft to an approved grounding source prior to defueling. Standard safety precautions should be observed at all times.

a. Disconnect the fuel lines from engines and pump the fuel into a suitable container using the standby pumps.
b. Fuel in the fuselage tank is pumped into the wing tanks for defueling purposes.
c. Fuel from the tip tanks flows by gravity into the wing tanks.
d. Remaining fuel in the tip tanks must be siphoned.

FUEL FILTER DRAIN VALVES. A fuel filter is located in the fuel line to each engine. A drain valve, installed in the bottom of each filter is used to drain any condensation or sediment which may accumulate in the filter. Fuel filter access is through the tailcone access door.

FUEL SYSTEM DRAIN VALVES. Drain valves, located at low points throughout the fuel system, are used for draining condensation or sediment. A small amount of fuel should be drained from each valve after servicing and prior to the first flight of the day. The valves are spring-loaded to the closed position.

LUBRICATION SYSTEM SERVICING. Service the engine lubrication system only with oils from the following approved list. Do not mix oils. The oil should be filtered through a 10-micron filter prior to use.

Note

Check the oil level immediately after engine shutdown. While the engine is inoperative, oil seeps from the tank into the gearbox. A false indication of low oil supply may be obtained if the level is checked after the engine has remained inoperative for a length of time.

APPROVED OILS. See Learjet 23 Flight Manual - Oil, Section I.

ADDING OIL.

Note

If preflight inspection reveals that the oil level in the tank is low, motor the engine with the starter for 30 seconds and recheck oil level. Add oil as required. DO NOT MIX OILS. If there is no oil level indication on the dipstick, add enough oil to obtain an indication, then motor with starter. DO NOT motor the engine unless there is a positive indication of oil in the tank.

a. Remove the oil tank filler cap.
b. Check the oil level on the dipstick and add oil (which has been passed through a 10-micron filter) to bring the oil level to the FULL mark (4-quart capacity) on the dipstick. Replace and lock filler cap.

CHANGING OIL.
a. Remove the oil tank filler cap.
b. Remove drain plugs from the oil tank, accessory gearbox, and transfer gearbox; drain oil into a suitable container. Remove oil filter.

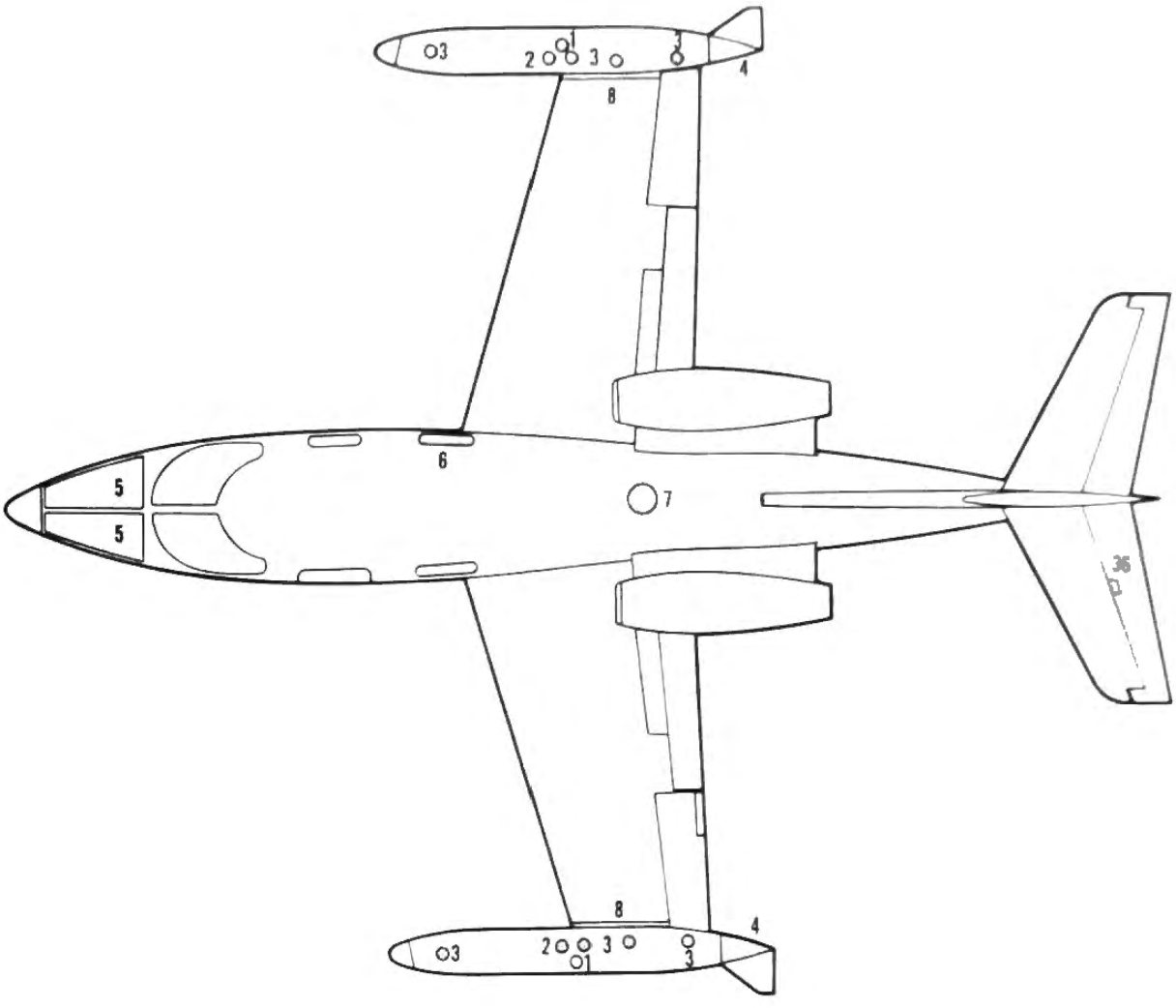

1. Fuel Filler
2. Fuel Probe
3. Tip Tank Access
4. Directisyn Flux Valve
5. Electronic Equipment, Oxygen and Air Bottles
6. Emergency Exit Window
7. Fuselage Fuel Tank Probe
8. Wing Tip Fuel and Electrical Connections
9. Vertical Stabilizer Attach Points and Controls (L. H. Side Only)
10. Nacelle Tailcone
11. Nacelle Bottom Section
12. Nacelle Nose Cap
13. Nacelle Top Section
14. Rudder Hinge and Rudder Tab Actuator
15. Stabilizer Actuator
16. Tip Tank Fuel Pump
17. Rudder Attach Points
18. Rudder Hinge and Balance Weights
19. Wing Fuel Tank (Typical Both Wings)
20. Aileron Controls
21. Aileron Actuator and Hinges
22. Fuel Vent Lines
23. Wing Flap Bellcrank and Spoiler Actuator
24. Cables and Pulleys
25. Batteries, Electrical Components, Fuel Filters, Refrigeration Equipment, and Hydraulic Components
26. Fuel Lines and Sump Drain
27. Wing Tank Fuel Pumps
28. Elevator Controls (L. H. Side Only)
29. Horizontal Stabilizer Attachment
30. Cabin Door
31. Fuel Vent Lines
32. Fuel Shutoff Valves
33. Pulleys and Fuel Lines
34. Hydraulic Lines and Wing Fuel Tanks
35. Fuel Lines and Drain
36. Elevator Hinge

Figure 1-3. External Access and Inspection Provisions (Sheet 1 of 2)

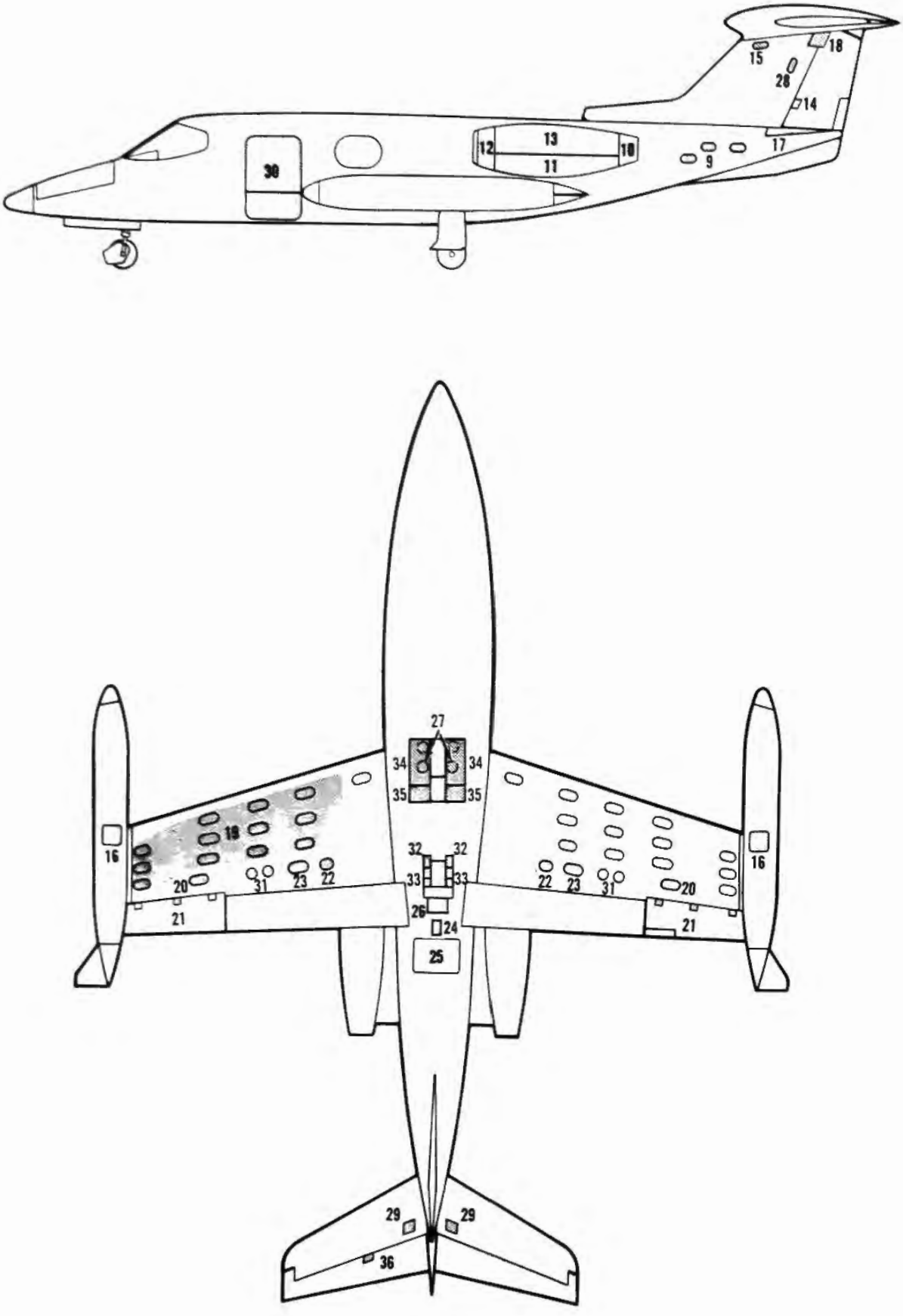

Figure 1-3. External Access and Inspection Provisions (Sheet 2 of 2)

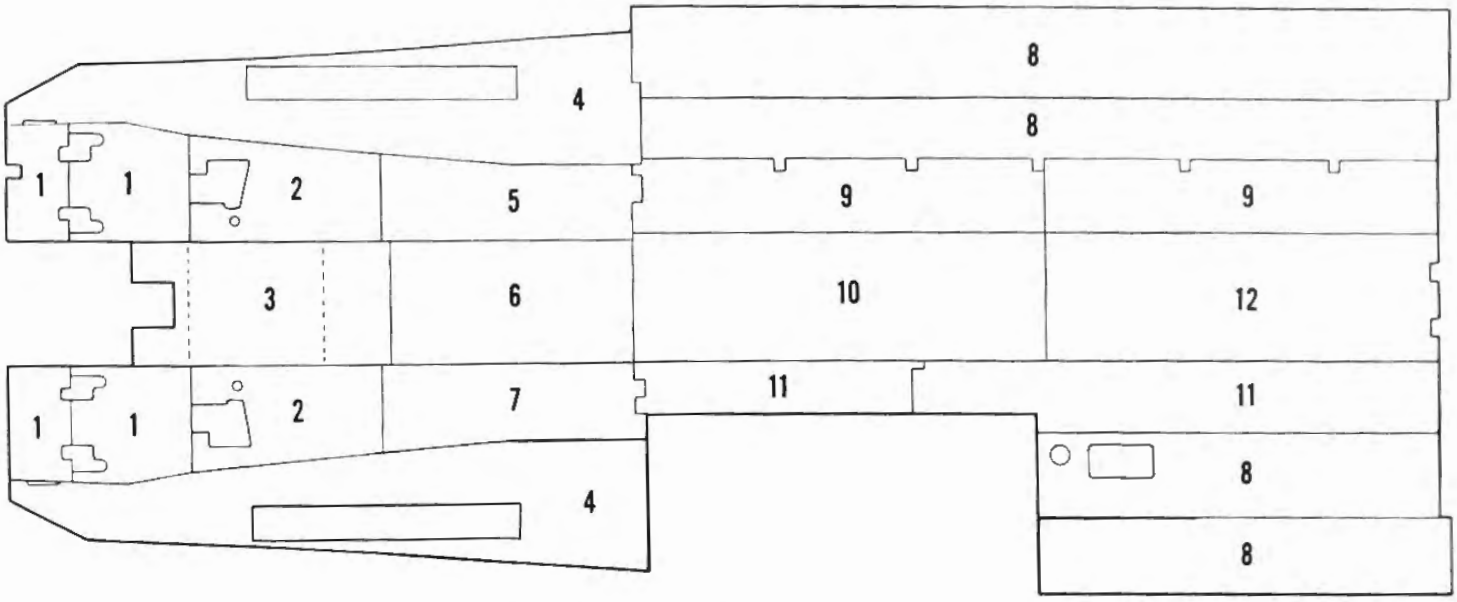

FLOORBOARDS AND INNER SKIN

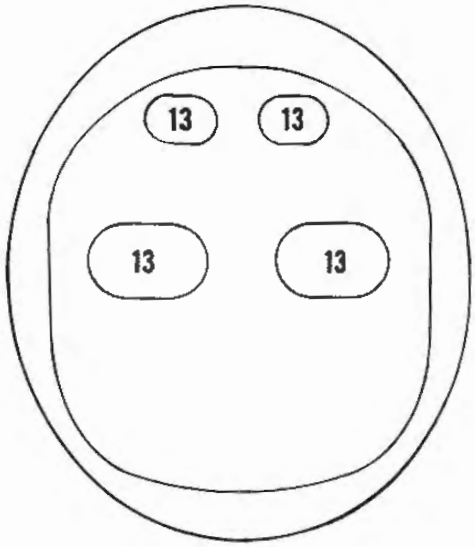

FRAME 24

1. Brake Valve and Rudder Pedal Linkage
2. Control Cables, Pulleys and Hydraulic Lines
3. Controls Sector
4. Hydraulic Lines - Inner Skin
5. Brake System Shuttle Valves
6. Control Cables, Pulleys and Roll Servo
7. Parking Brake Control Valve
8. Cabin Air Distribution Ducts - Inner Skin
9. Hydraulic Lines
10. Control Cables, Pulleys and Aileron - Rudder Interconnect
11. Hydraulic Lines, Emergency Air Lines, and Freon System Line
12. Control Cables, Pulleys and Anti Collision Beacon
13. Fuselage Fuel Cell

Figure 1-4. Internal Access and Inspection Provisions.

c. Examine magnetic drain plugs, filter, and drained oil for metallic particles. If metallic particles are present, perform a metallic particle check. (Refer to METALLIC PARTICLE CHECK, this section.) If metallic particles are not evident, proceed with step d.

d. Clean the oil filter as follows:

1. Clean filter element in carbon tetrachloride, trichlorethylene, kerosene, or an equivalent solvent.
2. Blow out excess solvent with filtered compressed air assuring that no dirt particles have collected in the filter.
3. Inspect the filter; if not completely clean, repeat steps 1 and 2 until sloshing in clean solvent produces no contamination in the solvent.

e. Clean the drain plugs with a suitable solvent such as carbon tetrachloride, trichlorethylene, or kerosene.

f. Install new O-rings on the drain plugs and filter and reinstall.

g. Using the same brand and type of oil that is presently in the system, fill oil tank to FULL mark on dipstick. Reinstall and lock filler cap.

Note

The engine will require additional oil after the first run to bring the level to the FULL mark on the dipstick as a small amount of oil remains in the sumps and oil lines after engine shutdown.

FLUSHING LUBRICATING SYSTEM. When servicing engines with a type of oil other than that with which they were previously serviced, the lubrication system shall be flushed as follows:

a. Remove the oil tank filler cap.

b. Remove drain plugs from oil tank, accessory gearbox, and transfer gearbox. Catch draining oil in a suitable container.

c. Inspect drain plugs and filter. (Refer to CHANGING OIL, this section.) Reinstall drain plugs.

d. Using an approved oil, fill oil tank (passing oil through a 10-micron filter) to FULL 4-quart mark on dipstick. Install filler cap and lock.

e. Operate engines for 5 minutes, then drain oil tank and gearboxes.

f. Install drain plugs and fill oil tank. (Refer to CHANGING OIL, this section.)

g. After engines have been operated in service for 15 to 35 hours, check the oil filter and clean as required. (Refer to METALLIC PARTICLE CHECK, this section.)

h. Attach a metal tag to the oil tank filler cap that designates the type and brand of oil being used in the system.

METALLIC PARTICLE CHECK. See General Electric CJ610 Operational Maintenance Manual SEI-136.

LUBRICATION REQUIREMENTS. Lubricate the aircraft in accordance with figure 1-6.

EXTERNAL POWER RECEPTACLE. The external power receptacle is located on the underside of the aircraft fuselage immediately forward of the tailcone access door. It is a standard AN receptacle connected directly to the starter bus by three cables.

SERVICING OF NOSE GEAR SHOCK STRUT. (See figure 1-5.) Prior to servicing, strut must be fully compressed with aircraft full of fuel, without baggage, crew, or passengers.

CAUTION

The importance of proper nose gear strut servicing cannot be overemphasized. Overfilling with hydraulic fluid or underinflation can result in improper straightening after liftoff or jamming of the nose wheel in the retracted position.

a. [A] Remove cap from air valve and depress valve pin until all air pressure is released from strut. [B] Remove cap from air valve and loosen end nut 3/4 of a turn to release air pressure.

WARNING

Do not release air by loosening or removing air valve. Failure to comply can cause bodily injury.

b. After all air is released, remove air valve.

c. With aircraft resting on landing gear, fill strut with clean MIL-H-5606 hydraulic fluid to level of air valve port.

d. [A] Replace air valve and packing. Torque air valve to 350 inch-pounds. [B] Replace air valve cap and tighten securely.

Note

Prior to inflation, the strut must be fully compressed with the top of the red band touching the upper cylinder.

e. Normal Strut Inflation. With aircraft resting on landing gear, inflate strut with dry compressed air or nitrogen until upper edge of red band is 5 1/2 (±1/4) inches from upper cylinder.

f. Alternate Strut Inflation. Jack nose wheel clear of ground and inflate strut with dry compressed air or nitrogen to 39 (±3) psi.

[A] Aircraft 23-003 thru 23-025.

[B] Aircraft 23-026 thru 23-099.

GATES LEARJET

MODEL 23

Service Manual

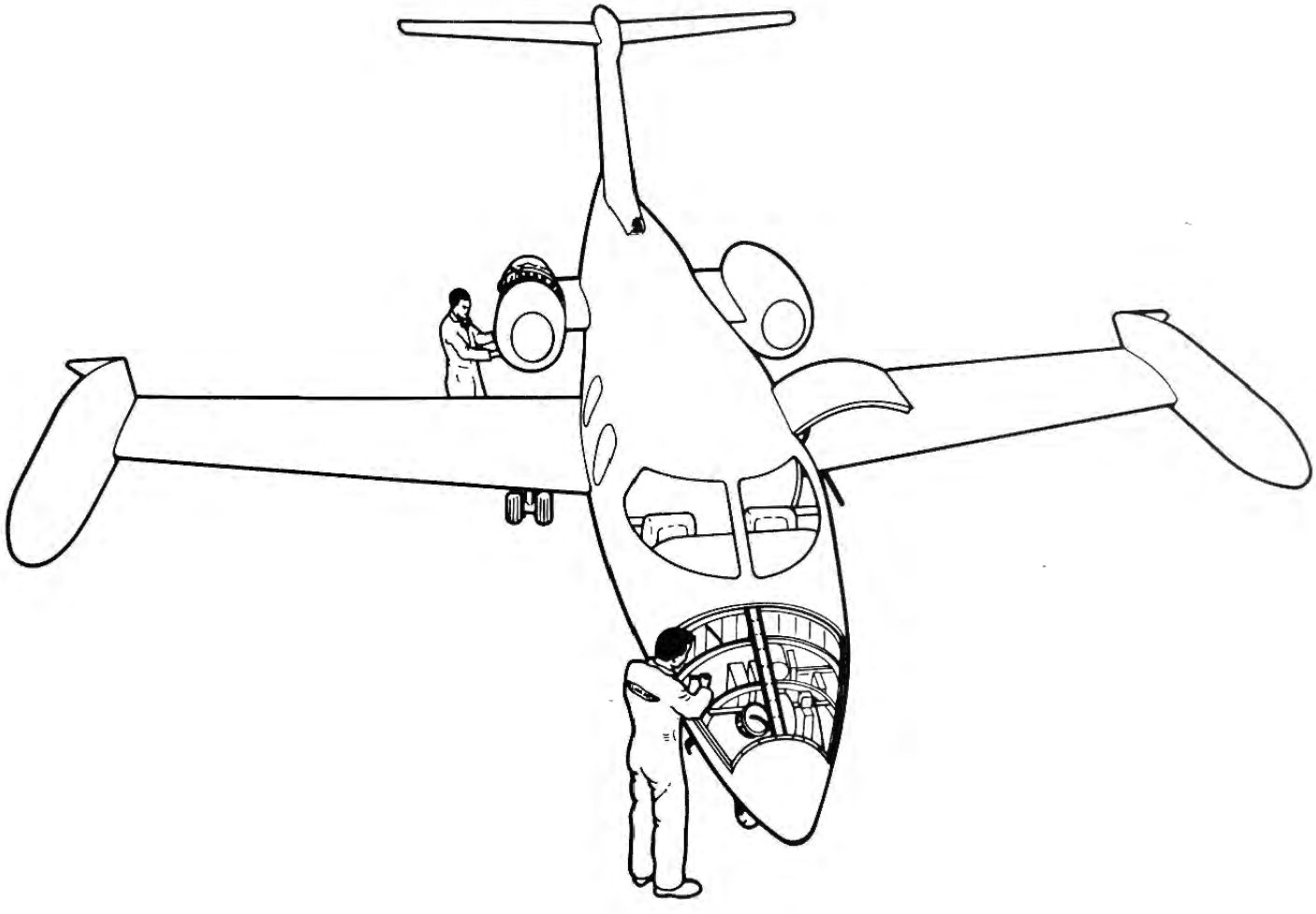

This change incorporates all Model 23 Temporary Service Manual changes dated prior to 17 October 1975 which should be removed from this manual.

1 MAY 1967

Changed 17 October 1975

Note

A For strut inflation, remove cap on air valve only.
B Remove cap from air valve and loosen end nut 3/4 of a turn for strut to receive air charge. After inflation, tighten end nut and reinstall cap.

SERVICING OF MAIN GEAR SHOCK STRUT. (See figure 1-5.) Prior to servicing, strut must be fully compressed with aircraft full of fuel, without baggage, crew, or passengers.

a. Remove cap from air valve and loosen end nut 3/4 of a turn to release all air from strut.

WARNING

Do not release air by loosening or removing air valve. Failure to comply can cause bodily injury.

b. After all air is released, remove air valve from strut.

A Aircraft 23-003 thru 23-025

c. With aircraft resting on landing gear, fill strut with clean MIL-H-5606 hydraulic fluid through air valve port until overflow exists.

d. Reinstall air valve and tighten securely.

Note

Prior to inflation, the strut must be fully compressed with the upper end of the axle socket touching the cylinder.

e. Normal Strut Inflation. With aircraft resting on landing gear, inflate strut with dry compressed air or nitrogen until upper edge of axle socket is 3 1/4 (±1/4) inches from cylinder.

f. Alternate Strut Inflation. Jack main landing gear clear of ground and inflate strut with dry compressed air or nitrogen to 223 (±10) psi.

Note

For strut inflation, remove cap from air valve and loosen end nut 3/4 of a turn for strut to receive air charge. After inflation, tighten end nut and reinstall cap.

B Aircraft 23-026 thru 23-099

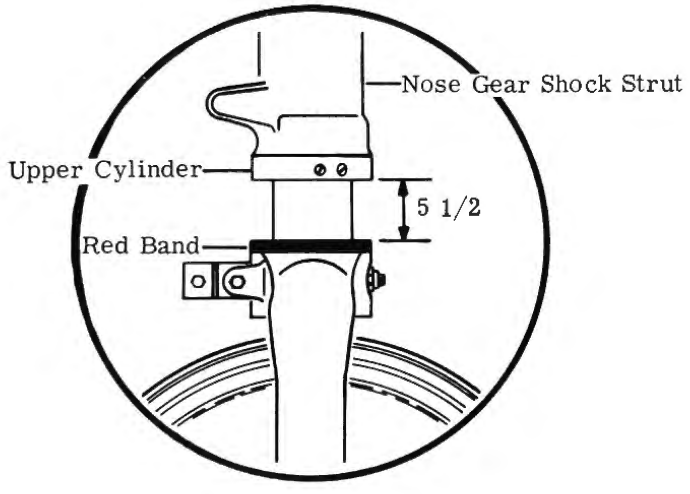

NOSE GEAR

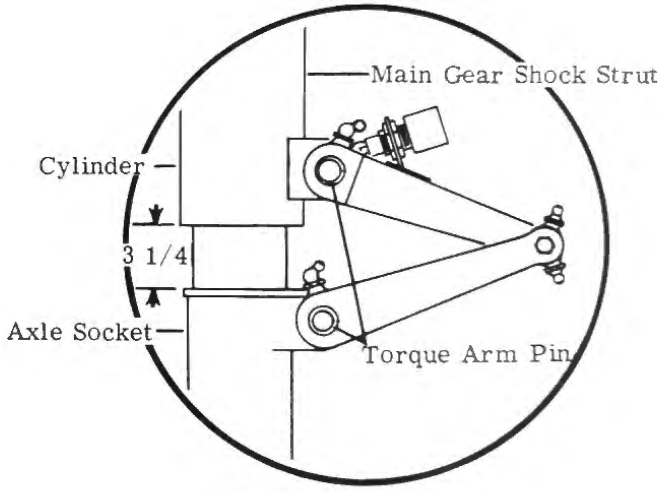

MAIN GEAR

Figure 1-5. Servicing Landing Gear Shock Struts

SPECIAL SERVICE NOTES

FITTINGS: Clean before lubricating. Lubricate until new grease appears at point being lubricated.

LANDING GEAR DOOR HINGES: Lubricate hinges, then wipe off excess oil.

ENGINE OIL RESERVOIRS: Check oil immediately after each flight and add oil if necessary. Reference General Electric Manual SEI-186 for oil change interval.

SEAT RAILS: Rub rails with paraffin wax for ease of seat rail operation as required.

AILERON BRUSH SEALS: Apply a thin coat of Dow Corning No. 33 grease (light consistency) to brushes every 300 hours.

NOSE AND MAIN GEAR AXLES: At each 1200 hours, clean axles and inspect for corrosion. Apply MIL-G-81322 grease to external surfaces. On nose gear axle apply zinc chromate primer to internal surfaces. On main gear axle apply Rust-oleum to internal surfaces.

APPLICATION SYMBOLS

Oil Can Zerk Filler Can Hand

FREQUENCY SYMBOLS

-150 Hours or 6 Months

-150 Hours & Every Tire Change

-6 Months

-On Installation And As Required

-600 Hours

-150 Hours

TABLE OF LUBRICANTS

Symbol	Military Specification	Type of Lubricant
CSP	------	FEL-PRO C-5 High Temperature Thread Compound (Feld Products Mfg. Co., Chicago 7, Illinois)
GHT	MIL-G-81322	Grease, Aircraft, General Purpose, Wide Temperature Range
OHA	MIL-H-5606	Hydraulic Fluid, Petroleum Base, Aircraft and Ordnance
OGP	MIL-L-7870	Lubricating Oil, General Purpose Low Temperature
GG	MIL-G-7187	Grease, Lubricating Graphite
✸	------	Plastilube Molly No. 3 (manufactured by Warren Refining Co., Cleveland, Ohio) or Molylube 503 grease (manufactured by Bel-Ray Co., Inc., P. O. Box 526, Farmingdale, N. J. 07727)
*	------	LPS3 (manufactured by LPS Research Laboratories, Inc, Los Angeles, Calif.)

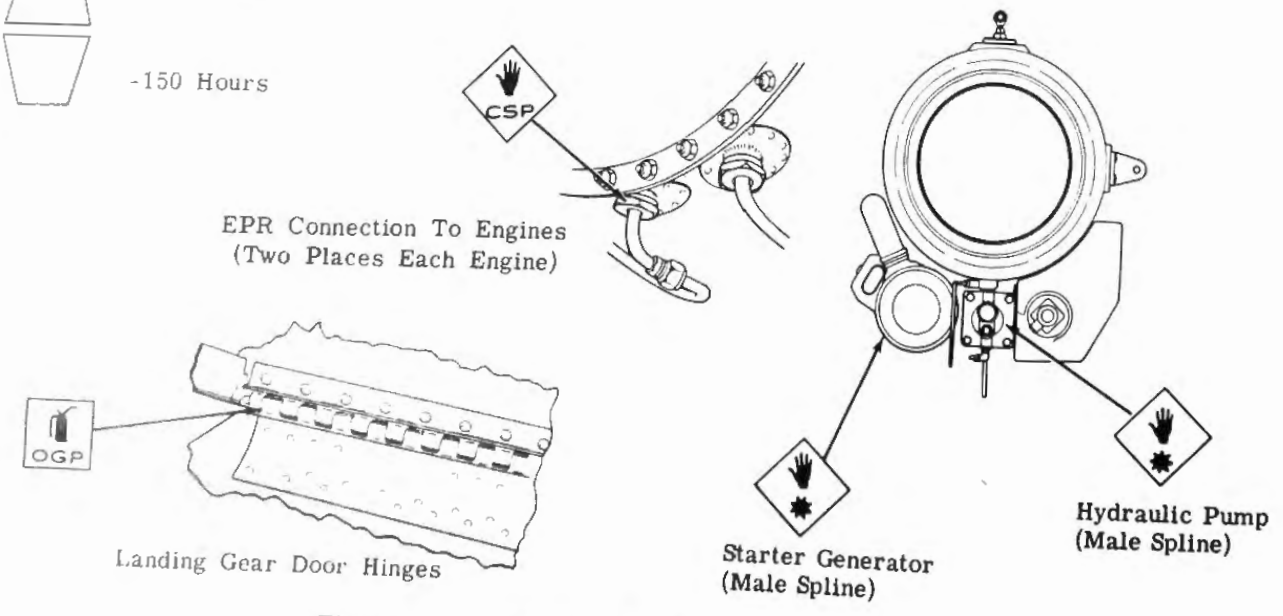

Figure 1-6. Lubrication Requirements (Sheet 1 of 3)

Learjet Temporary Service Manual Revision

SERVICE MANUALS AFFECTED: Gates Learjet Models 23, 24, and 24B.

NOTE: This Temporary Revision supersedes the Temporary Revision, same location, dated February 18, 1977.

FILING INSTRUCTIONS: Insert as listed below and retain until further notice.

Model 23 - Insert adjacent to page 1-12.
Model 24 - Insert adjacent to page 1-11.
Model 24B - Insert adjacent to page 1-11.

REASON: To add lubrication requirement.

INSTRUCTIONS: Revise the portion of the lubrication requirements figure shown below.

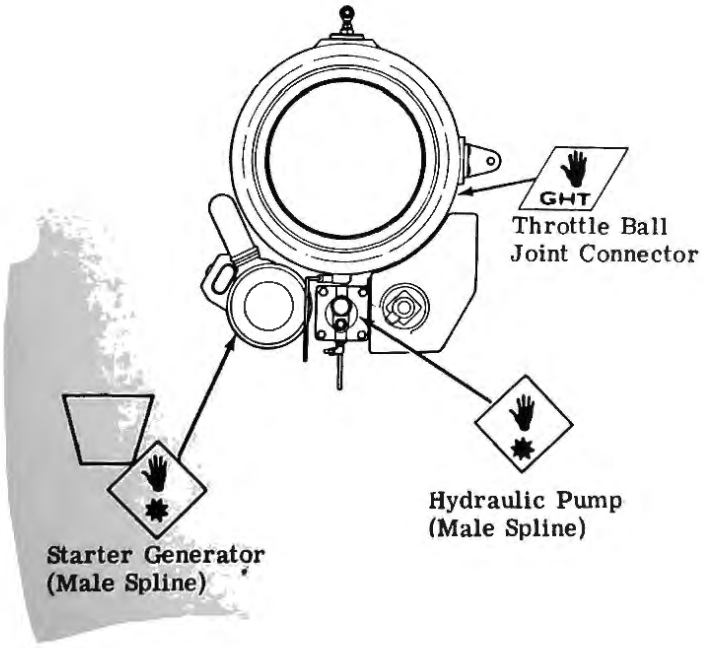

April 1, 1977

Learjet Temporary Service Manual Revision

SERVICE MANUALS AFFECTED: Gates Learjet Models 23, 24, 24B, 24D/E/F, 25 and 25B/C/D/F including United Kingdom 25B/C/D/F.

FILING INSTRUCTIONS: Insert as follows and retain until further notice.

Model 23	- Insert adjacent to page 1-12.
Model 24	- Insert adjacent to page 1-11.
Model 24B	- Insert adjacent to page 1-11.
Model 24D/E/F	- Insert adjacent to page 1-20.
Model 25	- Insert adjacent to page 1-13.
Model 25B/C/D/F	- Insert adjacent to page 1-19.

REASON: To add lubrication requirement.

INSTRUCTIONS: Add the following to the lubrication requirements figure.

-300 Hours

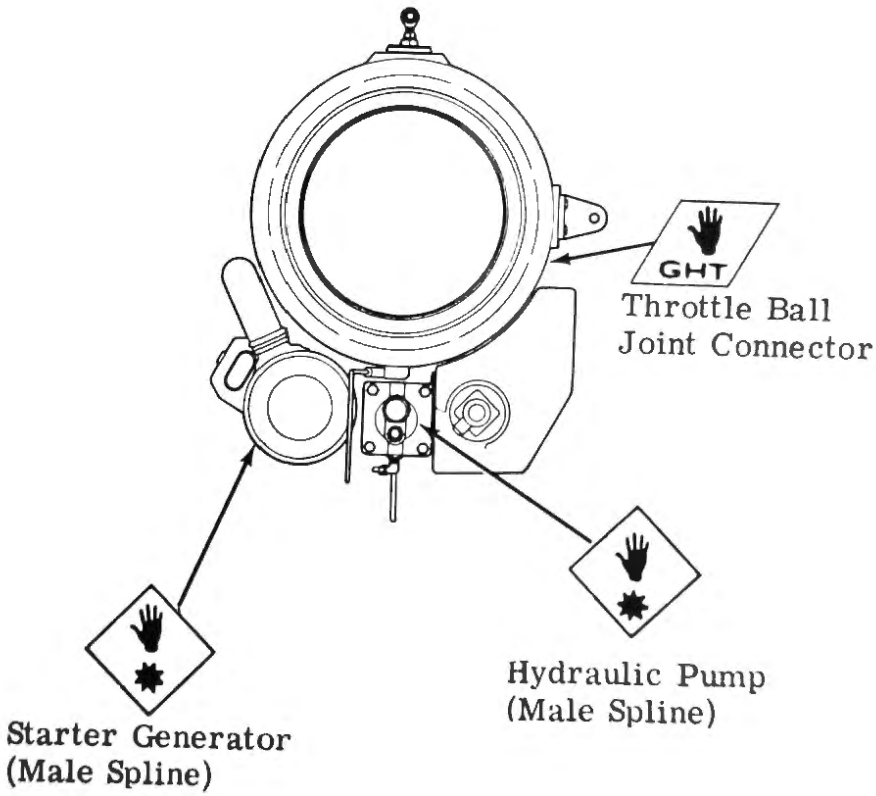

February 18, 1977

Learjet Temporary Service Manual Revision

SERVICE MANUALS AFFECTED: Gates Learjet Models 23, 24, 24B, 25, 24D/E/F and 25B/C/D/F including United Kingdom 25B/C/D/F.

NOTE: This Temporary Revision supersedes the Temporary Revision dated January 12, 1977 (same subject) which should be destroyed.

FILING INSTRUCTIONS: Insert this Temporary Revision as listed below and retain until further notice.

Model 23	- Insert adjacent to page 1-23.
Model 24	- Insert adjacent to page 1-23.
Model 24B	- Insert adjacent to page 1-24A.
Model 25	- Insert adjacent to page 1-25.
Model 24D/E/F	- Insert adjacent to page 1-31.
Model 25B/C/D/F	- Insert adjacent to page 1-30.

REASON: Revise text to include visual inspection and hydrostatic test.

INSTRUCTIONS: Revise text as follows:

EMERGENCY AIR BOTTLE SERVICING. (See figure 1-15C, Model 24B; figure 1-17A, Model 25; figure 1-22, Model 24D/E/F; figure 1-21, Model 25B/C/D/F.)

The emergency air bottle furnishes emergency pressure to extend the landing gear and for emergency braking in case of hydraulic or electrical failure. The bottle is located in the nose section and is accessible through the nose compartment access doors. The bottle is to be serviced with dry air or nitrogen to between 1800 and 3000 psi. Bottle pressure is indicated by a pressure gage on the instrument panel. Assure that dry air or nitrogen is used to service the emergency air bottle. Moisture in the system can cause failure during exposure to extremely low temperatures. In accordance with current inspection intervals, Section VIII, the bottle must be inspected and tested to insure serviceability.

Charging Emergency Air Bottle

a. Remove right nose compartment access door.
b. Remove cap from emergency air bottle air valve.
c. Attach high pressure adapter to air valve and loosen valve end nut.
d. Monitor emergency air gage on instrument panel and pressurize the emergency air bottle to 1800 to 3000 psi.
e. Tighten air valve end nut and remove high pressure adapter.
f. Install air valve cap and replace nose compartment access door.

Visual Inspection of Emergency Air Bottle

Inspect interior surface paying close attention to surface condition and in particular, any evidence of corrosion. Any visible cracking or flaking of the coating or evidence of corrosion is cause for removing container from service. Isolated cracks or corrosion appearing as a fine line may be an indication of stress weakening of the base metal. Any containers showing evidence of stress weakening should be returned to the manufacturer for reinspection. Any corrosion causing a decrease in wall thickness of .005 inches from original wall thickness is considered severe corrosion and cause for removal of container from service.

Note

Removal of paint is desirable for exterior visual inspection.

a. Inspect exterior for bulging, dents, corrosion, mechanical defects and general condition.
b. Any bulging of the container is cause for rejection.
c. Severe dents are cause for rejection.
d. Any corrosion causing a decrease in wall thickness of .005 inches from original wall thickness is considered severe corrosion and cause for removal of container from service.
e. Mechanical defects include scratches, cuts, digs and gouges and are cause for rejection if they are not superficial in nature. Containers must be rejected if the wall thickness has been reduced by mechanical defects by more than 5% of wall thickness.

Hydrostatic Test of Emergency Air Bottle

a. Hydrostatic testing is accomplished by subjecting the emergency air bottle to five-thirds times the service pressure. The test shall be performed in a water jacket and the total and permanent volumetric expansions recorded. The permanent expansion must not exceed 10% of the total expansion.
b. Perform a radiographic inspection of the container following hydrostatic test. If cracks are found the container shall be removed from service and destroyed.
c. Magnetic particle inspection may also be performed if desired.

WARNING

Do Not steel stamp the pressure vessel itself. Only the fitting boss should be stamped. Assure that fitting boss is not stamped in the radius where it is connected to the bottle.

d. After emergency air bottle has passed inspection and test it must be permanently marked (stamped into metal) with the month and year. This marking must be on the fitting boss and not the actual container.

Learjet Temporary Service Manual Revision

SERVICE MANUALS AFFECTED: Gates Learjet Models 23, 24, 24B, 24D/E/F, 25 and 25B/C/D/F including United Kingdom 25B/C/D/F

FILING INSTRUCTIONS: Insert adjacent to page 8-13 and retain until further notice.

REASON: To add inspection and lubrication requirement.

INSTRUCTIONS: Under L. ENGINE INSPECTION, add item 4 as follows:

INTERVAL			APPROVAL		
75	150	300	MECH	INSP	
		X			4. Remove ball joint connector from engine end of throttle cable (RH & LH). Clean ball joint with solvent and inspect for excessive binding or wear. Pack threaded hole of ball joint connector with MIL-G-81322 grease and screw connector back onto throttle cable. Assure that grease is forced around ball. Check throttle cable rigging and safety wire jamnut.

February 18, 1977

Learjet Temporary Service Manual Revision

SERVICE MANUALS AFFECTED: Gates Learjet Models 23, 24B, 24D, 25 and 25B/C Including United Kingdom 25B/C.

FILING INSTRUCTIONS: Insert adjacent to page as listed below and retain until further notice.

Model 23 - File adjacent to page 1-12.
Model 24B - File adjacent to page 1-11.
Model 24D - File adjacent to page 1-20.
Model 25 - File adjacent to page 1-13.
Model 25B/C - File adjacent to page 1-19.

REASON: To delete Plastilube Molly No. 3 and Molylube 503 and replace with Mobil No. 29 and Braycote 664S.

INSTRUCTIONS: Revise Table of Lubricants as follows:

OHA	MIL-H-5606	Hydraulic Fluid, Petroleum Base, Aircraft and Ordnance
OGP	MIL-L-7870	Lubricating Oil, General Purpose Low Temperature
*	------	Mobil Grease No. 29 or Braycote 664S (Bray Oil Co.)
*	------	LPS3 (manufactured by LPS Research Laboratories, Inc, [illegible])

December 1, 1975

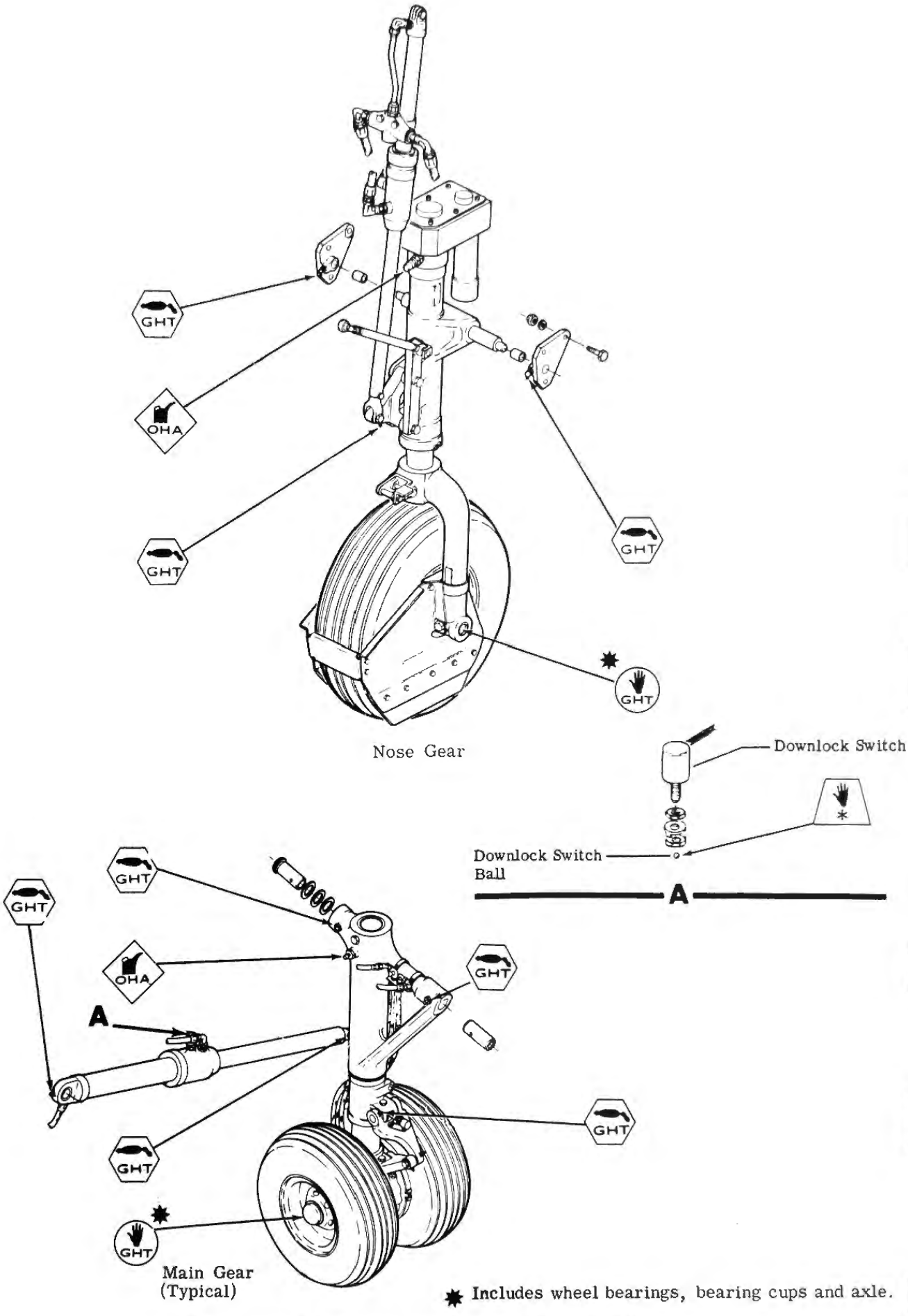

Figure 1-6. Lubrication Requirements (Sheet 2 of 3)

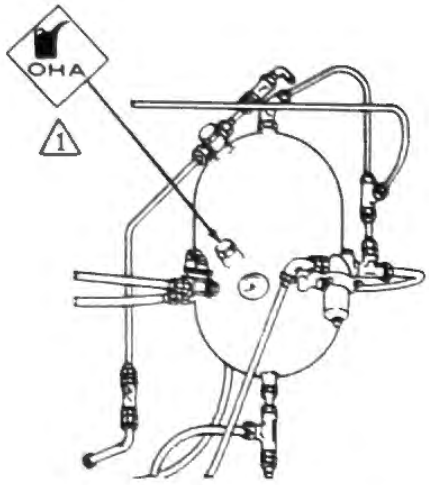

Hydraulic Reservoir

1 Check On Postflight Inspection

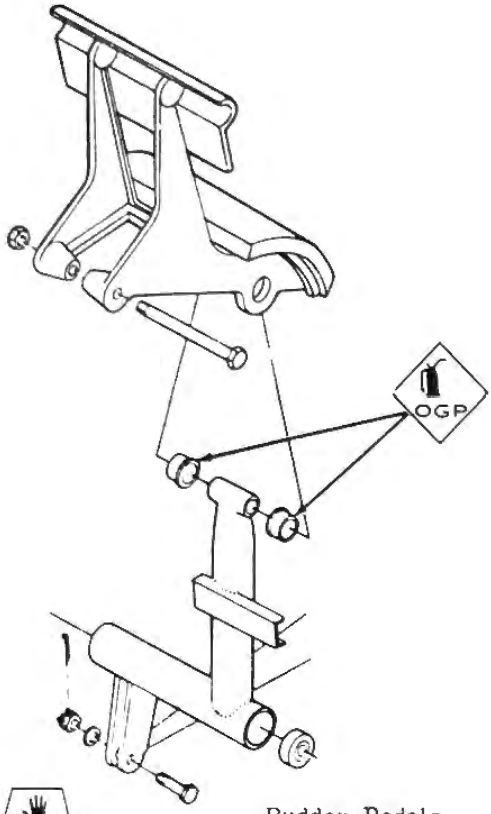

Rudder Pedals (Typical)

Note

Cables to be lubricated at all pulley and pressure seal interfaces. Applicable all flight controls.

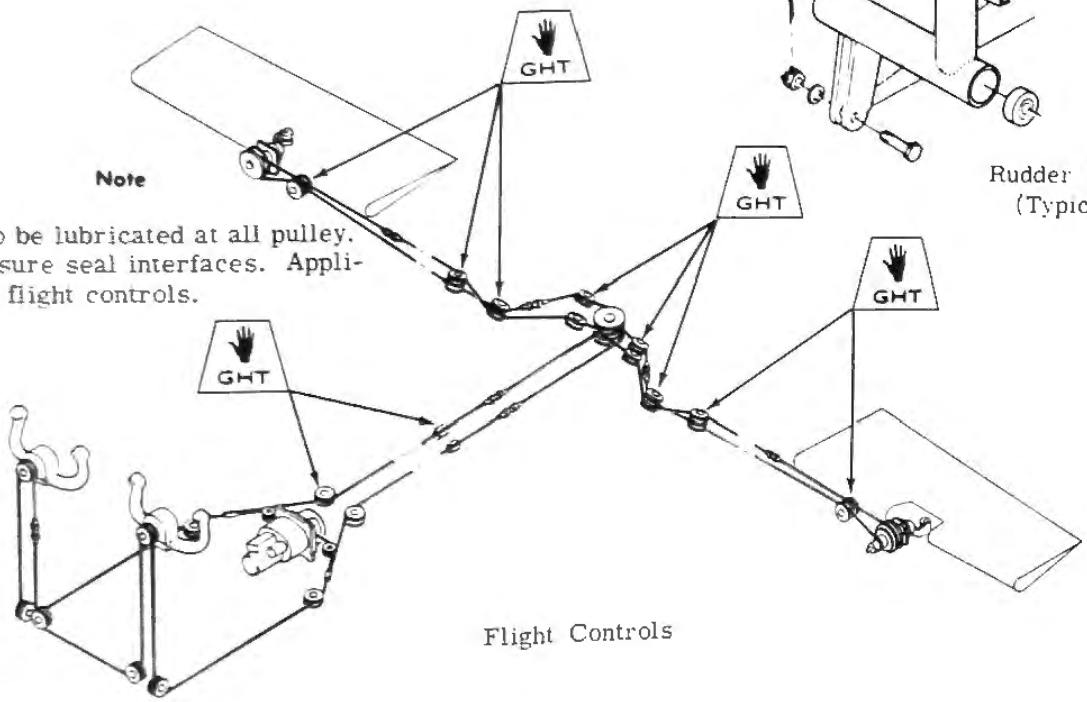

Flight Controls

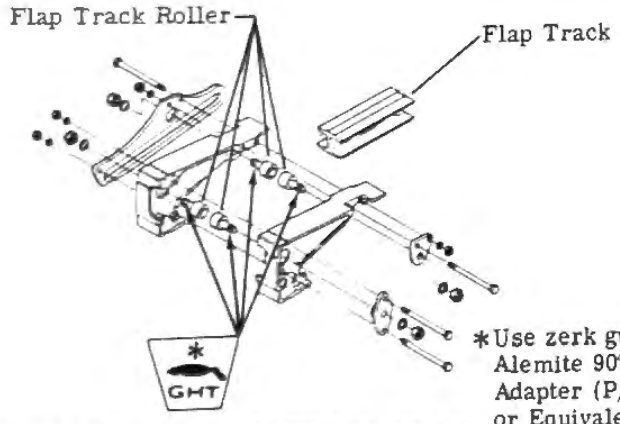

OUTBOARD FLAP TRACK ASSEMBLY

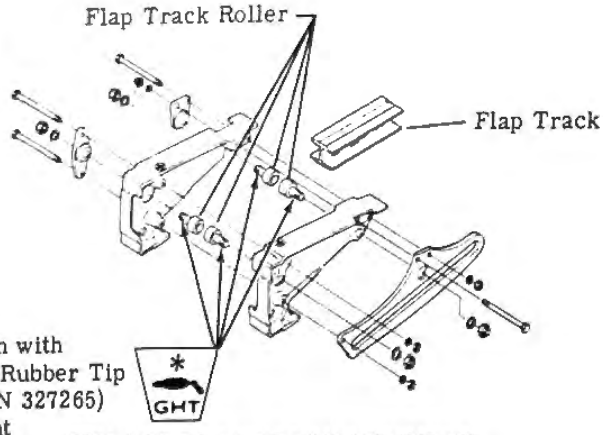

INBOARD FLAP TRACK ASSEMBLY

*Use zerk gun with Alemite 90° Rubber Tip Adapter (P/N 327265) or Equivalent

TYPICAL BOTH WINGS

Figure 1-6. Lubrication Requirements (Sheet 3 of 3)

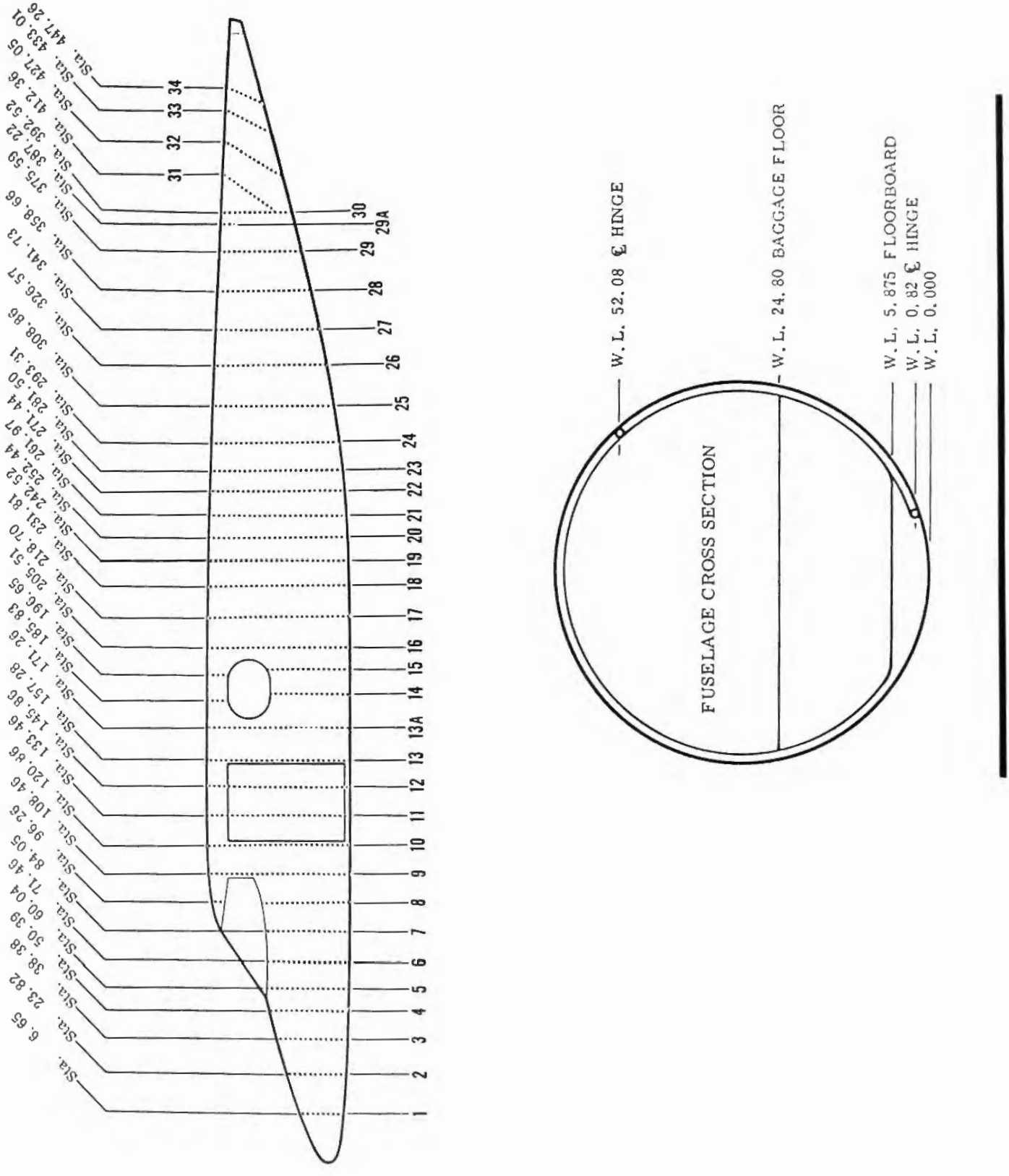

Figure 1-7. Fuselage Stations, Frames and Water Lines Diagram

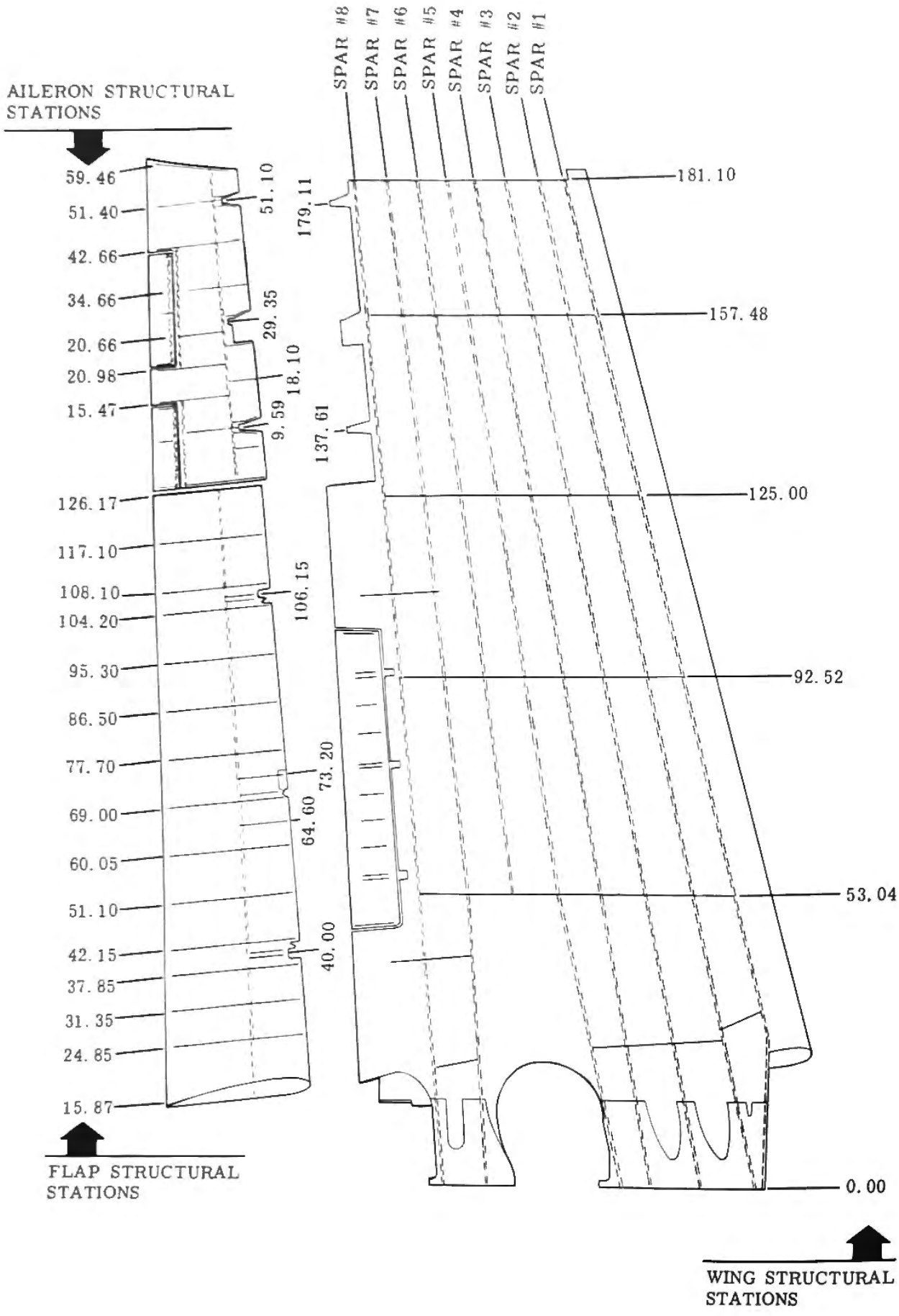

Figure 1-8. Wing Assembly Structural Stations

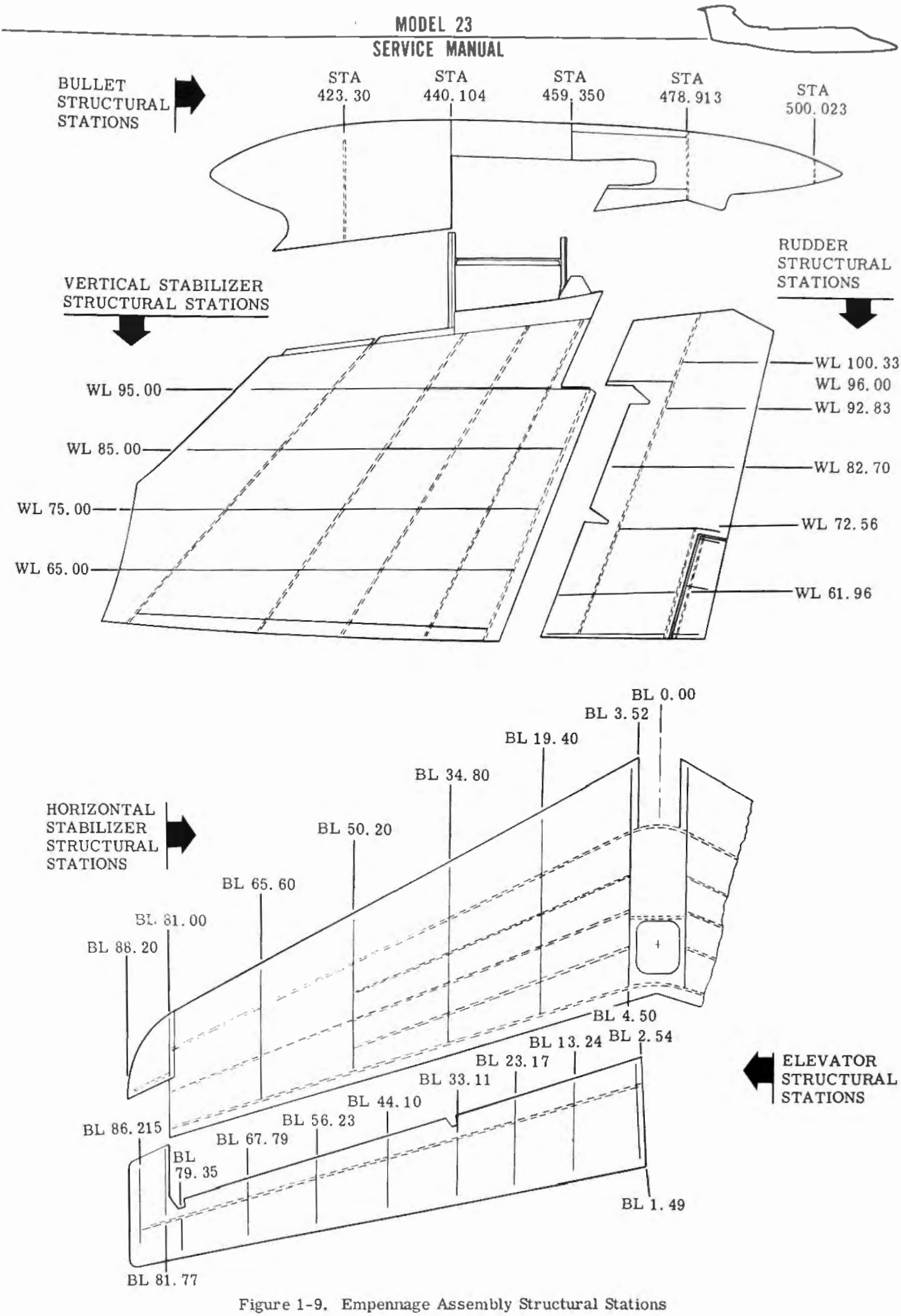

Figure 1-9. Empennage Assembly Structural Stations

SERVICING TIRES. The landing gear tires should be inflated to the following pressure using dry air or nitrogen.

a. Nose Wheel
   1. Standard tire 65 (±5) psi
   2. Chined tire 105 (±5) psi

b. Main Wheel
   1. Eight ply rated 105 (±5) psi
   2. Ten ply rated 115 (±5) psi

TIRE WEAR LIMITS.

a. Main and nose tire wear limits (except chined tires): Inspect treads visually or with a depth gage. The tire should be removed when the tread has worn to the base of any groove at any location. Tires can be considered safe as long as the casing plies are not exposed.

b. Chined tire wear limits: If it is not planned to retread the tire, the tread may be worn down to the cord under the tread. However, a smooth nose tire will more readily hydroplane than a tire that has tread. If a tire is to be retreaded, it should be removed from service before the cords are exposed.

SERVICING BATTERIES. The aircraft is equipped with two 22 ampere-hour batteries, manufactured by either Gulton Industries, Inc. or Marathon Battery Co. (formerly Sonotone Corporation). The batteries are of the sintered plate, nickel cadmium type and are located in the tailcone. For information not covered in this manual, the following publications are available:

Marathon Battery Instruction Manual, Publication No. BA-89; Marathon Battery Company, 8301 Imperial Drive, P. O. Box 8233, Waco, Texas, 76710.

Gulton Battery Instruction Manual, Publication No. ABD1100; Battery Division, Gulton Industries, Inc., Metuchen, New Jersey, 08840.

BATTERY MAINTENANCE PRECAUTIONS.

a. The batteries are alkaline type and require absolute internal cleanliness. Avoid any contamination.

CAUTION

Do not use any tools, jars, or instruments in common with acid batteries. Acid and alkali do not mix.

b. Alkaline electrolyte has a strong corrosive effect on most metals. In case of spills, immediately neutralize area with either a solution of six ounces of boric acid to one gallon water or a solution of one part vinegar to three parts water. Do not flush with water prior to neutralizing as this will only enlarge the area of contamination. Do not neutralize battery.

c. Alkaline electrolyte is harmful to human skin. If a splash occurs, immediately rinse area with water then neutralize with either a solution of six ounces boric acid to one gallon water or a solution of one part vinegar to three parts water followed by washing with soap and water. Remove contaminated clothing to prevent slow burns to skin. If electrolyte gets into eyes, wash with boric acid solution (six ounces to one gallon water) and consult physician. Be sure to advise the physician that the electrolyte was alkali and not acid.

d. Do not use a wire brush to clean cells. Use a bristle brush and water. Remove batteries from aircraft when using water.

LIQUID LEVEL CHECK.

a. Remove vent plugs.

b. Check for proper electrolyte level (1/8" to 1/4" on Marathon batteries and 1/2" to 3/8" on Gulton batteries) and adjust if required. Use only distilled water for liquid level adjustment. Tap water may contaminate batteries.

Note

When servicing the batteries, do not confuse the LIQUID LEVEL CHECK with CHECKING ELECTROLYTE SPECIFIC GRAVITY. Perform liquid level check 2 to 24 hours after battery has been fully charged.

BATTERY CLEANING.

a. Remove batteries from aircraft. (Refer to Section VII.)

CAUTION

In order to avoid shorting resulting in possible cell damage, it is recommended that the batteries be discharged prior to disassembly for cleaning.

b. Discharge batteries through a resistance high enough to permit the current to flow at 10 or less amperes. When battery voltage has dropped to a sufficiently low point that the current has apparently ceased to flow, the battery can be considered discharged.

CAUTION

Under no circumstances should a wire brush be used for cleaning. Use a bristle brush. When cleaning batteries, use extreme care to prevent this material from coming into contact with the eyes. Protective clothing such as rubber gloves, an apron and face shield should be worn.

c. Remove any white deposits (potassium carbonate) from top of cells and case with a bristle brush.

d. Remove cell connections to permit cell removal from the battery case. During removal, connecting hardware should be marked to insure proper reinstallation.

e. Remove cells from case. Assure that vent plugs are tight.

f. After washing cells with tap water and drying, inspect for cracks and leaks. Store cells in a dry, clean area.

Learjet Temporary Service Manual Revision

SERVICE MANUALS AFFECTED: Gates Learjet Models 23, 24 and 25.

FILING INSTRUCTIONS: Insert adjacent to page as listed below.

Model 23 - Insert adjacent to page 1-18.
Model 24 - Insert adjacent to page 1-15.
Model 25 - Insert adjacent to page 1-16A.

REASON: To expand and clarify tire servicing.

INSTRUCTIONS: Revise SERVICING TIRES to read as follows:

SERVICING TIRES.

a. The nose wheel is equipped with either a chined tire or a standard tire. The chined tire is an 18 x 4.4 tubeless 10-ply rated tire. The standard tire is an 18 x 5.5 tire.

b. The main wheel tires are 18 x 5.5 tubeless, 8-ply or 10-ply rated.

c. Tire pressures are affected by temperature. Therefore tire pressure should not be checked unless the tires are at ambient temperature. An ambient temperature change of 5°F (2.75°C) will affect a tire pressure change of 1%. Temperature-pressure changes should be kept in mind particularly when the aircraft is parked in a hot hangar and is rolled onto a cold runway.

d. Newly mounted tires, for several reasons, will lose air pressure after the initial inflation. It is recommended that a tire not be installed for 12 hours after initial inflation. New tires may lose as much as 10% pressure due to stretch. Used tires may lose as much as 5% pressure due to sidewall diffusion. After a twelve-hour period reservice tire to operating pressure.

e. Tire loading is an important factor to consider when checking tire air pressure. When a tire is loaded, the internal volume decreases which causes tire pressure to increase. The pressure increase is approximately 4% when the tire is loaded. When a tire pressure is specified and is not defined as loaded or unloaded then it shall be considered as unloaded. The nose wheel tire is not considered loaded unless the pilot and copilot are actually sitting in the cockpit.

f. The dual main gear tire pressures must be maintained as closely as possible to each other. Failure to maintain dual tire pressure as equal as possible may cause an overload of one tire beyond its rated capacity.

g. Tires are to be serviced using dry compressed air or nitrogen.

h. When checking pressure or inflating tires in extremely cold climates the aircraft should be brought into the hangar and time allowed for tires and valve stems to warm up. This will keep the valve stem from freezing up and eliminate possible leaks thru the valve core. In this condition, tire pressure should be increased to compensate for the temperature-pressure drop which will occur once the aircraft is moved back outside.

i. After inflating or checking tire pressure the valve core should always be checked for leaks before reinstalling valve cap.

j. Contaminants such as oil, hydraulic fluid, grease, tar and degreasing agents have a deteriorating effect on tires. Contaminants should be wiped from the tire using a gasoline dampened rag and washing with soap and water.

k. The tires can eventually be affected by sunlight and extreme weather conditions. The weather checking which will eventually result does not impair performance unless plies are exposed.

l. If an aircraft should experience a rejected takeoff and above normal braking energies are expended, the main wheel tires should be removed and scrapped. A visual inspection of these tires may not show any apparent damage, however, incipient damage may have occurred which could cause premature failure.

m. Inflate tires as listed below:

1. Nose Wheel tire -
   Standard Tire - 65 (±5) psi (62 to 73 psi loaded).
   Chined Tire - 105 (±5) psi (104 to 115 psi loaded).

   Note

   The nose wheel tire is to be considered loaded only when the pilot and copilot are seated in the cockpit.

2. Main Wheel Tires -
   8-Ply Tire - 105 (±5) psi (104 to 115 psi loaded).
   10-Ply Tire - 115 (±5) psi (114 to 125 psi loaded).

November 17, 1975

Learjet Temporary Service Manual Revision

SERVICE MANUAL AFFECTED: Gates Learjet Models 23, 24, 24B, 24D/E/F, 25 and 25B/C/D/F.

FILING INSTRUCTIONS: File this Temporary Revision adjacent to the page as listed below and retain until further notice.

Model 23	- File adjacent to page 1-18A.
Model 24	- File adjacent to page 1-20.
Model 24B	- File adjacent to page 1-20.
Model 24D/E/F	- File adjacent to page 1-27.
Model 25	- File adjacent to page 1-21.
Model 25B/C/D/F	- File adjacent to page 1-26.

REASON: To revise battery cell reading values.

INSTRUCTIONS: Revise step p. under "BATTERY DISCHARGE-RECHARGE RECONDITIONING CYCLE", to read as follows:

p. During the final five minutes of charge, read individual cell voltages and mark any cell which is less than 1.55 volts or peaks above 1.55 volts then decreases below 1.50 volts or is in excess of 1.75 volts. Remove those cells from service and replace.

November 5, 1976

g. Wash battery case with tap water and dry with compressed air.
h. Wash intercell hardware with tap water and wipe dry. Remove any corrosive preventive with a solvent such as trichlorethylene or acetone.
i. Inspect rubber case liners for deterioration or edges pulled away from the case. Liners may be recemented using a good metal-to-rubber cement. (EC1300 manufactured by 3M Co. or equivalent.) Liners may be replaced using neoprene rubber of a 40-60 durometer which is the same thickness of the old liners.
j. Replace cells in case, making certain to insert with the polarity symbols in the right direction. Cells are connected plus to minus.

Note

To aid in installation of battery cells, install cells inward from the end of each row until the center cell in each row remains. Apply a light coating of petroleum jelly on the sides of the last cells and adjacent cells and slide in last cells. Silicone reacts with electrolyte and is not recommended.

CAUTION

Do not use "homemade" hardware. Vendor-supplied parts are specifically designed to produce adequate electrical connections.

k. Install intercell connectors and tighten attaching hardward finger tight. Apply a thin coat of Shell Darina No. 2 or equivalent on all exposed hardware including contact surfaces and screw threads.
l. Torque intercell connecting hardware to 34 to 38 inch-pounds.
m. Charge battery.

BATTERY DISCHARGE-RECHARGE RECONDITIONING CYCLE. To prolong the service life of the aircraft battery, the battery must be submitted to a discharge-recharge reconditioning cycle in accordance with current inspection requirements, Section VIII. This procedure must also be performed any time the battery overheat warning light comes on. The following procedure is a guideline for the reconditioning cycle. It is recommended that the manufacturer's instructions be used in order to avoid confusion of the different types and brands of batteries. The following publications are available for additional information:

- Marathon Battery Instruction Manual, Publication No. BA-89; Marathon Battery Company, 8301 Imperial Drive, P.O. Box 8233, Waco, Texas, 76710.

- Gulton Battery Instruction Manual, Publication No. ABD1100; Battery Division, Gulton Industries, Inc., Metuchen, New Jersey, 08840.

a. Remove batteries from aircraft in accordance with Section VII.
b. Remove cover from battery.
c. Visually inspect battery for any evidence of corrosion or physical damage.

CAUTION

Under no circumstances should a wire brush be used for cleaning. When cleaning batteries, use extreme care to prevent this material from coming in contact with the eyes. Protective clothing such as rubber gloves, an apron and face shield should be worn.

d. Assure that all vent plugs are tight. Tip battery to side opposite receptacle and clean using a soft bristle brush and tap water. Dry off excess water with an air hose.
e. Charge the batteries at a rate of 5 amperes for seven hours.

Note

- Electrolyte level should be checked after battery has cooled.
- Make electrolyte adjustment with pure distilled water only.

f. Check and, if necessary, adjust electrolyte level to a depth of 1/8" to 1/4" on Marathon batteries and 1/2" to 3/8" on Gulton batteries.
g. Discharge batteries at a rate of 10 amperes for two hours. Discharge down to 19 volts (1.0 volt per cell average).
h. Monitor total battery voltage during discharge and record the time from start of discharge until total battery voltage drops to 19 volts.
i. If the discharge time down to total battery voltage of 19 volts was greater than 90 minutes, the battery is ready for a complete four hour charge cycle, proceed to step o. (If this is in accordance with current inspection requirements, steps k thru r must be performed.)
j. If the discharge time down to total battery voltage of 19 volts was less than 90 minutes, it must be further discharged as follows:
k. Continue discharge, as outlined in step g, while monitoring individual cell voltage.
l. As each individual cell drops to 0.6 volt, place a metal shorting strap across the cell terminals until all cells are shorted.
m. If any cell fails to drop to 0.6 volt, place a 1.0 ohm resistor of 1 or 2 watts across the terminals.
n. Let battery stand for three or more hours or until it has cooled to room temperature. After battery has cooled, remove shorting straps.
o. Charge the batteries at a rate of 5 amperes for seven hours.
p. During the final five minutes of charge, read individual cell voltages and mark any cell which is less than 1.55 volts or in excess of 1.80 volts. Remove these cells from service and replace.
q. Replace cover on battery.

Learjet Temporary Service Manual Revision

MANUALS AFFECTED: Gates Learjet Model 23, 24, 24B, 24D/E/F, and 25 Service Manuals.

FILING INSTRUCTIONS: Insert as listed below and retain until further notice.

Model 23	- Insert adjacent to page 1-20.
Model 24	- Insert adjacent to page 1-20A.
Model 24B	- Insert adjacent to page 1-20A.
Model 24D/E/F	- Insert adjacent to page 1-29.
Model 25	- Insert adjacent to page 1-22A.

REASON: To add warning to servicing procedures.

INSTRUCTIONS: Add the following WARNING under REFRIGERATION SYSTEM SERVICING.

WARNING

Do Not operate refrigeration system with condenser air outlet blocked.

Learjet Temporary Service Manual Revision

SERVICE MANUAL AFFECTED: Gates Learjet Models 23, 24, 24B, 25 and 24D/E/F Service Manuals.

NOTE: This Temporary Revision supersedes Temporary Revision dated February 17, 1977 (same subject) which should be destroyed.

FILING INSTRUCTIONS: Insert as listed below and retain until further notice.

Model 23	- Insert adjacent to page 1-23.
Model 24	- Insert adjacent to page 1-23.
Model 24B	- Insert adjacent to page 1-24A.
Model 25	- Insert adjacent to page 1-25.
Model 24D/E/F	- Insert adjacent to page 1-31.

INSTRUCTIONS: Revise text as follows:

EMERGENCY AIR BOTTLE SERVICING. (See figure 1-15C, Model 24B; figure 1-17A, Model 25; figure 1-22, Model 24D/E/F.)

The emergency air bottle furnishes emergency pressure to extend the landing gear and for emergency braking in case of hydraulic or electrical failure. The bottle is located in the nose section and is accessible through the nose compartment access doors. The bottle is to be serviced with dry air or nitrogen to between 1800 and 3000 psi. Bottle pressure is indicated by a pressure gage on the instrument panel. Assure that dry air or nitrogen is used to service the emergency air bottle. Moisture in the system can cause failure during exposure to extremely low temperatures. In accordance with current inspection intervals, Section VIII, the bottle must be inspected and tested to ensure serviceability.

Assure that the bottle is discharged prior to removal of bottle or its components. Visual inspection of the bottle requires removal of the main fitting for interior inspection. When reinstalling the main fitting use a new O-ring (Kidde P/N 213859 or Tavco P/N MS28778-12). Lubricate O-ring with Dow Corning DC 55. Torque the main fitting to 50 ft. lbs.

Charging Emergency Air Bottle

a. Remove right nose compartment access door.
b. Remove cap from emergency air bottle air valve.
c. Attach high pressure adapter to air valve and loosen valve end nut.
d. Monitor emergency air gage on instrument panel and pressurize the emergency air bottle to 1800 to 3000 psi.
e. Tighten air valve end nut and remove high pressure adapter.
f. Install air valve cap and replace nose compartment access door.

Learjet Temporary Service Manual Revision

Visual Inspection of Emergency Air Bottle

Inspect interior surface paying close attention to surface condition and in particular, any evidence of corrosion. Any visible cracking or flaking of the coating or evidence of corrosion is cause for removing container from service. Isolated cracks or corrosion appearing as a fine line may be an indication of stress weakening of the base metal. Any containers showing evidence of stress weakening should be returned to the manufacturer for reinspection. Any corrosion causing a decrease in wall thickness of .005 inch from original wall thickness is considered severe corrosion and cause for removal of container from service.

Note

Removal of paint is desirable for exterior visual inspection.

a. Inspect exterior for bulging, dents, corrosion, mechanical defects and general condition.

b. Any bulging of the container is cause for rejection.

c. Severe dents are cause for rejection.

d. Any corrosion causing a decrease in wall thickness of .005 inch from original wall thickness is considered severe corrosion and cause for removal of container from service.

e. Mechanical defects include scratches, cuts, digs and gouges and are cause for rejection if they are not superficial in nature. Containers must be rejected if the wall thickness has been reduced by mechanical defects by more than 5% of wall thickness.

Hydrostatic Test of Emergency Air Bottle

a. Hydrostatic testing is accomplished by subjecting the emergency air bottle to five-thirds times the service pressure. The test shall be performed in a water jacket and the total and permanent volumetric expansions recorded. The permanent expansion must not exceed 10% of the total expansion.

b. Perform a radiographic inspection of the container following hydrostatic test. If cracks are found the container shall be removed from service and destroyed.

c. Magnetic particle inspection may also be performed if desired.

WARNING

Do Not steel stamp the pressure vessel itself. Only the fitting boss should be stamped. Assure that fitting boss is not stamped in the radius where it is connected to the bottle.

d. After emergency air bottle has passed inspection and test it must be permanently marked (stamped into metal) with the month and year. This marking must be on the fitting boss and not the actual container.

c. Set flap control to flap extend position.
d. Attach high pressure adapter to shrader valve at air pressure side of accumulator and apply pressure.
e. Loosen nut on shrader valve.
f. Pressurize accumulator to pressure specified on accumulator decal.
g. Tighten shrader nut and remove high pressure adapter.
h. Set flap control to retract position.
i. Reinstall tailcone access door.

SERVICING HYDRAULIC RESERVOIR. The hydraulic reservoir is accessible through the tailcone access door. The reservoir incorporates a sight glass for checking fluid level. Reservoir level is low if fluid line is visible through the sight glass. Service the hydraulic reservoir with hydraulic fluid MIL-H-5606.

CAUTION

Prior to servicing the hydraulic reservoir, assure hydraulic accumulator charge is approximately 850 psi, landing gear is extended, flaps and spoilers are retracted, and brakes are released.

CAUTION

Hydraulic reservoir pressure of 10 psi should be relieved prior to removal of reservoir cap. Neglecting to do so will result in spewing hydraulic fluid over tailcone area. Refer to figure 3-2 in performing the following steps.

Servicing Hydraulic Reservoir by Hand.
a. Remove tailcone access door.
b. Loosen one of the hydraulic line nuts between hydraulic reservoir (1) and 10 psi vent valve (19) to bleed off reservoir pressure.
c. After bleeding reservoir pressure, secure hydraulic line nut and remove filler cap (22).
d. Fill reservoir to proper level and replace filler cap.
e. Reinstall tailcone access door.

Servicing Hydraulic Reservoir by Pump Method.
a. Bleed hydraulic pressure from lines by pumping brakes.
b. Remove tailcone access door.
c. Connect pump hose quick-disconnect to hydraulic reservoir return line quick-disconnect.
d. Loosen one of the hydraulic line nuts between hydraulic reservoir (1) and 10 psi vent valve (19) to bleed off reservoir pressure.
e. Pump fluid into reservoir to proper level and secure hydraulic line nut loosened in step d.
f. Remove pump quick-disconnect from aircraft reservoir return line quick-disconnect.
g. Reinstall tailcone access door.

Servicing Hydraulic Reservoir Using Hydraulic Power Unit.

Note

The following procedure may be utilized if the hydraulic power unit is equipped with a hydraulic reservoir unit.

a. Bleed hydraulic pressure from lines by pumping brakes.
b. Remove tailcone access door.
c. Connect hydraulic power unit quick-disconnects to hydraulic ground quick-disconnects.
d. Loosen one of the hydraulic line nuts between hydraulic reservoir (1) and 10 psi vent valve (19) to bleed off reservoir pressure.
e. With power on hydraulic power unit, momentarily cut in the hydraulic power unit reservoir while observing the fluid level of aircraft reservoir.
f. After proper fluid level is attained, secure hydraulic line nut loosened in step d and remove power from unit.
g. Bleed hydraulic pressure from lines by pumping brakes.
h. Disconnect hydraulic power unit quick-disconnects.
i. Reinstall tailcone access door.

SERVICING EMERGENCY AIR BOTTLE. The emergency air bottle, located in the nose section, furnishes emergency pressure to extend the landing gear and emergency braking in case of hydraulic or electrical failure. The bottle should be serviced with dry air or nitrogen to 1800 to 3000 psi. A pressure gage is located on the instrument panel.

CAUTION

Assure that dry air or nitrogen is used to service the emergency air bottle. Moisture in the system can cause system failure during exposure to extremely low temperatures.

SERVICING OXYGEN SYSTEM - BIRD SHUTOFF AND REGULATOR ASSEMBLY. The system is serviced through a filler valve on the regulator assembly. To service the bottle, use only dry breathing oxygen, Federal Specification MIL-O-27210, Type I, from a green-colored cylinder. Filling instructions are as follows:

WARNING

- The oxygen cylinder assembly manual shutoff valve must be on at all times except when servicing.
- Standard maintenance practices utilized for any aviation oxygen system should be followed. Precautions against oil, grease, and organic matter should be observed.

a. Shut off aircraft oxygen cylinder manual shutoff valve assembly.
b. Attach charging cylinder to filler valve.
c. Open aircraft oxygen cylinder manual shutoff valve assembly.

WARNING

Rapid charging of oxygen system will create a dangerous overheat condition in the cylinder.

Note

If oxygen cylinder has thermally discharged, the burst disc cap must be replaced and a new discharge indicator installed. (Refer to BURST DISC RELIEF VALVE REPLACEMENT, Section IV.)

d. Slowly charge the oxygen cylinder to the pressure specified in figure 1-10A.
e. Shut off aircraft oxygen cylinder manual shutoff valve assembly.
f. Remove charging cylinder.

CAUTION

After servicing system, use care when torquing oxygen bottle filler cap to prevent stripping of lower fitting. Use one wrench on the filler cap and one wrench on fitting below cap when loosening or tightening. Do not allow lower fitting to turn.

g. Reinstall filler cap on filler valve and tighten.
h. Open aircraft oxygen cylinder manual shutoff valve assembly.

EXTERIOR CLEANING AND CARE.

a. General
1. The aircraft should be washed frequently in order to maintain its appearance and minimize corrosion. The painted area of the aircraft should be polished at periodic intervals to remove chalking paint and restore its gloss.
2. Lubricate aircraft components wherever necessary after washing.

b. Equipment and Materials
1. The following cleaners may be used on metal or painted surfaces:
(a) Wyandotte Aerowash A.
(b) Greater Mountain Chemical 528-B.
(c) Turco Air-Tee No. 2.
(d) Cee Bee Alumaloy P.
2. The following cleaner may be used for carbon removal, exhaust stain removal, and general heavy duty cleaning:
(a) Navee 427 - The Pentone Co, 74 Hudson Ave, Tenafly, New Jersey.
(b) Naphtha - Types 1 and 2, PS661 (Stoddard Solvent) or TT-N-94 for diluting Navee 427.
3. When it is desired to polish the aircraft exterior finish, the type of finish must first be determined. The aircraft is either painted with Corlar enamel or Alumigrip polyurethane enamel. Corlar enamel can be polished with either K-2 Wadpol High Speed Aircraft Polish or Dupont "7" Car Polish. Alumigrip polyurethane enamel can be polished with any good quality automotive wax. It is recommended that Alumigrip polyurethane enamel not be waxed for the first one or two years after being applied. Instead, washing with mild detergent and water

AMBIENT TEMP °F	FILLING PRESSURE PSIG	AMBIENT TEMP °F	FILLING PRESSURE PSIG
0	1600	70	1925
10	1650	80	1950
20	1675	90	2000
30	1725	100	2050
40	1775	110	2100
50	1825	120	2150
60	1875	130	2200

NOTE: This table is provided to assure proper oxygen cylinder charge is obtained due to psig versus temperature variation.

EXAMPLE: Ambient temperature is 70° F. Charge cylinder to 1925 psig.

Figure 1-10A. Oxygen Cylinder Filling Pressure Table

will generally return luster to the polyurethane finish. The use of abrasive polish on Alumigrip polyurethane enamel will scratch and dull the finish.

4. The following cleaners may be used on acrylic plastic:

(a) Mild soaps and detergents.

(b) No. 901-D Plastic Cleaner (Acorn Adhes Co).

(c) Wilco Anti-Static Cleaner (Wilco Co).

c. Preparation for Cleaning

1. For general exterior cleaning, dilute one part of the following cleaners with the indicated quantities of water by volume:

Cleaner	Moderate Soils	Heavy Soils
Wyandotte Aero-wash A	3 to 7	3
Greater Mountain Chemical 528-B	3 to 7	3
Turco Air-Tee No. 2	3 to 7	3
Cee Bee Alumaloy P	3 to 7	3

CAUTION

The undiluted concentrate should not be allowed to contact plastic windows and/or covers. Plastic is crazed by the undiluted concentrate.

2. For removing exhaust stains and for other heavy duty applications listed below, dilute Navee 427 with the indicated quantities of water or naphtha by volume:

Soils	Dilute One Part by Volume Navee 427 to the Following Parts Water or Naphtha
Carbon Stains	Full strength
Ordinary Exhaust Stains	3 to 4 parts naphtha or 1 to 5 parts water
Grease and Oil	3 to 7 parts naphtha
Flaps Wells and Wheel Wells	5 parts water
General Heavy Duty Cleaning	5 to 10 parts water

EXTERIOR PAINT REPAIR.

a. General. These instructions cover the preparation and repair of exterior painted surfaces of the airplane. Repair painted surfaces with the same type of paint, thinners, and solvents suitable for the paint that was previously applied. Apply paint with a spray gun to achieve a smooth, even coat. The manufacturer's name and paint number are usually entered in the airplane logbook. If it is not, contact the Lear Jet factory.

1. Repair of CORLAR enamel surfaces:

(a) Sand the surface and feather edges with 320 grit or finer sandpaper.

(b) Wash area with DuPont enamel thinner, No. 3864, and wipe dry with cheesecloth.

(c) If bare metal is exposed, prime bare metal with DuPont 818-012 wash primer and allow to dry for 30 minutes.

(d) Spray DuPont 823-5001 white as prescribed by manufacturer. (Refer to paint number in logbook.)

(e) Add 50% more T-3871 DuPont thinner than was previously added to the paint and blend in the edges of the newly painted surfaces.

(f) Allow paint to dry for 24 hours.

(g) Rub the newly painted surface with Ditzler DRX-55 or equivalent rubbing compound.

2. Repair of ALUMIGRIP polyurethane enamel surfaces:

(a) Sand the surface and feather edges with 320 grit or finer sandpaper.

(b) Wash the surface to be painted with ketone (MEK) TT-M-261 and wipe dry with cheesecloth.

(c) If bare metal is exposed, prime bare metal with U.S. Paint Co. C-22-Y-7245 Alumigrip wash primer and allow to dry for 30 minutes.

(d) Apply U.S. Paint Co. Alumigrip AA-92-W-37 white primer as prescribed by manufacturer and allow to dry (drying time is approximately 8 hours at room temperature).

(e) Sand with 400 grit sandpaper.

(f) Rub edges of the primed surface with Ditzler DRX-55 or equivalent rubbing compound.

(g) Wash area with ketone (MEK) TT-M-261 and wipe dry with cheesecloth.

(h) Spray U.S. Paint Co. 6160 Alumigrip white topcoat as prescribed by manufacturer. (Refer to paint number in logbook.)

(i) Add a mixture equal to 25% of the paint with 70% cellosolve acetate and 30% butyl cellosolve and blend in the edges of the newly painted surface.

(j) Allow paint to dry for 24 hours.

(k) Rub the newly painted surface with Ditzler DRX-55 or equivalent rubbing compound.

EROSION PROTECTIVE COATING - TIP TANK AND DEFOG NOZZLE. These instructions cover the preparation and application of the Gaco N-79 coating system that is used to coat the leading edge of the tip tank and defog nozzles to prevent erosion of paint. The Gaco coating system is manufactured by Gates Engineering Company, Wilmington, Delaware 19899. Kits are available through Gates Learjet Spares Department.

a. Materials required:

1. Masking tape.
2. Sandpaper - 180 grit.
3. Toluene.
4. Stiff bristle brush.
5. Clean rags.
6. Coating Kit No. N-79 consisting of:
   (a) N-15 Primer
   (b) N-700-9 Top Coat
   (c) N-300-9 Catalyst
   (d) N-450-9 Thinner
   (e) N-81 Anti-Static Top Coat

b. Surface preparation:

1. Mask along the edge of the old coating being replaced.

2. Remove the old coating using toluene soaked rags and a stiff bristle brush.
3. After old coating is removed sand surface with 180 grit sandpaper and wash area with toluene and wipe dry.

c. Coating application:
1. Stir N-15 primer thoroughly and spray sufficient coats of primer to surface to give a dry film thickness of .001 to .002 inch. Allow a minimum of 5 minutes drying time between each primer coat. Allow a minimum of 2 hours drying time before applying the N-700-9 top coat.
2. Using the coating kit thoroughly stir N-300-9 catalyst. Mix N-300-9 catalyst with N-700-9 topcoat at a ratio of two fluid ounces of N-300-9 to one quart of N-700-9.

Note

Once the top coat and accelerator have been mixed it shall be used within 8 hours and shall not be gelled.

3. For spray application, thin top coat mixture (step 2) with 2 parts N-450-9 thinner by volume to 1 part by volume of the topcoat mixture.
4. For brush application, thin top coat mixture (step 2) with 1 part N-450-9 thinner by volume to 4 parts by volume of the topcoat mixture.
5. Apply top coat in multiple coats by either spraying or brushing. Allow each coat to dry from 10 minutes to 1 hour prior to application of the next coat. Coating thickness shall be .007 to .010 inch when cured.

Note

Air bubbles may be removed by spraying with a fine mist of N-450-9 after each application.

Normally 4 brush coats or 8 spray coats will give the specified cured thickness for the topcoat.

6. After top coat has been applied the N-81 anti-static top coat must be applied within a minimum of 10 minutes and a maximum of 30 minutes.
7. When N-81 anti-static topcoat is being applied with a brush, no thinning is required. If N-81 anti-static topcoat is to be sprayed on, the anti-static topcoat can be thinned with a maximum of 2 parts by volume of N-450-9 thinner to 1 part by volume of N-81 anti-static topcoat.
8. Apply anti-static topcoat in multiple coats by either spraying or brushing. Allow enough time between coats for the shiny wet appearance to disappear (approximately 10 minutes). Apply coats to a total thickness of .001 to .002 inch.

Note

Normally 2 or 3 coats will give the specified thickness for the anti-static topcoat.

9. Full cure of the erosion coating will be attained in 4 days under normal temperature.

3. Close all openings.
4. Cover the tires and avoid allowing tires to stand in pools of cleaning solution any longer than required for the washing operation.
5. Cover lubricated parts.
6. Cover static ports and pitot tubes.
7. Mask off antennas with polyethylene sheeting or aluminum foil tape.

d. Cleaning Aircraft Exterior

CAUTION

Avoid excessive spray on electrical conduits, electrical units, or readily absorbent materials.

1. Method of application.
   (a) Use non-atomizing spray equipment.
   (b) Use soft bristle fiber brushes.
      (1) Presoften brushes by soaking in the cleaning solution.
2. Application of cleaner.
   (a) Apply the cleaner, using one of the above mentioned methods.

Note

Do not apply the cleaner to excessively large areas which cannot be adequately brushed and thoroughly rinsed before the cleaner dries on the surface.

(b) Allow cleaner to soak for 5 to 10 minutes.

Note

Do not allow cleaner to dry on the surface before rinsing as staining can result.

(c) Reapply the solution with a brush and scrub where necessary.
(d) Pressure wash all surfaces contacted by the cleaner thoroughly with fresh water, preferably warm (120° to 140° F).
3. Clean stained areas (exhaust, carbon, etc.).
   (a) Apply cleaner with a mop or non-atomizing spray.
   (b) Allow cleaner to soak for 5 to 20 minutes.
   (c) Flush thoroughly with a pressure water rinse.
4. Clean acrylic windows.
   (a) Remove loosely adhering dirt and grit from the window by flushing with water filtered free from dirt and abrasive materials.
   (b) Wash with non-abrasive soap and water. A soft thoroughly clean cloth, sponge, or chamois may be used in washing, but only as a means of carrying the soapy water to the plastic. Go over the surface only with the bare hand so that abrasive can be quickly detected and removed before it scratches the plastic surface.

Note

All rubbing operations on acrylic plastics shall be done with as light a pressure as possible.

(c) Dry the window with a clean damp chamois. A clean soft cloth or tissue may be used if care is taken not to rub the plastic after it is dry.

CAUTION

Rubbing the plastic surface with a dry cloth will cause scratches and build up an electrostatic charge which attracts dust particles.

(d) Remove oil and grease by rubbing lightly with a cloth wetted with aliphatic naphtha.

CAUTION

Do not use the following materials on acrylic plastics: gasoline, alcohol, benzene, hexane, xylene, acetone, carbon tetrachloride, fire extinguisher or deicing fluids, lacquer thinners, or window cleaning sprays as they soften the plastic and/or cause crazing.

4. Clean radome.
   (a) Remove insect residue from radome with a mild detergent diluted with water.

Note

Ensure complete removal of detergent after cleaning to prevent staining and possible paint removal.

INTERIOR CLEANING AND CARE.

a. Materials required
   1. Rug Cleaner, Wich Torlan (manufactured by Wichita Brush & Chemical Co), Orvus WA Paste or Lissapol, P/N 1132 (manufactured by Imperial Chemical Industries), or equivalent.
   2. Cheesecloth.
   3. Bon Ami.
   4. Cleaner for acrylic plastics
      (a) Mild soaps and detergents
      (b) Aliphatic naphtha
      (c) Meguiare "Mirror Glaze" plastic cleaner.
   5. APCO No. 10 Mineral Spirits, or equivalent.

CAUTION

Do not use abrasive cleaners, particularly those containing bleaches on any interior

decorative surface. These abrasive cleaners will destroy silk screened designs. They will also damage colored leathers, painted surfaces and plastic surfaces. Avoid using organic chemicals, particularly ketones, esters, ethers, aromatic amines, nitro compounds and hydrocarbons or cleaners which may contain the above chemicals. Avoid using materials such as fire extinguisher fluids, de-icing fluids, paint strippers, lacquer thinners, or hydraulic fluids.

6. Clean rugs, leather, fabrics
   (a) Mix 2 ounces of Orvus paste per gallon of water.
   (b) Use only the foam for cleaning.
   (c) Sponge foam on the surface. Do not get surface too wet.
7. Clean plastics or metal surfaces

CAUTION

Do not use the following materials on decorative plastics: gasoline, alcohol, benzene, hexane, kerosene, xylene, acetone, carbon tetrachloride, fire extinguisher or de-icing fluids, lacquer thinners, or window cleaning sprays.

   (a) Mix 1 tablespoon Orvus paste per gallon of water.
   (b) Wash the surfaces with a cloth.
   (c) Rinse the surface with clean water and wipe dry.
8. Clean acrylic windows
   (a) Refer to EXTERIOR CLEANING AND CARE for acrylic window cleaning procedures.
9. Clean lower tailcone area
   (a) Remove foreign material from structure beneath batteries and surrounding area with APCO No. 10 Mineral Spirits or equivalent.

CAUTION

Remove batteries from airplane when washing down this area. Trichlorethylene or any degreasing solvent will react with polystyrene battery cell cases and cause permanent damage.

AIRCRAFT ELECTRICAL BONDING REQUIREMENTS. Bonding jumpers and electrical grounds are installed throughout the aircraft systems and components to assure adequate structural bonding. When installing previously removed bonding jumpers, assure that all jumpers are attached at their proper locations and an adequate structural bond is effected.

TORQUE REQUIREMENTS - THREADED FASTENERS. (See figure 1-11.) Torquing is not required for bolts, nuts, and screws installed in control systems or other installations where torque would interfere with proper operation of parts. On such applications, the assembly shall be firm, but not tight enough to cause binding.

Note

When applying torque to bolt heads, increase the maximum torque value by an amount equal to the shank friction. Measure the shank friction with a torque wrench.

Steel Nuts, Bolts and Screws, Inch-Pounds		
Size of Bolt, Nut or Screw	Torque Limits Tension Type Nuts MS20365 and AN310	Torque Limits Shear Type Nuts MS20364 and AN320
8-32	12-15	7-9
10-32	20-25	12-15
1/4-28	50-70	30-40
5/16-24	100-140	60-85
3/8-24	160-190	95-110
7/16-20	450-500	270-300
1/2-20	480-690	290-410
9/16-18	800-1000	480-600
5/8-16	1100-1300	660-780
3/4-16	2300-2500	1300-1500
7/8-14	2500-3000	1500-1800
1-14	3700-5500	2200-3300

Figure 1-11. Torque Requirements - Threaded Fasteners

Learjet Temporary Service Manual Revision

SERVICE MANUALS AFFECTED: Gates Learjet Models 23, 24, 24B, 24D/E/F, 25 and 25B/C/D/F including United Kingdom 25B/C/D/F.

FILING INSTRUCTIONS: Insert this Temporary Revision as shown below and retain until further notice.

Model 23	- Insert adjacent to page 1-26.
Model 24	- Insert adjacent to page 1-36.
Model 24B	- Insert adjacent to page 1-30.
Model 24D/E/F	- Insert adjacent to page 1-38.
Model 25	- Insert adjacent to page 1-31.
Model 25B/C/D/F	- Insert adjacent to page 1-37.

INSTRUCTIONS: Add or revise, as applicable, flared tubing maintenance practices to appear as shown on the following pages.

Learjet Temporary Service Manual Revision

FLARED TUBING - MAINTENANCE PRACTICES

1. General
   - A. Flared tubing maintenance practices include removal/installation, inspection and fabricating.
   - B. From time to time, as inspection dictates or if damage occurs, it may be required to fabricate new flared tubing assemblies. This section outlines standard acceptable methods for fabricating flared tubing assemblies.
   - C. Whenever a tube has been damaged and needs replacing, the cause of the damage must be determined and corrected.
   - D. It is recommended that flared tubing be replaced and not repaired. When replacing aircraft tubing the replacement tubing must be of the same diameter, wall thickness and material as the old tube.
   - E. As a general rule, Learjet aircraft tubes are fabricated from either 5052-0, aluminum alloy, ASI 304 stainless steel or type 321 corrosion resistant steel. These tubes are usually fabricated from the following sizes of tubing: .500 O.D. x .035 wall, .500 O.D. x .065 wall, .375 O.D. x .049 wall, .250 O.D. x .035 wall and .750 O.D. x .035 wall. Additional tubing sizes may be found on the aircraft and it is imperative that the new tubing size matches the old tubing size.
   - F. When fabricating a new tube, the old tube, if not severely damaged, may be used as a template. If the old tube is too damaged for use as a template then a template can be made using soft iron wire.
   - G. All bends in the tubing are to start at a reasonable distance from the end of the tube. This allows the nut and sleeve to be slipped back far enough on the tube to facilitate flaring.
   - H. Tubing and fittings generally consist of an AN819 sleeve inside an AN818 nut. When assembling end fittings on a tube it is very important that dissimilar metals are not used. The use of dissimilar metals will cause corrosion. Assure that the correct fittings and sleeves are used.
   - I. Aluminum alloy tubing which is .375 outside diameter or less must be double flared. All other tubing shall be single flared.
   - J. Assure that only a 37° aviation flare is used. The mistaken use of an automotive flare will give improper flare angle and shape, causing misfit, leakage, stress and probable failure.

2. Removal/Installation
   - A. Remove Flared Tubing
     - (1) When removing flared tubing from the aircraft the tubing ends and related fittings must immediately be capped. When removing several tubes from the same area at one time it is helpful if the tubing ends are tagged.

B. Install Tubing (See figure 201)

(1) Check tubing for cleanliness and missing protective caps. Any tube which is missing a protective cap must be thoroughly cleaned.

(2) Lubricate fitting threads with hydraulic fluid or apply thread tape if applicable.

(3) With tubing in proper installation position, loosely connect fittings and clamps.

(4) With clamps loose and without forcing tubing into alignment it must be possible to hand tighten nuts until tubing flare bottoms out against the fitting. If this cannot be done check alignment as follows:

(a) Tighten, and lightly torque with a wrench, the nut on one end of the tubing.

(b) Loosen the nut on the other end of the tubing and slide the nut down the tubing until the flare is clearly visible.

(c) The tubing must be parallel within 2 degrees of the fitting.

(d) The tubing must be in line with the fitting within 1/32 inch per 10 inches of tube length.

(e) The tubing must match the fitting lengthwise within 1/32 inch per 10 inches of tube length.

(f) If the tubing cannot be rebent to meet these requirements it must be replaced.

(5) Tighten nuts to their specified torque value. (See figure 202)

(6) Inspect tubing installation and assure that tubing minimum clearance is 3/32 inch of surrounding structure, adjacent tubings or fittings.

(7) Assure that tubing has proper identification markings.

3. Inspection/Check

A. Inspect Tubing Prior to Installation as follows:

(1) Replace any steel tubing which has a nick or scratch deeper than 10 percent of the tubing wall thickness.

(2) Replace any aluminum tubing which has a nick or scratch deeper than 20 percent of the tubing wall thickness.

(3) Replace any pressure or return line which has a dent deeper than 5 percent of the tubing outside diameter.

(4) Replace any pressure or return line which has a dent in the heel of the bend radius deeper than 2.5 percent of the tubing outside diameter.

(5) Replace any suction line which has a dent deeper than 10 percent of the tubing outside diameter.

(6) Replace any suction line which has a dent in the heel of the bend radius deeper than 5 percent of the tubing outside diameter.

(7) Replace any tubing which has evidence of the metal being stretched thin on the heel of the bend radius.

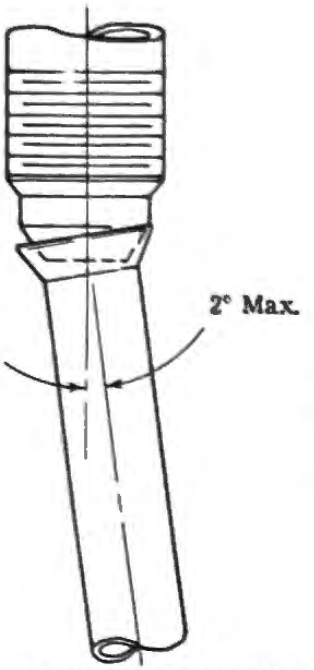

ANGULAR MISMATCH

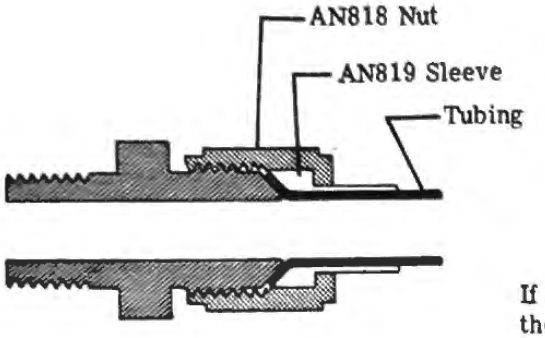

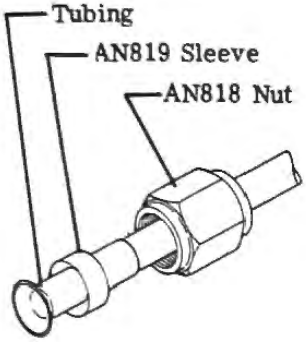

Measure mismatch with the free tube end clear of the fitting.

Maximum allowable: 1/32 inch per 10 inches of tube length.

If necessary, push near the fixed end of the tube assembly so that the free end is clear.

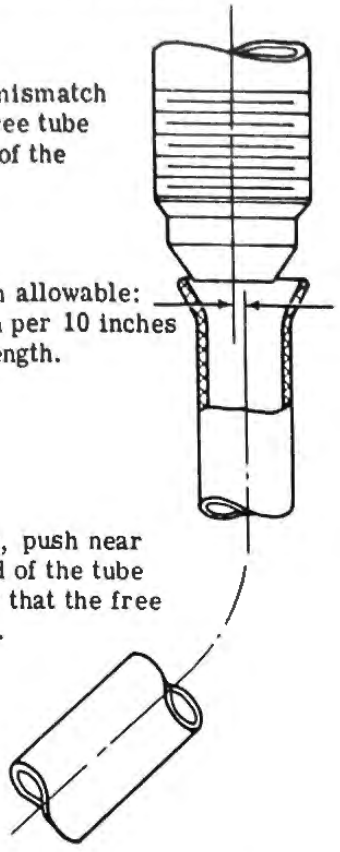

RADIAL MISMATCH

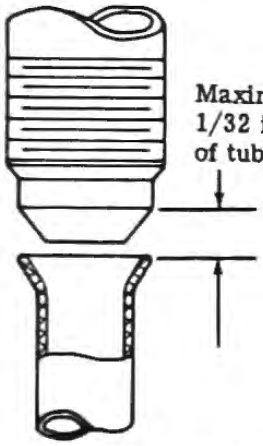

Maximum allowable: 1/32 inch per 10 inches of tube length.

If tube assembly is too short, measure the gap.

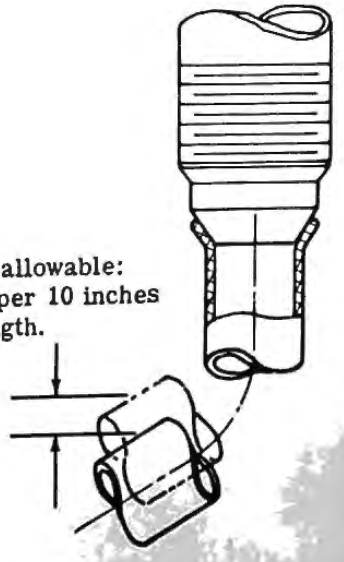

Maximum allowable: 1/32 inch per 10 inches of tube length.

LENGTHWISE MISMATCH

If tube assembly is too long, either:
1. Remove the fitting, and measure the change in position of the free end; or
2. Push near the fixed tube end, and measure the distance to just unseat and free the flare.

Flared Tubing Installation
Figure 201

(8) Polish out burrs or scratches on the inside of the tubing flare. Begin with fine emery and oil and finish with crocus cloth and oil.
(9) Inspect flare and replace as indicated in figure 205.

4. Approved Repairs

A. Bend and Flare tubing as follows:

(1) Remove old or damaged tube from the aircraft in accordance with Removal/Installation.
(2) If the old tube is too damaged to use as a template, use soft iron wire and form into a shape which will match the fittings on the aircraft.

NOTE: Always select a path for tubing which will require bends in the tubing. Bends are necessary to relieve mechanical strain, permit temperature expansion and contraction and to absorb vibration.

(3) Determine the outside diameter, wall thickness and material of the old tube.
(4) Select a new piece of tubing with the same specifications as the old tubing.
(5) Cut the new tubing approximately 10% longer than the tube being replaced. This will provide for variations in bending.

NOTE: It is important, when cutting tubing, that the ends be cut square within 30 minutes to the centerline of the tube.

(6) Deburr the tube end. Exercise care that all burrs are removed and a minimum amount of material is removed.
(7) Using one of the following methods and tube bending data in figure 204, bend the new tubing to match the template.
(a) Hand bending without tools - This method is not recommended but may be used on tubing with an outside diameter of less than 1/4 inch. Mimimum bend radius table must be used as a guide. Bend tube carefully to avoid excessive flattening, kinking, or wrinkling. Slight flattening is acceptable if the flattened portion is not less than 75% of the original outside diameter.
(b) Hand bending with hand bender - To bend tubing with a hand tube bender similar to that shown in figure 203, proceed as follows. Insert tubing into bender by raising the slide bar handle as far as it will go. Hook clip over tube and assure that the full length of the slide bar groove is in contact with the tubing. With zero marks aligned, rotate handle until desired bend is obtained.

(c) Tube bending machine - Power tube bending machines are manufactured for all types of tubing. On large diameter and hard material tubing a power tube bender is necessary. Power bending machines work on the same principle as the hand bender.

NOTE: Tubes must be formed in such a manner so that when the tube is installed it will not have to be pulled or deflected into place by tightening the fitting.

(8) Slide the nut, followed by the sleeve, onto the end of the tube and move them down the tube far enough to allow for flaring.
(9) Using the appropriate flaring tool and the specification found in figures 205 thru 208 , flare the tube ends.

5. Cleaning/Painting

A. Newly fabricated tubing assemblies must be cleaned, capped and, if required, painted. Tubing which has been stored in unclean conditions must also be cleaned prior to installation.

B. Tubing cleaning equipment must consist of a metal tank with a solvent reservoir, a pump, a filtration unit (25 micron nominal) and a rack or screen which will prevent immersion of tubing into solvent. The pump nozzle must have a pressure high enough that it will remove chips, oil and other foreign matter from the tube.

TORQUE WRENCH LIMITS (INCH-POUNDS)				
	Tubing End Fittings			
Tubing O. D. Inches	Aluminum Alloy Tubing - Flare MS33583 or MS33584		Steel Tubing - Flare MS33584	
	Minimum	Maximum	Minimum	Maximum
1/4	40	65	135	150
3/8	75	125	270	300
1/2	150	250	450	550
5/8	200	350	650	700
3/4	300	490	900	1000
1	500	700	1200	1400
1 1/4	600	900	----	----
1 1/2	600	900	----	----

Tubing Torque Limits
Figure 202

C. New tubing should be painted the same as the old tubing. Usually, aluminum tubing located in the wheel well area and in the wet portion of the wing are painted with epoxy primer. Aluminum tubing located inside of structure is usually coated with zinc chromater primer. Stainless steel tubing requires no finish.

D. The interior surface of fire extinguisher and oxygen tubes shall be kept free of all finish.

E. Clean tubing as follows:
   (1) Thoroughly flush the outside and inside of the tubing. Assure that flare, nut, and sleeve are thoroughly cleaned.
   (2) Allow excessive solvent to drain from the tube.
   (3) Using clean, dry, compressed air, blow all remaining solvent from tube exterior, interior and fittings.
   (4) Immediately cap tubing using clean hardware.
   (5) Paint tubing if required.

F. Paint tubing as follows:
   (1) With nut and sleeve both seated against the flare, mask 3/4 inch back from back face of nut.
   (2) Determine the type of finish which was on old tube. In most cases, the aluminum tubing will have been chemically cleaned and then chemical film treated followed by either zinc chromate or epoxy primer.

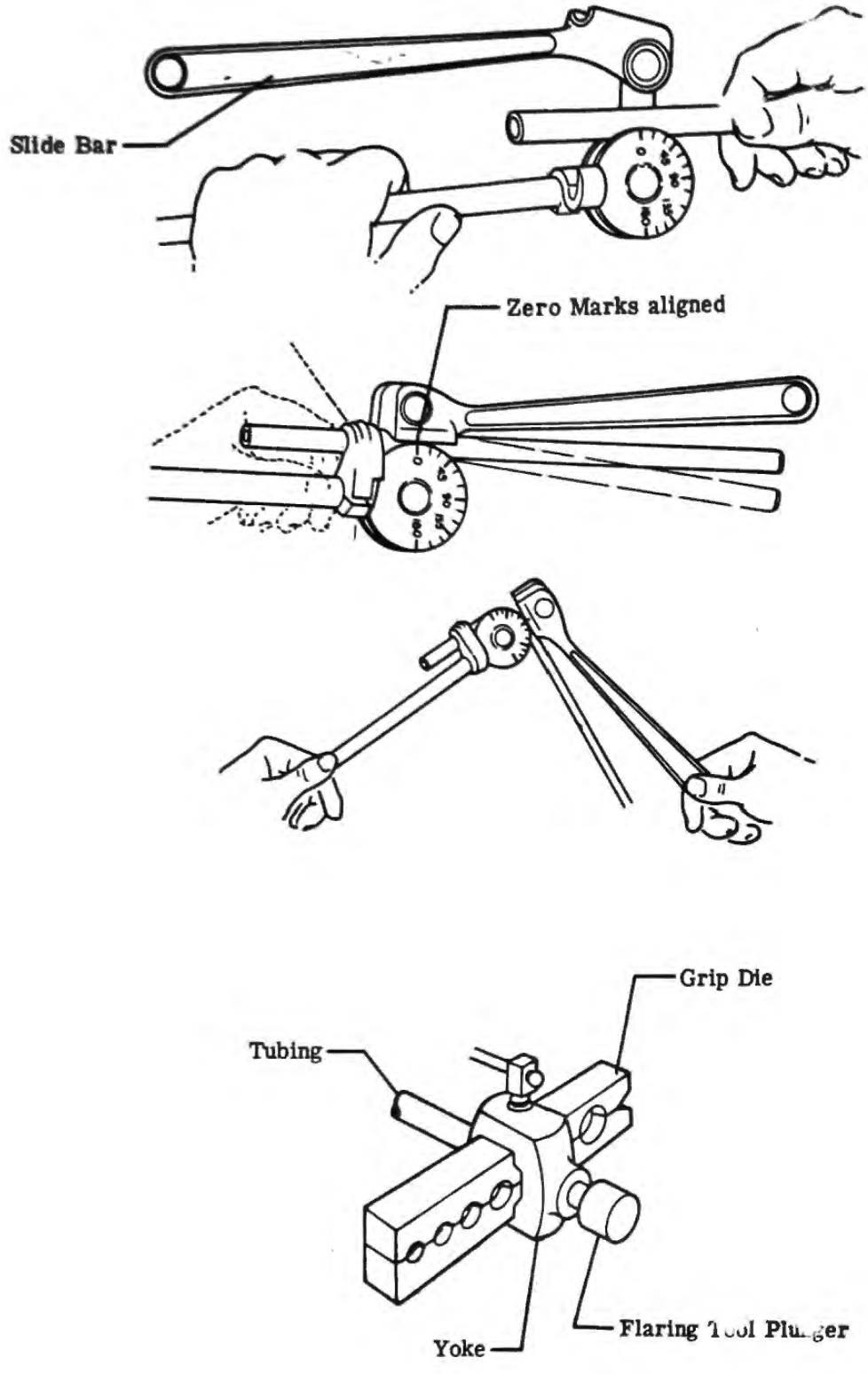

Tubing Fabrication Tools
Figure 203

TUBE OD	SPECIAL BEND RADII		RECOMMENDED BEND RADII		ADDITIONAL BEND RADII
	1-1/2 D	2 D	3D	4D	6D
1/8	.188	.250	.375	.500	.750
3/16	.281	.375	.563	.750	1.125
1/4	.375	.500	.750	1.000	1.500
5/16	.469	.625	.938	1.250	1.875
3/8	.563	.750	1.125	1.500	2.250
7/16	.656	.875	1.312	1.750	2.625
1/2	.750	1.000	1.500	2.000	3.000
5/8	.938	1.250	1.875	2.500	3.750
3/4	1.125	1.500	2.250	3.000	4.500
7/8	1.3125	1.750	2.625	3.500	5.250
1	1.500	2.000	3.000	4.000	6.000
1-1/8	1.688	2.250	3.375	4.500	6.750
1-1/4	1.875	2.500	3.750	5.000	7.500
1-3/8	2.063	2.750	4.125	5.500	8.250
1-1/2	2.250	3.000	4.500	6.000	9.000
1-5/8	2.438	3.250	4.875	6.500	9.750
1-3/4	2.625	3.500	5.250	7.000	10.500
1-7/8	2.813	3.750	5.625	7.500	11.250
2	3.000	4.000	6.000	8.000	12.000
2-1/4	3.375	4.500	6.750	9.000	13.500
2-1/2	3.750	5.000	7.500	10.000	15.000
3	4.500	6.000	9.000	12.000	18.000

Tube Bending Data
Figure 204

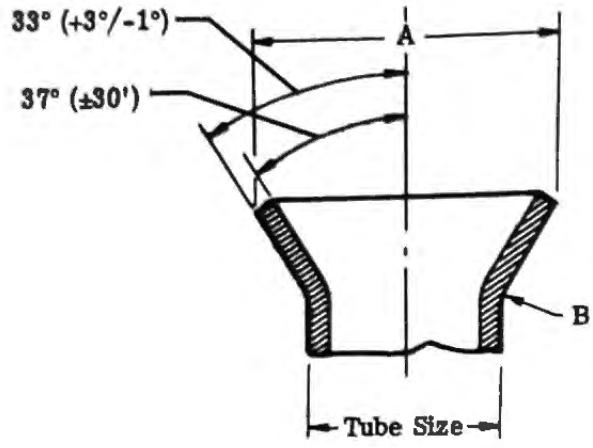

TUBE SIZE NOMINAL OD	A DIA AL ALLOY TUBING		A DIA STEEL TUBING		B ±.010 RAD
1/8	.200		.200		.032
3/16	.302		.302		
1/4	.359		.359		
5/16	.421	+.000	.421	+.000	
3/8	.484	-.010	.484	-.010	.046
1/2	.656		.656		
5/8	.781		.781		.062
3/4	.937		.937		.078
1	1.187		1.187		.093
1-1/4	1.500		1.500		
1-1/2	1.721	+.000	1.721	+.000	
1-3/4	2.106	-.015	2.106	-.015	
2	2.356		2.356		.109
2-1/2	2.856		2.856		
3	3.356		3.356		

Single Flare Specifications
Figure 205

EXTRUDED FIN

Wedge raised above surface of flare. Two marks diametrically opposite.

Caused by worn throat on clamping die.

BASIS FOR REJECTION as it prevents sleeve from seating properly.

CRACKED FLARE

Cracks usually longitudinal in flared portion.

Caused by too great an eccentric setting on rotary mandrel. Too much pressure on ram mandrel. Flaw in material.

NOT ACCEPTABLE.

ANGLED/ECCENTRIC FLARE

Flare is eccentric with tube. Tip not perpendicular to center line of tube. Thickness of flare varies.

Caused by loose clamping or mandrel or dies out of alignment. Also angle cut tube.

NOT ACCEPTABLE.

ROUGH EDGE

Lip of flare has jagged or uneven edge.

Caused by improper cutting or burring or too much mandrel pressure.

NOT ACCEPTABLE.

DIE CREASE

Slight longitudinal fin along flare or tube.

Caused by slightly larger than nominal tube.

Crease must not be more than .004" high on flare.

ACCEPTABLE IF sleeve passes freely onto flare.

SCRATCHES/GROOVES - INTERNAL ANGULAR

Marks approximately parallel to flare lip.

Caused by metal chip pickup on mandrel.

ACCEPTABLE UNLESS depth exceeds 10% of flare thickness.

Single Flare Acceptance Limits
Figure 206 (Sheet 1 of 2)

SCRATCHES/GROOVES - INTERNAL LONGITUDINAL OR SPIRAL

Marks perpendicular or spiralling to flare tip.

Caused by scored mandrel or metal chip pickup.

NOT ACCEPTABLE IF marks are on outer 30% of flare.

ACCEPTABLE IF marks are on inner 70% of flare and depth does not exceed 10% of flare thickness.

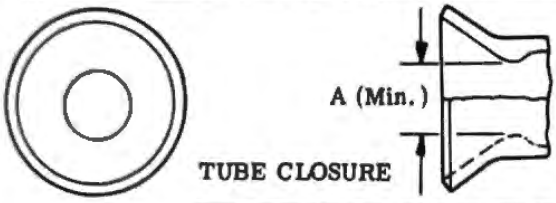

TUBE CLOSURE

Tube ID decreased by flaring.

Caused by too great an eccentric on rotary mandrel.

ACCEPTABLE IF ID is not smaller than dimension below.

TUBE SIZE	1/8	3/16	1/4	5/16	3/8	1/2	5/8	3/4	1
A MIN.	.049	.112	.150	.221	.284	.378	.471	.506	.820

CLAMPING DIE MARKS

Small irregular marks in clamping area of tube.

Caused by die clamps.

ACCEPTABLE IF depth does not exceed 5% of wall thickness.

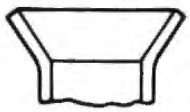

SHARP INNER EDGE

Sharp edge at junction of inner flare and tube diameter.

ACCEPTABLE.

ABRASIVE SCRATCHES

Smooth abrasive area on flare tip.

Caused by cleanup polishing.

ACCEPTABLE IF depth does not exceed 5% of wall thickness.

SCRATCHES/DINGS

Scratches or dings on tubing and/or flare surface.

Caused by storing and handling.

ACCEPTABLE IF depth does not exceed 5% of wall thickness.

Single Flare Acceptance Limits
Figure 206 (Sheet 2 of 2)

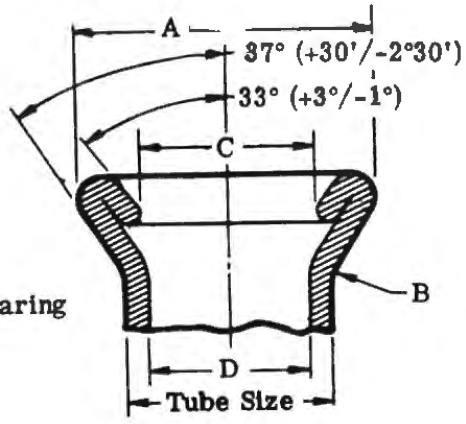

Break Corners Prior to Flaring

TUBE SIZE NOMINAL OD	A +.000 -.010 DIA	B RAD ±.010	C DIA		D DIA REF	WALL THICKNESS
			MAX	MIN		
1/8	.200	.032	.096 .086	.062 .048	.062 .048	.028 .035
3/16	.302		.168 .158	.124 .110	.124 .110	.028 .035
1/4	.359		.230 .219	.187 .173	.187 .173	.028 .035
5/16	.421		.281 .259	.235 .205	.235 .205	.035 .049
3/8	.484	.046	.354 .344 .322	.312 .298 .268	.312 .298 .268	.028 .035 .049

Double Flare Specifications
Figure 207

EXTRUDED FIN

Wedge raised above surface of flare. Two marks diametrically opposite.

Caused by worn throat on clamping die.

BASIS FOR REJECTION as it prevents sleeve from seating properly.

DIE CREASE

Slight longitudinal fin along flare or tube.

Caused by slightly larger than nominal tube.

Crease must not be more than .004" high on flare.

ACCEPTABLE IF sleeve passes freely onto flare.

SCRATCHES/GROOVES - INTERNAL ANGULAR

Marks approximately parallel to flare lip.

Caused by metal chip pickup on mandrel.

ACCEPTABLE UNLESS depth exceeds 10% of flare thickness.

SCRATCHES/GROOVES - INTERNAL LONGITUDINAL OR SPIRAL

Marks perpendicular or spiralling to flare lip.

Caused by scored mandrel or metal chip pickup.

NOT ACCEPTABLE IF marks are on outer 30% of flare.

ACCEPTABLE IF marks are on inner 70% of flare and depth does not exceed 10% of flare thickness.

CRACKED FLARE

Cracks usually longitudinal in flared portion.

Caused by too great an eccentric setting on rotary mandrel. Too much pressure on ram mandrel. Flaw in material.

NOT ACCEPTABLE.

ANGLED/ECCENTRIC FLARE

Flare is eccentric with tube. Tip not perpendicular to center line of tube. Thickness of flare varies.

Caused by loose clamping or mandrel or dies out of alignment. Also angle cut tube.

NOT ACCEPTABLE.

Double Flare Acceptance Limits
Figure 208 (Sheet 1 of 3)

CLAMPING DIE MARKS

Small irregular marks in clamping area of tube.

Caused by die clamps.

ACCEPTABLE IF depth does not exceed 5% of wall thickness.

ABRASIVE SCRATCHES

Smooth abrasive area on flare tip.

Caused by cleanup polishing.

ACCEPTABLE IF depth does not exceed 5% of wall thickness.

SCRATCHES/DINGS

Scratches or dings on tubing and/or flare surface.

Caused by storing and handling.

ACCEPTABLE IF depth does not exceed 5% of wall thickness.

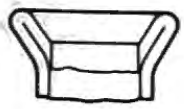

EXTRUDED FLARE

Flare extends into ID of tube.

Caused by tube being too far out of clamping die before flaring. Too much pressure. Cone mandrel without stop.

ACCEPTABLE IF flare does not extend past minimum tube ID.

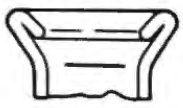

INDENTATION - INNER TUBE

Mark on tube ID below flare.

Caused by second operation pilot when mandrel is misaligned with clamping die.

NOT ACCEPTABLE.

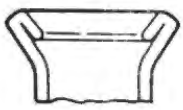

FLATTENED LIP

Flattened or ringed flare outer lip.

Caused by various machine settings.

ACCEPTABLE PROVIDING flare is perpendicular to tube center line and is not cracked at bend.

Double Flare Acceptance Limits
Figure 208 (Sheet 2 of 3)

THIN FLARE

Flare thickness unusually thin.

Caused by cone mandrel without stop.

ACCEPTABLE IF thickness "T" is not less than 1.5 times tube wall thickness.

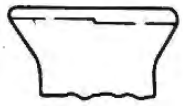

VARYING FLARE THICKNESS

Flare thickness varies.

Caused by die misalignment.

ACCEPTABLE IF variation does not exceed .004.

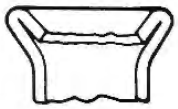

WAVY EDGE

Uneven flare inner edge.

Caused by tooling variables.

ACCEPTABLE IF flare does not extend past minimum tube ID.

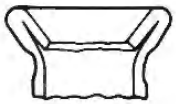

SLEEVE INDENTATION

Tube indented at outside base of flare.

Caused by worn tooling.

ACCEPTABLE IF indentation is not more than 12% of nominal thickness.

Double Flare Acceptance Limits
Figure 208 (Sheet 3 of 3)

SECTION II
AIRFRAME AND FLIGHT CONTROL SYSTEMS

TABLE OF CONTENTS

Title	Page
Wings	2-2
Wing Removal and Installation	2-2
Lightning Strike Protection	2-2D
Vortex Generators	2-2D
Control Cable Damage Limitations	2-2E
Static Rebalancing of Control Surfaces	2-2E
Control Surface Balance Check	2-4
Control Surface Balancing	2-4
Aileron Control System	2-4
Rigging	2-9
Autopilot (Roll) Capstan Slip Clutch Check and Adjustment	2-10
Replacement and Adjustment of Autopilot Roll Followup	2-11
Aileron Trim Tab System	2-13
Aileron Spoiler Tab Replacement	2-15
Wing Flap System	2-15
Rigging	2-21
Spoiler System	2-22
Rigging	2-25
Rudder Control System	2-25
Rigging	2-28
Autopilot (Yaw) Capstan Slip Clutch Check and Adjustment	2-28
Replacement and Adjustment of Autopilot Yaw Followup	2-29
Rudder Removal	2-30
Rudder Trim Tab System	2-30
Horizontal Stabilizer System	2-30A
Rigging	2-33
Elevator Control System	2-35
Rigging	2-36A
Autopilot (Pitch) Capstan Slip Clutch Check and Adjustment	2-38
Replacement and Adjustment of Autopilot Pitch Followup	2-38
Autopilot Pitch Servo Replacement	2-39
Elevator Spoiler Tab Replacement	2-39
Adjustment and Rigging of Aileron - Rudder Interconnect	2-39
Stall Warning and Control System	2-39
Fuselage	2-39
Cockpit Center Pedestal	2-43
Adjustment - Pedestal Control RPM Aural Warning Switches	2-43
Cabin Door	2-43
Baggage Compartment	2-56
Seats	2-56
Safety Belts	2-65
Map Case	2-65
Windshield	2-65
Cabin Windows	2-69
Emergency Exit Window	2-69
Toilet	2-69
Refreshment Cabinet	2-69
Work Table	2-69
Ash Trays	2-69
Fuselage Sealing	2-71
Types of Seals	2-71
Equipment and Materials	2-71
Sealing Application	2-72
Nose Cone Erosion Shoe	2-77
X Ray Inspection	2-79

WINGS. The one-unit fully cantilever constructed wing consists of the leading edge, the wing box section, ailerons, flaps, spoilers, and tip tanks. The multicellular-type wing structure is formed by eight spars and 13 ribs. A tapered top skin and a uniform bottom skin covers the wing structure. The integral wing fuel tanks are full span except for the main gear wheel well areas, the wing leading edges, and aft of spar 7. Wing sweepback at the 25% chord is 13°. Eight attach fittings mate the wings to the fuselage. Conventional-type ailerons are attached to the rear spar at three hinge points. The single slotted flaps are attached to the inboard rear spar by tracks, rollers, and hinges. The spoilers are installed in the top wing surface immediately forward of the flaps.

WING REMOVAL AND INSTALLATION. Wing removal primarily consists of defueling the aircraft, supporting the wing and fuselage, disconnecting wiring, plumbing and control cables and the removal of the keel beam and the eight wing to fuselage attaching bolts.

EQUIPMENT AND MATERIAL REQUIRED.

a. Spreader Bar P/N 14081.
b. Wing Mating Dolly P/N 2320000.
c. Wing Transfer Dolly P/N 2300001.
d. Engine Pylon Jacks and Jack Pads.
e. Nose Jack and Jack Pad.
f. Drip Pans.
g. Wing Protective Cover.
h. Drive Pins.
i. Centering Pins (fabricate pins from removed wing to fuselage attach bolts).
j. 9X Rivet Gun or equivalent and Flush Set.

a. Removal Instructions.

1. Defuel aircraft per Section I and purge fuel tanks.
2. Install jack pads and jacks under engine pylons. Position jacks to obtain maximum clearance between the trailing edge of the wing and jacks.
3. Install jack pad and jack under nose of aircraft.
4. Raise aircraft until main landing gear tires are clear of the ground.
5. Remove wing flaps from aircraft.
6. Retract spoilers.
7. Pressurize hydraulic system and unlock main landing gear down locks.
8. Relieve pressure from hydraulic system and drain reservoir.
9. Disconnect and remove batteries from aircraft.
10. Lower inboard main landing gear wheel well doors.
11. Install protective cover on top inboard side of wing and wing leading edge.
12. Remove wing fillet fairings on top of wing and access doors under wing and fuselage. Tag parts as they are removed and retain for reinstallation.
13. Drill out rivets from trailing edge of wing to fuselage fairing inboard of wing flaps (see figure 2-1). Do not remove rivets from fairing attached to wing.
14. Disconnect ADF antenna, if installed under fuselage and stow.
15. Disconnect wing to fuselage wiring at terminal blocks above each landing gear wheel well. Tag wiring as it is disconnected for reinstallation.
16. Disconnect plumbing fittings and electrical connectors as required at both ends of keel beam. Use drip pans to catch residual fuel and hydraulic fluid from plumbing. Cap fittings and connectors.
17. Disconnect and cap plumbing fittings and electrical connectors as required at both sides of keel beam.
18. Disconnect and cap hydraulic fittings on top of the wing between the two center wing attach fittings. Reposition fittings to clear wing.

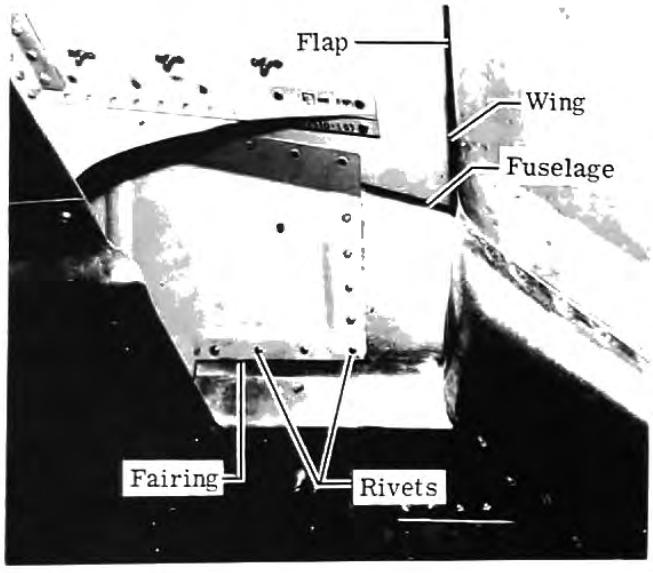

VIEW OF LEFT WING LOOKING INBOARD

Figure 2-1. Wing to Fuselage Fairing

19. Disconnect aileron cable turnbuckles at keel beam and forward of flaps. Remove pulleys or cable guard pins as required and pull cables through wing. Stow cables.

Note

Attach string to flight control cable terminals before pulling cables through structure. Pull cables clear of keel beam and secure string to structure. When reinstalling cables use these strings as a guide to prevent misrouting cables.

20. Remove seats and divan from aircraft.
21. Remove cabin floorboards.
22. Remove interior arm rests on both sides of cabin to allow access to upper wing torsion link bolts.
23. Remove liner at lower right side of baggage compartment between frame 19 and 20 and disconnect shielded connectors for flux valve.
24. Disconnect elevator control cable turnbuckles. Remove cable fairleads and pressure seals at frame 15. Pull cables through frame 15 into cabin. Stow cables.
25. Disconnect rudder control cable turnbuckles aft of pilot's pedestal and pull cables through to clear keel beam. Stow cables.

CAUTION

Throttle cable can be damaged when improperly handled or stored. Refer to Section V for instructions on handling and storage of engine throttle cables.

26. Disconnect engine throttle cables and remove from aircraft. Store cables.
27. Remove left tip tank tailcone and fin.

Note

Remove the right tip tank tailcone and fin when removing the wing from the left side of fuselage.

28. Disconnect wing leading edge anti-ice hoses and temperature sensor wiring at inboard leading edge of wing.
29. Support keel beam and remove four bolts at each end of keel beam.
30. Check that all plumbing and electrical wiring is disconnected between keel beam and wing.
31. Pull forward end of keel beam down. It is necessary for the keel beam to be moved forward during removal to allow clearance for two vent hoses at aft end of keel beam.
32. Remove keel beam from aircraft and place on dolly (see figure 2-1A).

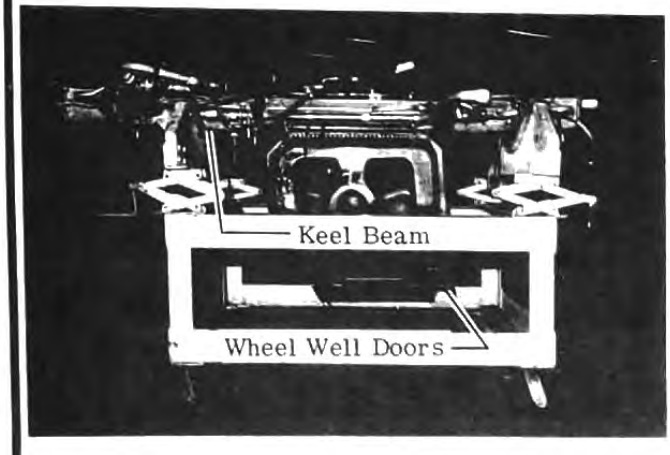

Figure 2-1A. Keel Beam Support Dolly

33. Raise main landing gears sufficiently to clear wing mating dolly and tie landing gears in place with ropes.
34. Center mating dolly under wing and raise dolly until wing is supported. Install safety pins in mating dolly (see figure 2-1B).
35. Gain access to the upper wing torsion link bolts in both sides of cabin. Remove insulation and sealer from bolts and castellated nuts (see figure 2-1C).
36. Remove cotter pins and remove nuts from torsion link bolts.
37. Use drive pin and remove upper wing torsion link bolts from forward wing attach fittings.
38. Remove nuts from six remaining wing attach fitting bolts. Use drive pin and remove bolts (see figure 2-1D).
39. Remove safety pins from mating dolly and slowly lower wing. Check that all lines and wiring are disconnected and clear of obstruction.

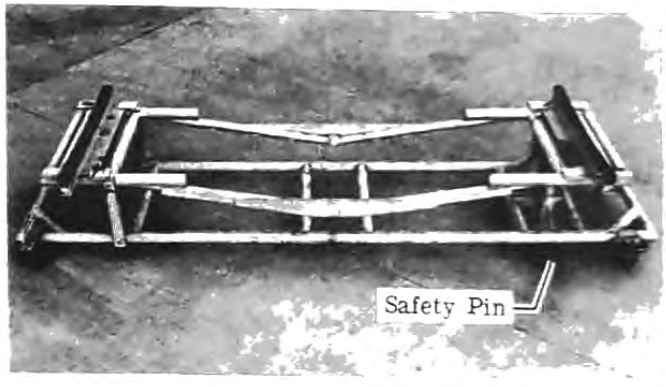

(Hydraulic Power Unit Not Shown)

Figure 2-1B. Wing Mating Dolly

40. Lower left wing as low as the mating dolly will permit.
41. Raise fuselage with engine pylon jacks and nose jack sufficiently to allow left tip tank to clear fuselage.

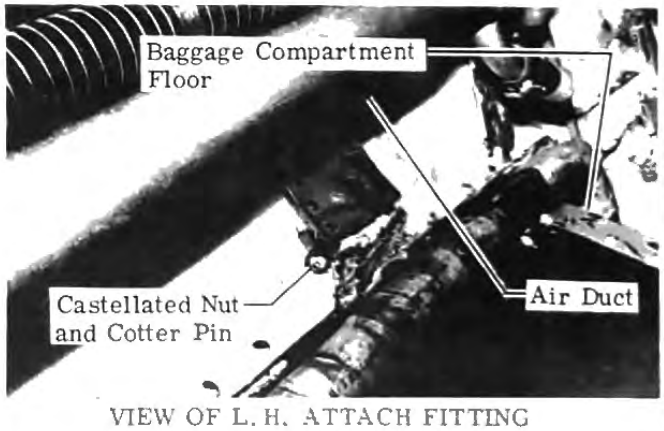

VIEW OF L.H. ATTACH FITTING IN CABIN LOOKING FORWARD

Figure 2-1C. Wing Torsion Link Fitting Bolt

42. Roll mating dolly to the right of the fuselage until left tip tank clears the fuselage. Use care to prevent dents and scratches to wing or tip tank.
43. After wing is removed from fuselage, install spreader bar between keel beam mounting pads (see figure 2-1E).

CAUTION

The spreader bar must remain installed at all times when wing is removed from the airplane. This is to prevent structural damage to fuselage.

b. Wing Installation.

Note

- Prior to installing wing the wing attach fittings should be inspected, a dye penetrant check performed and then treated with zinc chromate primer. The wing attach fitting bushings should be taped to prevent primer from entering bushings.
- Apply sealant and foam insulation in areas as required to replace sealant and foam previously removed.

1. Install front lower attach fitting torsion links using new bolts, nuts and washers. Torque nuts 450 to 500 inch-pounds.
2. Position both torsion links in the vertical position and assure that the attach fitting bushings are in place.
3. Remove spreader bar from fuselage.

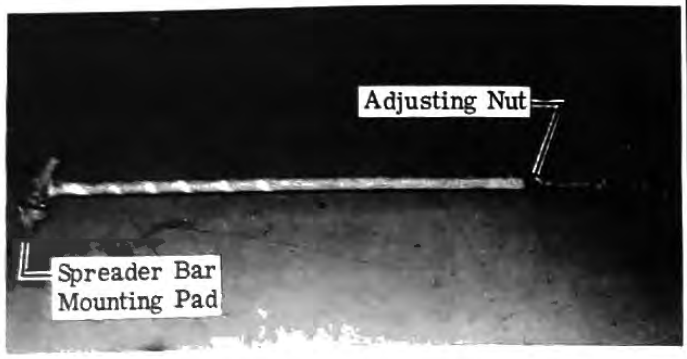

(Install spreader bar between keel beam mounting pads on fuselage.)

Figure 2-1E. Spreader Bar

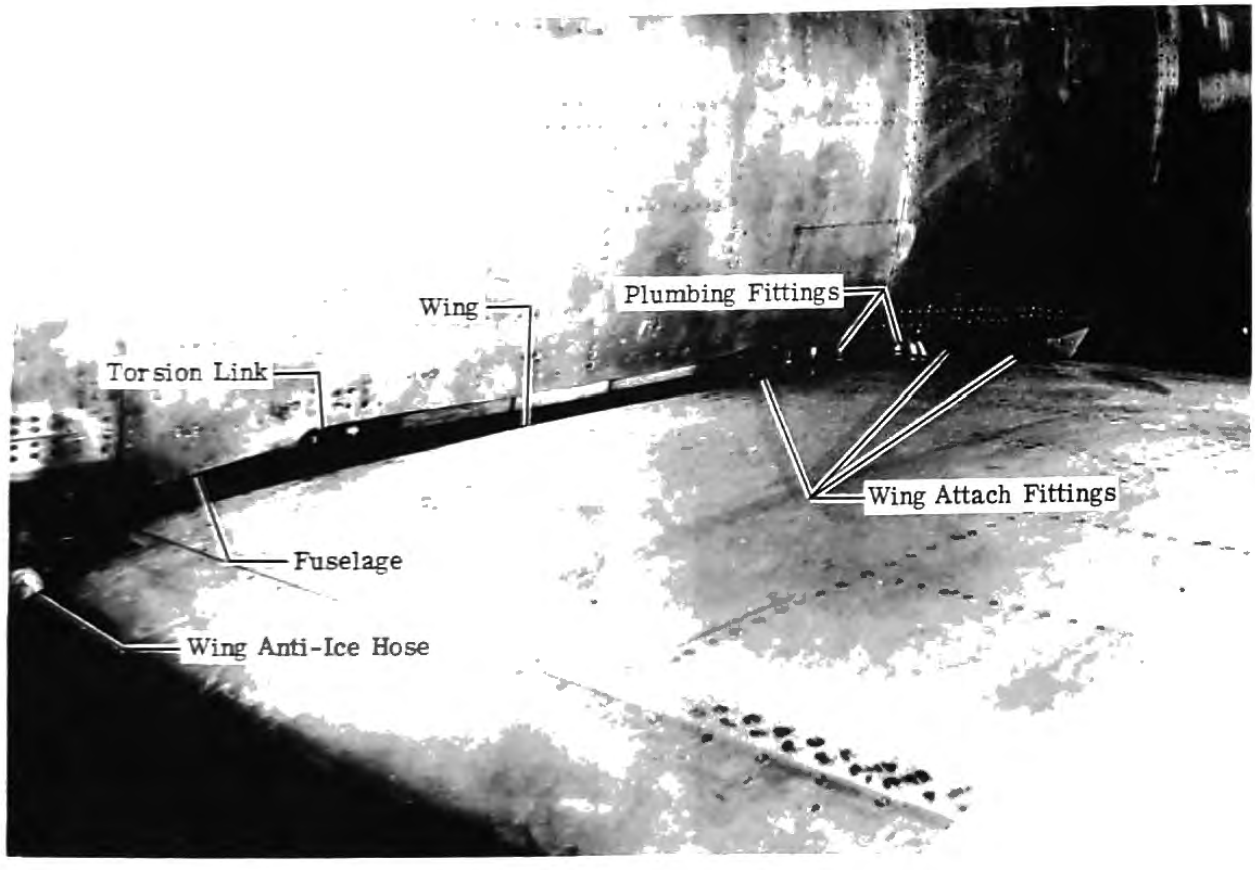

VIEW OF L.H. WING ATTACH FITTINGS LOOKING AFT

Figure 2-1D. Wing to Fuselage Attach Fittings

4. Using wing mating dolly, move wing under fuselage in the reverse order in which wing was removed. Use special care not to damage wing or fuselage.
5. After wing is positioned under fuselage, raise wing as high as wing mating dolly will permit. Install safety pins in dolly.
6. Slowly lower fuselage on wing by lowering the two pylon jacks and nose jack. Use special precaution that cables and plumbing are clear of obstructions.
7. Position front wing attach torsion links to fit in upper fitting of fuselage.
8. Adjust jacks until the eight fuselage to wing attach fitting bolt holes align.

Note

- Install wing transfer dolly under each wing and adjust transfer dolly to assist in alignment of wing attach fitting holes (See figure 2-1F).

- Use centering pins to align wing attach bolt holes. Install centering pins and bolts from the forward side of wing attach fitting. Install wing attach bolts starting at the forward fittings and progress aft.

- Use a 9X rivet gun or equivalent with a flush set and a drive pin to drive centering pins and wing attach bolts into fittings.

9. Drive centering pins from forward side of upper wing attach fitting torsion links using drive pin and rivet gun. Use special care to prevent damage to attach fittings. (Upper forward attach fittings are accessible from inside cabin.)
10. Drive new wing attach bolts in behind centering pins, driving out centering pins from holes.

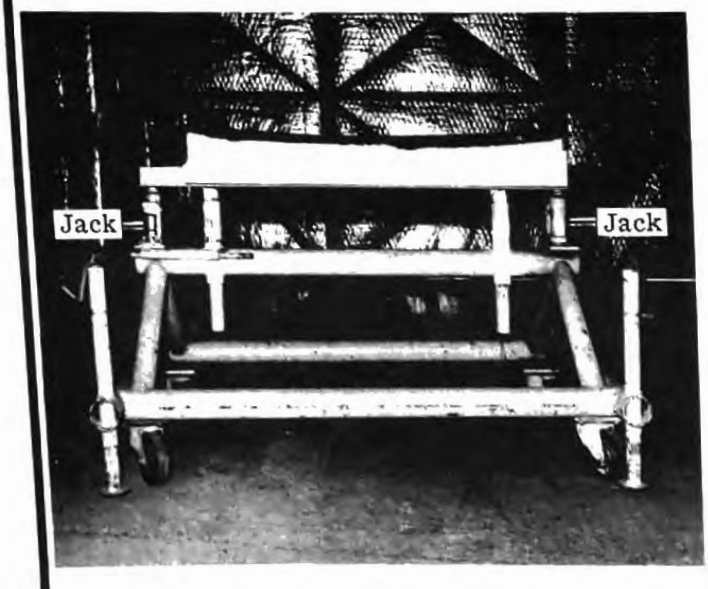

Figure 2-1F. Wing Transfer Dolly

11. Install washers and castellated nuts on upper torsion link attach bolts and torque nuts 270 to 300 inch-pounds. Install cotter pin and apply Proseal 890 Sealant around bolt head and nut. This is to prevent cabin pressure from leaking through fitting.
12. Check next aft wing attach bolt holes for alignment.
13. After fittings are aligned, drive centering pins in fittings using rivet gun and drive pin.
14. Drive new attach fitting bolts in fittings driving out centering pin.
15. Install washers and self locking nuts on attach bolts and torque nuts 450 to 500 inch-pounds.

CAUTION

When driving pins and bolts for the four remaining fittings, use a bucking bar and backup wing attach fittings. This is to prevent damage to attach fitting and to keep it from spreading.

16. Install remaining wing attach bolts and install washers and self locking nuts. Torque nuts 450 to 500 inch-pounds.
17. Lower wing mating dolly and transfer dolly and remove from under aircraft.
18. Perform a dye penetrant check of keel beam attach fittings and apply zinc chromate primer on keel beam mounting pads as required. Inspect keel beam bolts for general condition.
19. Position keel beam under fuselage. Route vent tubes at aft end of keel beam into fuselage.
20. Push keel beam in between mounting pads and secure keel beam using existing bolts, nuts and washers. Torque nuts 100 to 140 inch-pounds.

Note

Forward keel beam attach bolts must be installed through frame 15. The forward keel beam fitting is accessible forward of frame 15 under floorboard.

21. Untie rope and lower main landing gear.
22. Connect plumbing and electrical wiring between keel beam and wing.
23. Connect plumbing and electrical wiring between fuselage and wing.
24. Connect wing leading edge anti-ice hoses and temperature sensor wiring.
25. Install tip tank tailcone and fin using existing hardware.
26. Install engine throttle cables per Section V.

CAUTION

Carefully check for the correct routing of flight control cables; misrouting of cables may result in wear of components or the binding of cables.

27. Route flight control cables through frame 15 and keel beam and connect turnbuckles. Rig cables per this section.
28. Route aileron cables in wing and connect turnbuckles and install pulleys and guide pins. Rig cables per this section.
29. Install cable fairleads and pressure seals at frame 15.
30. Install flux valve connector in baggage compartment and reseal connectors. Replace liner.
31. Install cabin floorboards.
32. Install interior arm rests.
33. Install cabin seats and divan.
34. Apply sealant between trailing edge of wing to fuselage fairing inboard of wing flaps and install rivets that were previously removed.

CAUTION

Use correct length of screws when installing wing fillet fairing. Screws that are too long may cause damage to sealed dome nutplates in the wing fuel area and cabin area.

35. Apply aerodynamic sealant around wing fillet fairing and install screws.
36. Install ADF antenna if necessary under fuselage.
37. Check that all plumbing and electrical wiring is connected.
38. Install wing flaps.

CAUTION

Check that flaps, spoilers and landing gear are clear of obstructions prior to operation.

39. Service hydraulic reservoir.
40. Reinstall and connect aircraft batteries.
41. Apply pressure to hydraulic system and perform leak check.
42. Cycle flaps, spoilers and landing gear until air is bled from the hydraulic system.
43. Perform landing gear operational check per Section III.
44. Position landing gear to down and locked.

CAUTION

Assure that gears are locked prior to performing step 45.

45. Lower aircraft and remove jack and jack pads from aircraft.
46. Perform flight controls operational check per this section.

CAUTION

Check that control cables are correctly routed and are not rubbing or binding.

47. Fuel aircraft and perform leak check and fuel system operational check per Section V.
48. Perform operational checks as required on all systems that were previously disconnected.
49. Remove wing protective covering and install wing and fuselage access doors.

LIGHTNING STRIKE PROTECTION [A]. Lightning strike protection consists of aluminum tapes bonded to the wing leading edges, fuselage radome, and empennage bullet. The tapes are bonded to the fiberglas surfaces with Class I Synthetic Rubber Type Adhesive - EC1300, manufactured by the Minnesota Mining & Manufacturing Company.

VORTEX GENERATORS. Vortex generators are installed on the upper and lower wing surfaces to improve flight performance. The vortex generators are bonded to the wing surfaces; therefore, care should be exercised when performing aircraft maintenance in these areas to avoid damage to, or removal of a generator.

Note

- No more than three (3) vortex generators (any location) may be missing from one wing and not more than six (6) on both wings.
- Missing vortex generators should be replaced as soon as possible.

VORTEX GENERATOR REPLACEMENT. (See figure 2-1G).

a. All surfaces to be cemented shall be thoroughly cleaned of all foreign matter using a clean cloth dampened with methyl ethyl ketone or other suitable cleaning solvent. When all contaminates have been removed and, while the surface is still wet, wipe with a clean dry cloth.

b. Mix EC-2216 epoxy adhesive, manufactured by the Minnesota Mining and Manufacturing Company, as follows:

1. Add 100 parts by weight of EC-2216B to 140 parts by weight of EC-2216A.
2. Mix until the components blend to a uniform medium gray color.

Note

The pot life of the mixed adhesive is approximately 2 hours.

c. Apply the mixed adhesive to the cleaned surfaces with a spatula.

d. Locate the vortex generator as shown in figure 2-1G and press to the wing surface to effect the bond.

[A] Aircraft 23-003 thru 23-005.

Note

The only pressure required during the cure of EC-2216 is that necessary to keep parts in alignment and to overcome distortion and thermal expansion.

e. Allow bond to cure at room temperature for 24 hours. Full cure is achieved in 3 to 7 days at room temperature. Cure may be accelerated by heating for 2 hours at 150° F or 45 minutes at 200° F.

CONTROL CABLE DAMAGE LIMITATIONS. (See figure 2-2.) The control cables vary from 1/16 to 3/16 inch in diameter. Cables of 1/8 inch and larger are composed of 7 strands of 19 wires each totaling 133 wires. Cables of 1/16 and 3/32 inch in diameter are composed of 7 strands of 7 wires each totaling 49 wires. Failure of the cables is never abrupt but is progressive over periods of extended use. Some broken wires may be evident soon after placing the cables in service due to some wires being under greater tension or due to variation of wire hardness. During normal service, few additional broken wires will be encountered after these overstressed or over-hard wires have broken. Control cable strength is as much as 50% in excess of design loads so control cables may have broken wires and still be capable of carrying the design load of the cable. At each regular inspection period, watch for frayed cables. Cables may be inspected for broken wires by passing a cloth along the length of the cable. Broken wires will be indicated where the cloth is snagged. Replace any 7 x 19 cable that shows more than 6 wires broken in any 1-inch length of any 7 x 7 cable that shows more than 3 wires broken in any 1-inch length. Assure a close inspection is made in the length of a cable normally passing over a pulley or through a fairlead.

STATIC REBALANCING OF CONTROL SURFACES. (See figure 2-3.) The aileron, elevator, and rudder control surfaces are designed with an overbalance (nose heavy) condition. These surfaces are balanced after initial paint application with the amount of overbalance and unit weight recorded on the outboard rib surface of the ailerons and elevators and on the bottom rib of the rudder.

Note

When any portion of a control surface is repainted, repaired, or replaced, a check must be made to determine if the balance is still within the prescribed limits. Balancing must be accomplished when a surface area of 12 square inches or greater is repainted.

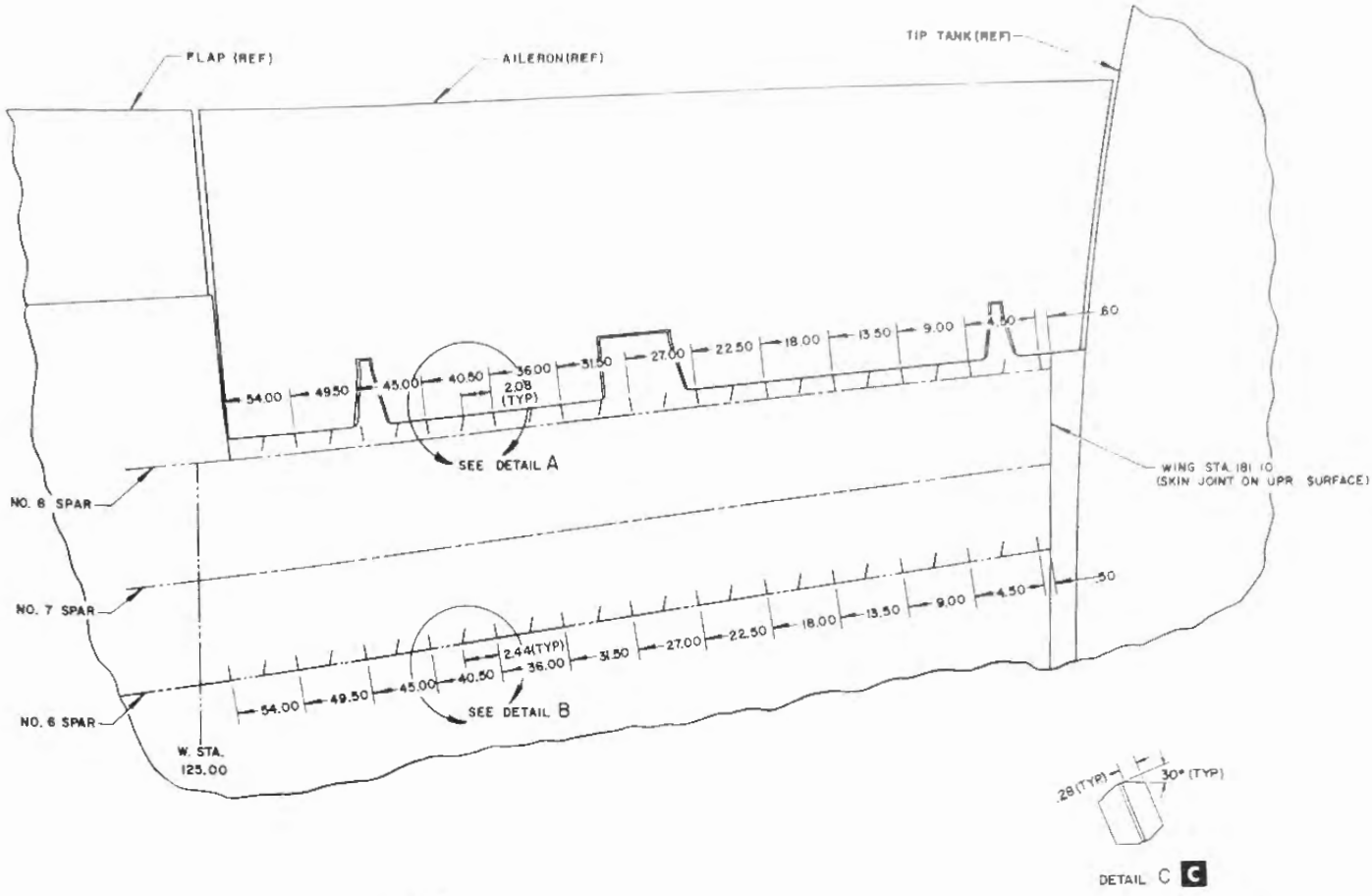

Note

Vortex generator location typical both wings. Upper left installation shown, lower installation identical except generators to be located on a line **A** .50 inch forward (**B** .30 inch aft) of spar number 6 at Station 181.10 and **A** .95 inch (**B** 1.80 inch) forward of spar number 6 at Station 125.00.

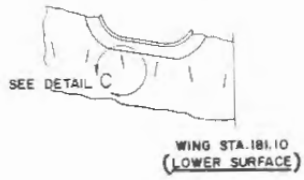

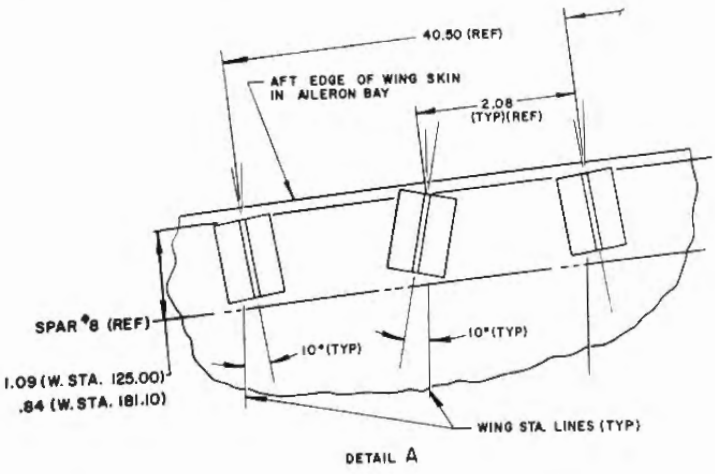

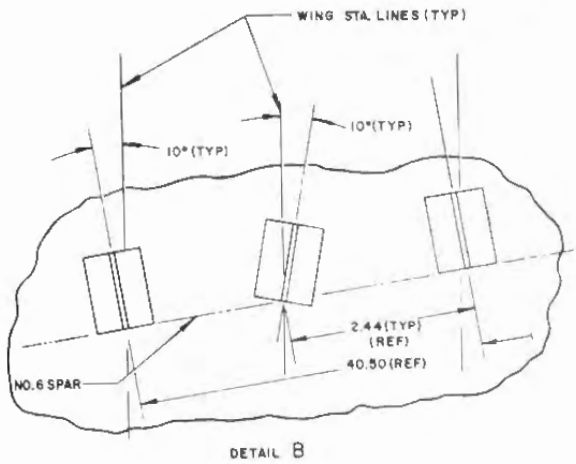

A Aircraft 23-003 thru 23-039
B Aircraft 23-040 thru 23-099
C Aircraft 23-070 thru 23-099

Figure 2-1G. Vortex Generator Location and Installation

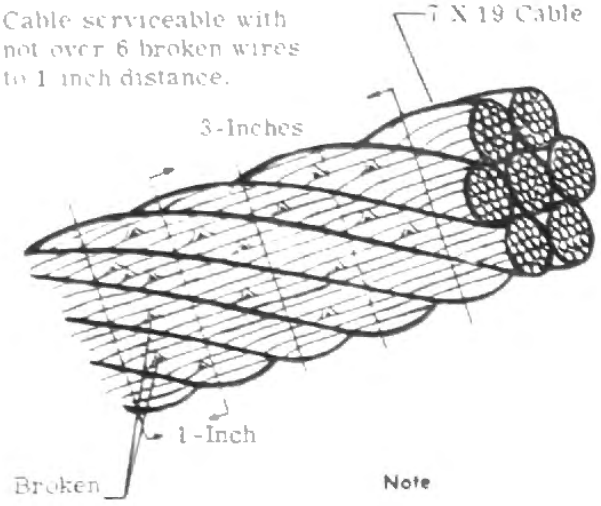

Note

A cable with more than 6 broken wires in a 1-inch distance must be replaced.

Figure 2-2. Typical Control Damage Limits

CONTROL SURFACE BALANCE CHECK. (See figure 2-3.)

a. Accurately weigh each part added or removed to within ±.03 pound.

b. Locate center of gravity of net change and measure distance to hinge line.

c. Determine the net change by using the formula M = WR.

1. M = Change in overbalance.
2. W = Net change.
3. R = Distance between hinge line and net center of gravity located in step b.

Note

"R" is negative when center of gravity of change falls aft of the hinge line.

d. Add or subtract "M," according to its sign, from the overbalance and change the balance weight if required to stay within the prescribed overbalance limits.

e. Remove the old overbalance and unit weight figures recorded on the control surface and apply the new overbalance and unit weight figures.

f. Prior to Balancing Control Surfaces.

1. All hinge bolts must be in place.
2. Tabs to be in neutral position. Tape down free end of aileron balance tab to hold in neutral.
3. Move elevator arm to up position.
4. Remove aileron actuator arm and tape mechanical tab arm to aileron surface.

CONTROL SURFACE BALANCING. (See figure 2-3.)

a. Remove affected control surface from aircraft.

b. Support control surface on balance stands with hinge bolts resting on knife edges.

c. Move a known weight until control surface is balanced to level condition.

d. Measure from hinge point to center of gravity on weight.

e. Multiply this distance in inches by weight in pounds to obtain inch-pounds overbalance.

f. If the overbalance is not within the prescribed limits given on figure 2-3, correct condition by adding to or subtracting from the balance weights in the leading edge.

AILERON CONTROL SYSTEM. (See figure 2-4.)

Lateral control of the aircraft is provided by the ailerons. The ailerons are of all metal construction and are statically balanced by lead weights in the leading edges. Aileron control is provided manually by the control wheels or automatically by the autopilot system. An aileron-rudder interconnect is installed under the floorboards to increase aircraft lateral stability.

a. Control Column Wheels. The control column wheels transmit pilot effort directly to the ailerons by a series of cables and pulleys. Control wheel rotation is limited to 110° in either direction from the neutral position.

b. Column Interconnection. The two control columns are interconnected by a torque tube. Aileron operating interconnection between the two control wheels is by cables connected to a sector on each control wheel. A turnbuckle is installed in the RH control column and rigging holes are provided in each control wheel sector for rigging purposes.

c. Autopilot Connection. The autopilot servomechanism is connected to the aileron control cables by clamps under the cockpit floorboard. The autopilot contains a slip clutch set at 150 (±15) inch-pounds which allows the pilot to override the autopilot system any time.

AILERON CONTROL SYSTEM - TROUBLE SHOOTING.

TROUBLE	PROBABLE CAUSE	CORRECTION
AILERONS ARE NOT IN NEUTRAL POSITION WHEN CONTROL WHEELS ARE CENTERED.	Aileron cable system is not rigged properly.	Rig aileron control system.

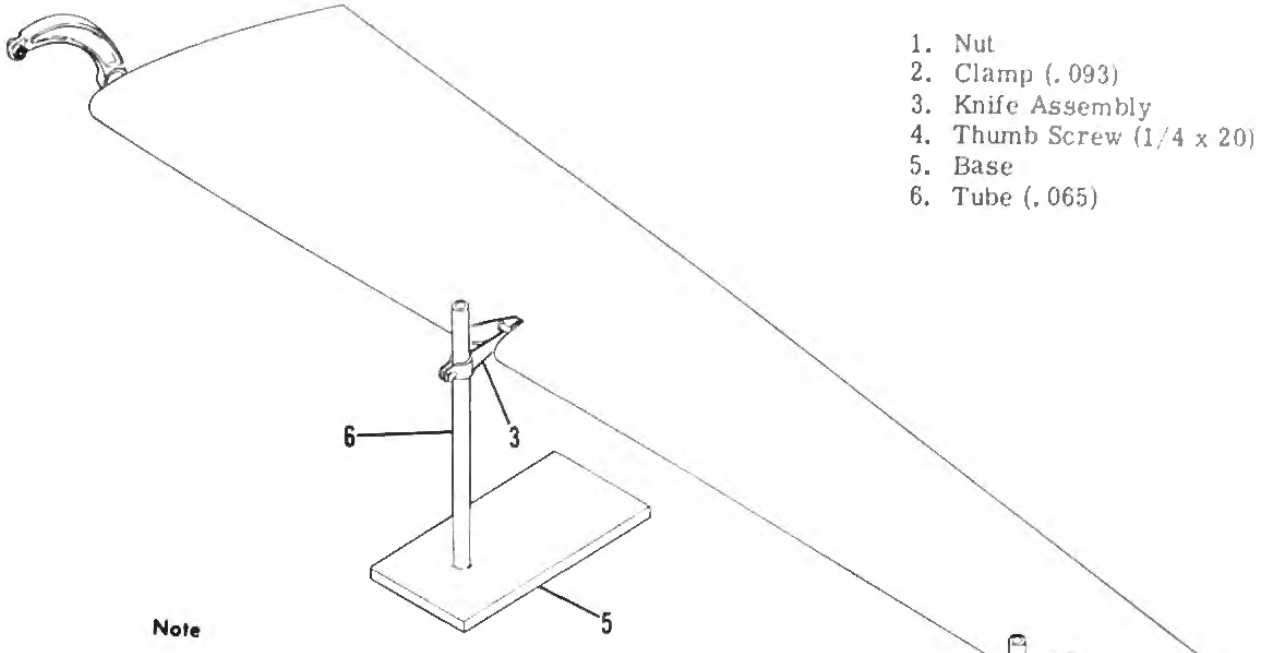

1. Nut
2. Clamp (.093)
3. Knife Assembly
4. Thumb Screw (1/4 x 20)
5. Base
6. Tube (.065)

Note

All parts made from 4130 steel or equivalent. Weld nut to clamp.

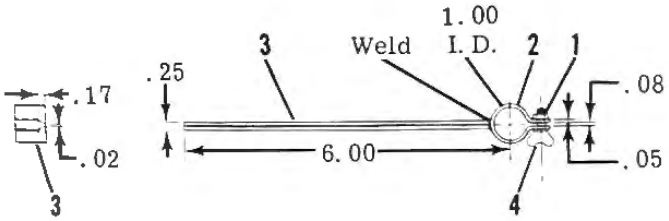

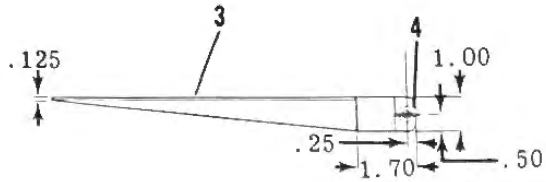

CONTROL SURFACE	BALANCE LIMIT (Inch-Pounds)
Aileron	15 to 16 (Overbalance)
Elevator	A -0.5 to +0.5 (Static Bal.) B 2.0 to 2.5 (Overbalance)
Rudder	C 0.0 to 0.5 (Overbalance) D 2.0 to 2.5 (Overbalance)

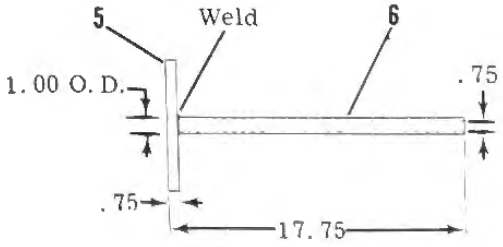

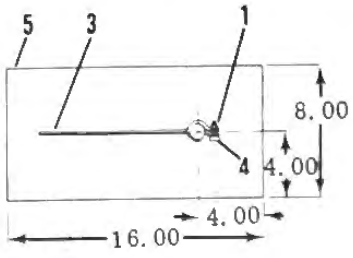

A Aircraft 23-003 thru 23-099 except aircraft modified by SK23/24-248.
B Aircraft 23-003 thru 23-099 modified by SK23/24-248.
C Aircraft 23-003 thru 23-099 except aircraft modified by SK23/24-249.
D Aircraft 23-003 thru 23-099 modified by SK23/24-249.

Figure 2-3. Control Surface Balance Stand.

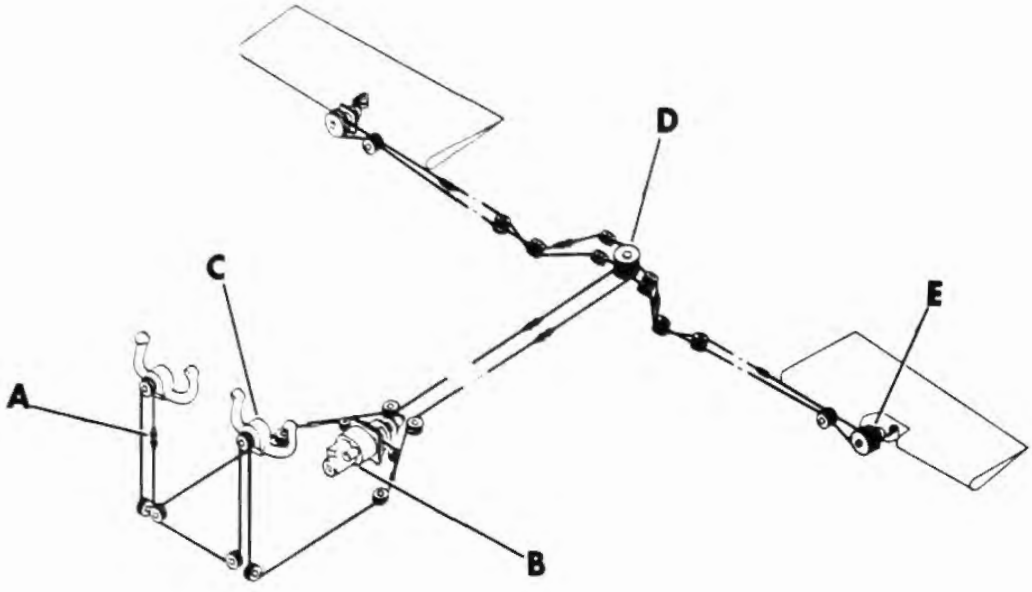

1. Control Column - RH
2. Access Cover
3. Turnbuckle
4. Roll Servo - Autopilot
5. Cover
6. Spacer
7. Shaft
8. Support - Bearing
9. Control Column - LH
10. Bearing Plate
11. Rigging Hole
12. Sector
13. Plate
14. Cover
15. Trim Switch
16. Plate
17. Switch - Wheel Master
18. Control Wheel - LH
19. Nut - Control Wheel
20. Washer
21. Switch Microphone
22. Control Column Clock Mount
23. Control Column Clock
24. Bracket - Aileron Sector
25. Rigging Hole
26. Bearing
27. Bracket
28. Aileron Sector
29. Fitting - Control Column
30. Clip - Pulley
31. Coverplate - RH
32. Bearing Assembly
33. Pin
34. Roll Pin
35. Rigging Hole
36. Bracket
37. Key
38. Cable Guard - Upper
39. Stop Bolt
40. Bearing Support
41. Aileron Control Yoke
42. Aileron Drive Clevis
43. Cable Retainer
44. Aileron Drive Pulley
45. Cable Guard - Lower
46. Shaft
47. Autopilot Followup
48. Arm
49. Arm
50. Scale
51. Handle
52. Pointer
53. Tensiometer
54. Cable

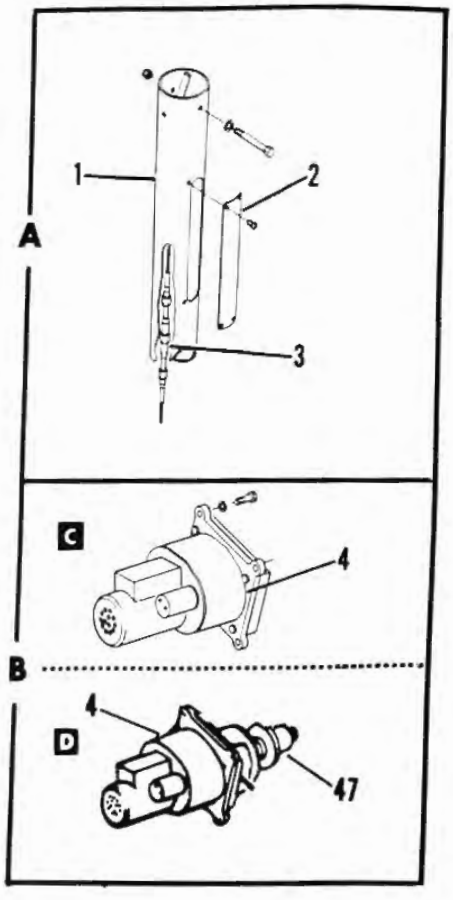

[C] Aircraft 23-003 thru 23-099 not modified by SK23/24-217.

[D] Aircraft 23-003 thru 23-099 modified by SK23/24-217.

Figure 2-4. Aileron Control System Installation (Sheet 1 of 3)

Learjet Temporary Service Manual Revision

MANUAL AFFECTED: Gates Learjet Model 23 Service Manual.

FILING INSTRUCTIONS: Insert adjacent to page 2-6 and retain until further notice.

REASON: To update and clarify Figure 2-4.

INSTRUCTIONS: Revise portion of Figure 2-4 to appear as follows:

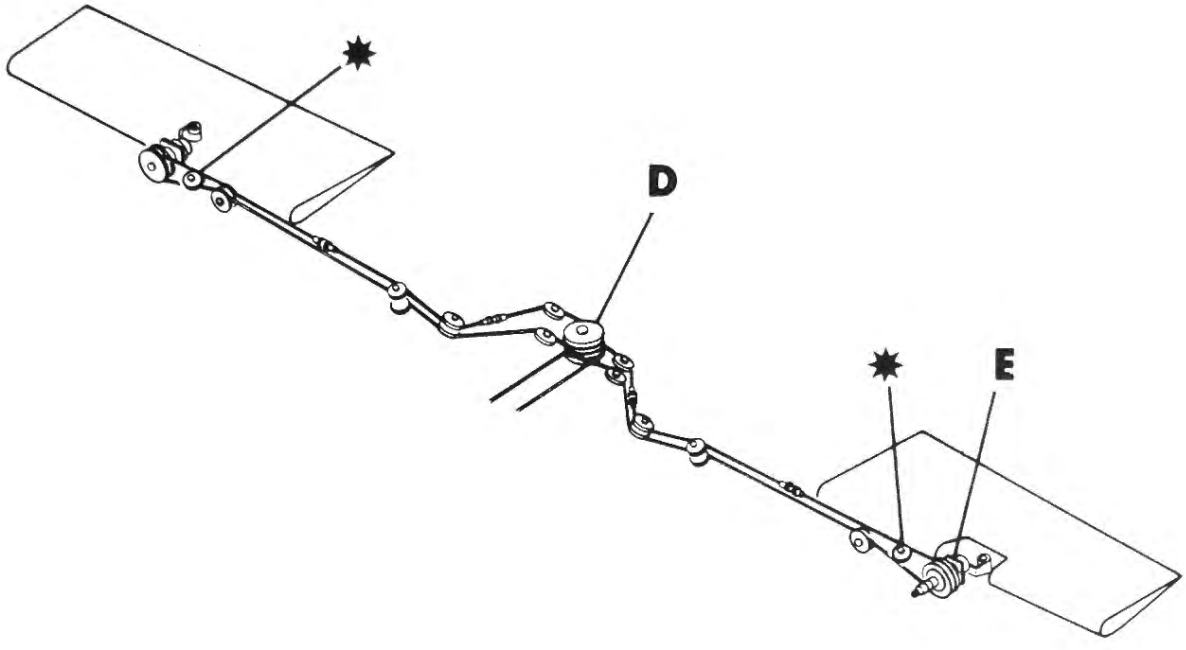

✸This pulley effective only on aircraft modified per AMK 77-1.

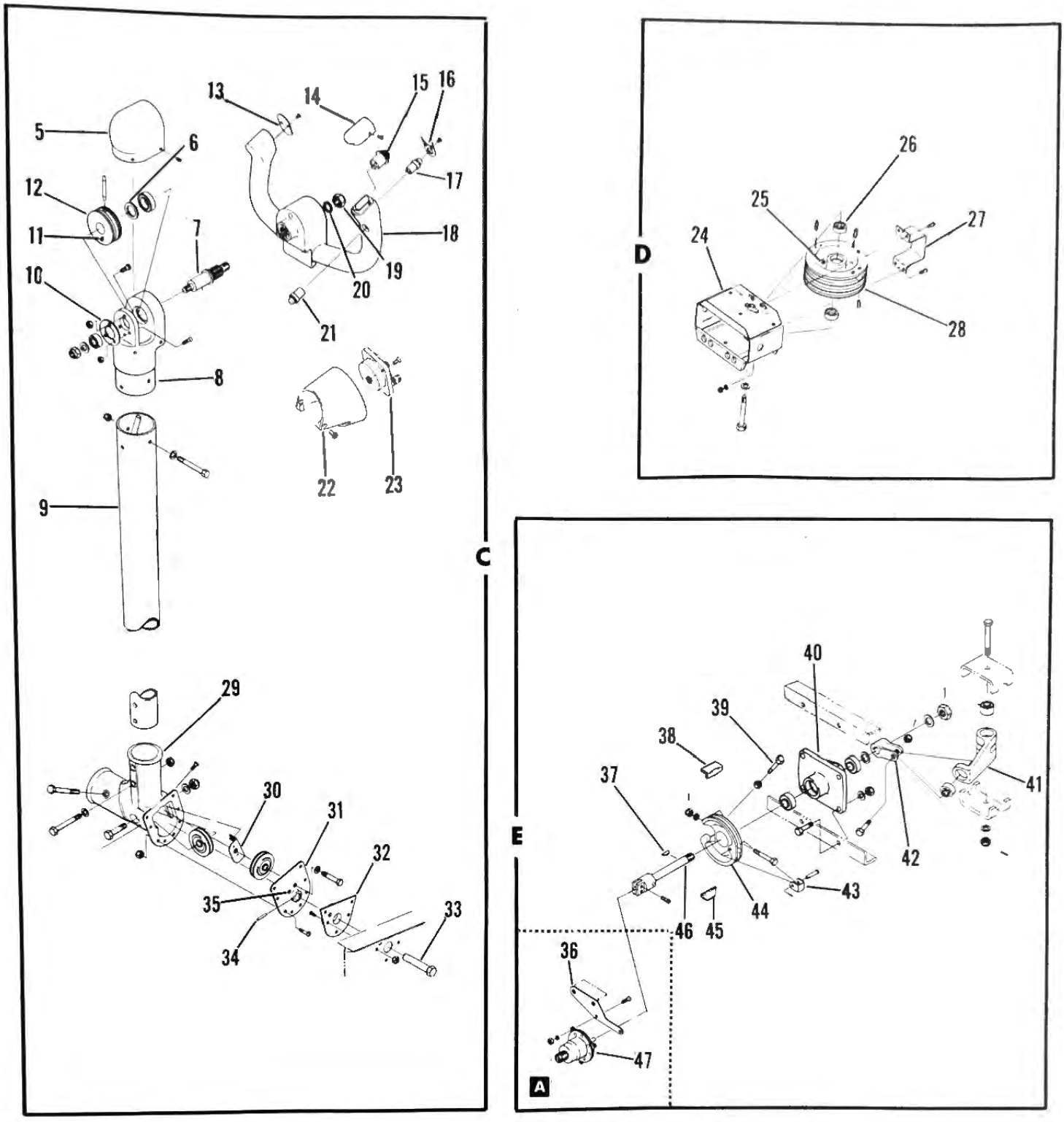

A Aircraft 23-003 thru 23-099 not modified by SK23/24-217.

Figure 2-4. Aileron Control System Installation (Sheet 2 of 3)

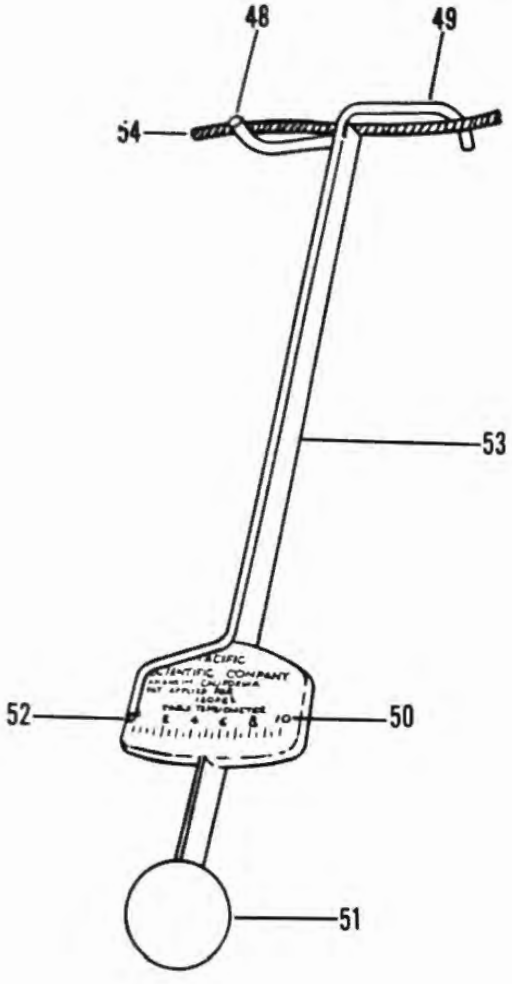

CALIBRATION CHART - 1601162 CABLE TENSIOMETER FOR 1/16-INCH CABLES	
Cable Tension	Scale Reading
0	0
10	1.5
20	2.9
30	4.1
40	5.3
50	6.4
60	7.5
70	8.7
80	9.8

Operating Instructions:

a. Use tensiometer for checking cable tension when rigging aileron roll servo cables.
b. Install tensiometer on cable as shown.
c. To obtain a proper reading, arm (49) must first be positioned on cable.
d. Take scale reading as arm (48) makes contact with cable.
e. Convert scale reading to applicable cable tension on calibration chart.

Note

Check out tensiometer on another 1/16-inch cable in aircraft. Compare reading obtained against another tensiometer of known accuracy. If a variation in reading exists, adjust pointer as required.

Figure 2-4. Aileron Control System Installation (Sheet 3 of 3)

Learjet Temporary Service Manual Revision

SERVICE MANUALS AFFECTED: Gates Learjet Models 23, 24, 24B and 25.

FILING INSTRUCTIONS: File adjacent to page as listed below and retain until further notice.

Model 23 - File adjacent to page 2-9.
Model 24 - File adjacent to page 2-9.
Model 24B - File adjacent to page 2-10.
Model 25 - File adjacent to page 2-9.

REASON: To reflect safety wiring.

INSTRUCTIONS:

1. Model 23 - Under AILERON CONTROL SYSTEM RIGGING, revise steps m. and n. as follows:

   m. Adjust the up stops for both ailerons to obtain 18° (±1°) up travel. Secure stop bolts with jamnuts. On aircraft incorporating SB 23/24/25-266, safety wire stop bolts.
   n. Adjust the down stops for both ailerons to obtain 18° (±2°) down travel. Secure stop bolts with jamnuts. On aircraft incorporating SB 23/24/25-266, safety wire stop bolts.

2. Model 24 - Under AILERON CONTROL SYSTEM RIGGING, revise steps m. and n. as follows:

   m. Adjust the up stops for both ailerons to obtain 18° (±1°) up travel. Secure stop bolts with jamnuts. On aircraft incorporating SB 23/24/25-266, safety wire stop bolts.
   n. Adjust the down stops for both ailerons to obtain 18° (±2°) down travel. Secure stop bolts with jamnuts. On aircraft incorporating SB 23/24/25-266, safety wire stop bolts.

3. Models 24B and 25 - Under AILERON CONTROL SYSTEM RIGGING, revise steps n. and o. as follows:

   n. Adjust the up stops for both ailerons to obtain 18° (±1°) up travel. Secure stop bolts with jamnuts. On aircraft incorporating SB 23/24/25-266, safety wire stop bolts.
   o. Adjust the down stops for both ailerons to obtain 18° (±2°) down travel. Secure stop bolts with jamnuts. On aircraft incorporating SB 23/24/25-266, safety wire stop bolts.

November 18, 1975

TROUBLE	PROBABLE CAUSE	CORRECTION
INCORRECT AILERON TRAVEL.	Travel stops not adjusted properly.	Adjust travel stops.
CONTROL WHEEL MOVEMENT NOT SMOOTH OR EXCESSIVE FORCE REQUIRED TO MOVE AILERONS.	Binding in cable system.	Check cable tension. Check all pulleys and sectors for mechanical defects.
	Autopilot engaged.	Disengage autopilot.

REMOVAL AND INSTALLATION OF AILERON SYSTEM COMPONENTS. Removal and installation of aileron system components should be performed as shown in the exploded view sequence in figure 2-4.

AILERON CONTROL SYSTEM - RIGGING. (See figure 2-5A.) When a cable is removed and reattached, perform an operational check by using the control wheel. When the control wheel is moved to the right, the right hand aileron will move up and the left hand aileron will move down. When the control wheel is moved to the left, the left hand aileron will move up and the right hand aileron will move down.

Note

Aircraft should be on jacks prior to checking cable tensions. All cable tensions are based on a temperature of 75° F.

a. Remove access covers from copilot's control column, cabin center aisle, bottom center section, wing cable turnbuckles, and disconnect aileron servo cable.
b. Center control wheels and insert rigging pins in both control wheel sectors.

Note

Round off end of rigging pin prior to use to prevent damage to control column wiring.

c. Insert rigging pin in sector under center wing.
d. Attach contour plate to wing.
e. Adjust the appropriate turnbuckles until both ailerons are synchronous at the trailing edge. Synchronize ailerons to a droop neutral position of 0.50 (±0.06) inch below the contour plates.
f. After both ailerons have been synchronized, adjust aileron control system cables to 75 (±10) pounds.

Note

When cable turnbuckles are loosened or tightened to adjust cable tension, the ailerons may become out of synchronization and it will be necessary to readjust and synchronize the ailerons. Repeat these procedures alternately until both ailerons are synchronized and correct cable tension is obtained.

g. Attach aileron servo cable to aileron control system cables.
h. Adjust servo cable tension to 25 (±5) pounds.
i. Check tension on aileron control system cables aft of servo cable attachment for 75 (±10) pounds.
j. Check tension on aileron control system cables forward of servo cable attachment for 100 (±10) pounds.

Note

This difference of cable tension is normal and is caused by the tension on the servo cable.

k. Safety turnbuckles and remove rigging pins.
l. Attach clinometers to ailerons to measure travel.
m. Adjust the up stops for both ailerons to obtain 18° (±2°) up travel.
n. Adjust the down stops for both ailerons to obtain 18° (±2°) down travel. The down stops should be set to match the up stops on the opposite aileron.

Note

Travel is measured from "droop neutral" position 0.50 (±.06) inch below the contour plate. If an aileron will achieve the required travel in only one direction, it indicates that the drive yoke is not centered on the hinge line. The shim washers between the yoke bearings and the aileron drive bracket should be changed as necessary to obtain the correct travel.

o. Check that the fixed stops in the control column heads do not contact until after the primary stops on the aileron drive pulley are reached.
p. Operate ailerons several times by moving the control wheel and checking for freedom of movement.

Note

Check capstan slip clutch adjustment. (Refer to AUTOPILOT (ROLL) CAPSTAN SLIP CLUTCH CHECK AND ADJUSTMENT, this section.)

q. Reinstall access covers.
r. Install floorboards and secure with all retaining screws prior to flying aircraft.

AUTOPILOT (ROLL) CAPSTAN SLIP CLUTCH CHECK AND ADJUSTMENT. (See figure 2-5.)

a. Capstan Slip Clutch Check.

1. Assure that aileron control system and autopilot roll servo cables are properly rigged.
2. Remove carpet and floorboards to gain access to autopilot roll servo (4, figure 2-4).

CAUTION

Care should be taken to prevent foreign objects and contamination from entering slip clutch assembly while servo is removed.

3. Disconnect electrical plug from roll servo and remove roll servo from aircraft.
4. Bolt torque adapter (22) to mounting plate (1), assuring that torque adapter gear is properly mated to cable drum assembly (23).

Note

The capstan clutch is set to slip at 150 (±15) inch-pounds. This clutch setting must be converted when using torque adapter (22). A 4.5:1 gear ratio exists between the torque adapter gear and the cable drum assembly, requiring a torque value of 30 to 36 inch-pounds.

5. Attach a torque wrench to torque adapter (22) and check for clutch slippage of 30 to 36 inch-pounds.

Note

Hold torque wrench against one side of the floorboard structure so that wrench does not move. Move control wheel fully to left and right several times until clutch slippage is reasonably smooth. Observe torque wrench dial and take reading while moving control wheel through its full travel range.

6. If slip clutch setting is within tolerance, reinstall roll servo, connect electrical plug, and install floorboards and carpet.
7. If slip clutch is not within tolerance, proceed with step b.

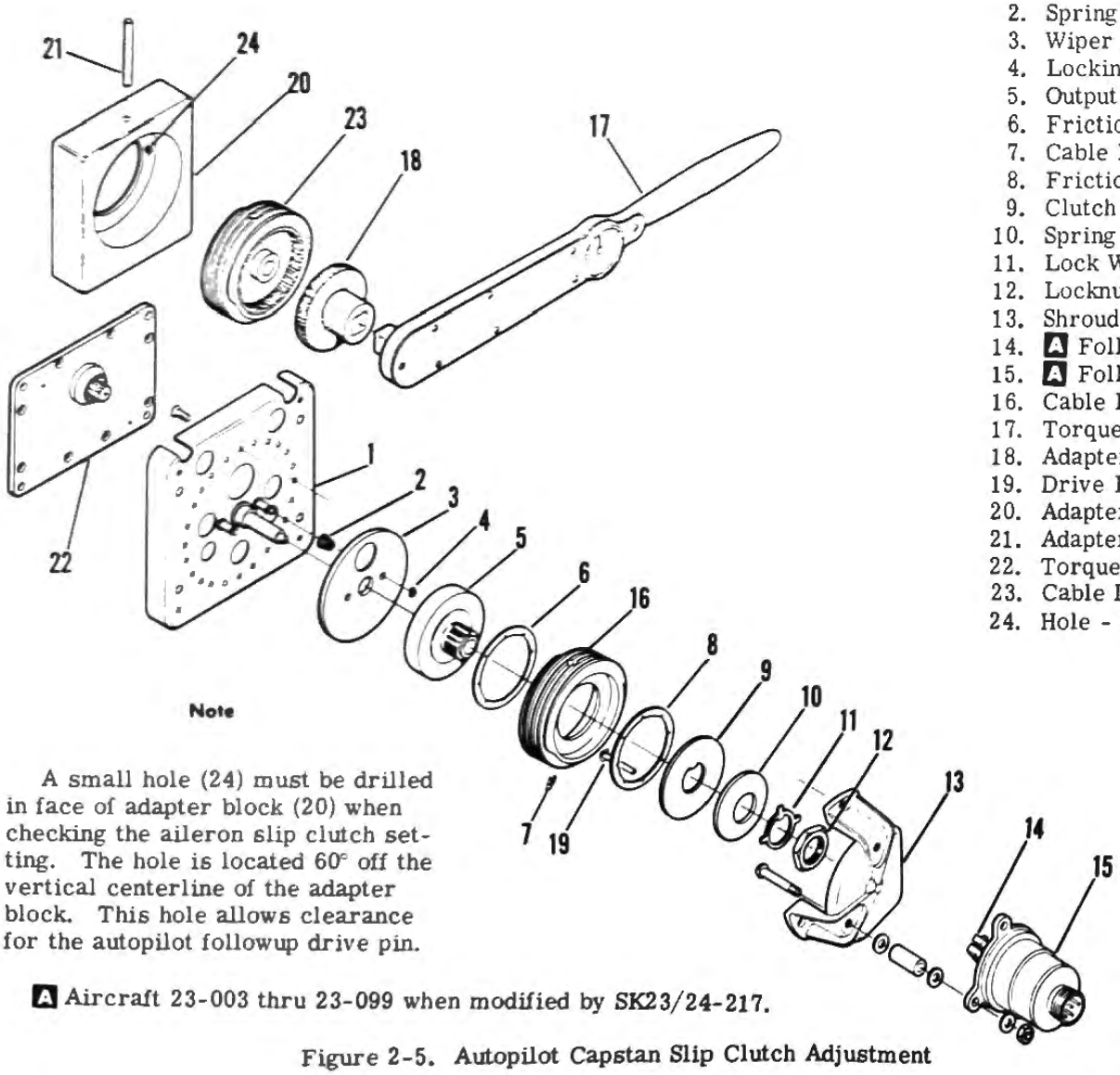

1. Mounting Plate
2. Spring
3. Wiper Disc
4. Locking Ring
5. Output Gear
6. Friction Disc
7. Cable Retainer
8. Friction Disc
9. Clutch Plate
10. Spring Washer
11. Lock Washer
12. Locknut
13. Shroud
14. [A] Followup Arm
15. [A] Followup - Roll
16. Cable Drum
17. Torque Wrench
18. Adapter Gear
19. Drive Pin - Aileron
20. Adapter Block
21. Adapter Pin
22. Torque Adapter
23. Cable Drum Assembly
24. Hole - Drive Pin

Note

A small hole (24) must be drilled in face of adapter block (20) when checking the aileron slip clutch setting. The hole is located 60° off the vertical centerline of the adapter block. This hole allows clearance for the autopilot followup drive pin.

[A] Aircraft 23-003 thru 23-099 when modified by SK23/24-217.

Figure 2-5. Autopilot Capstan Slip Clutch Adjustment

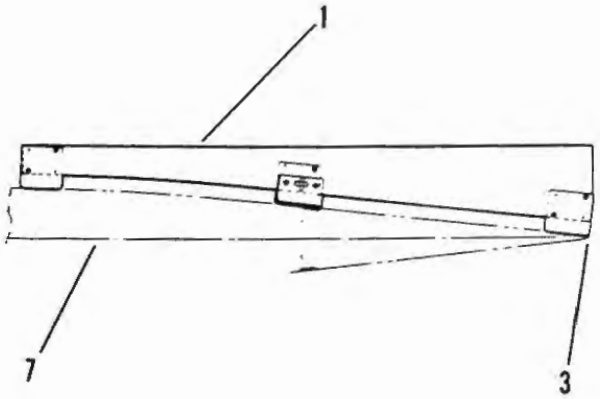

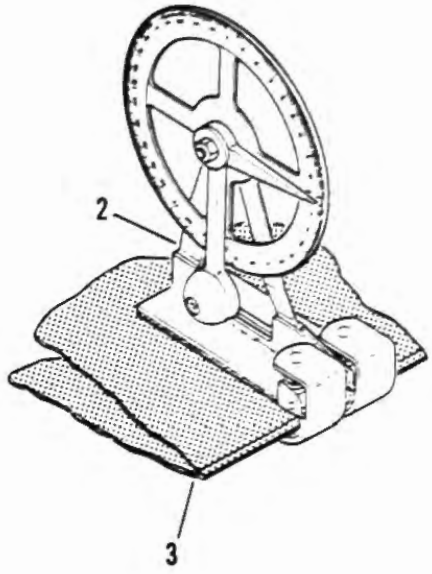

1. Contour Plate, P/N 2471003-1
2. Clinometer, P/N 2471004-1
3. Aileron Trailing Edge
4. Knob
5. Plate
6. Station 157.48
7. Wing (Ref)

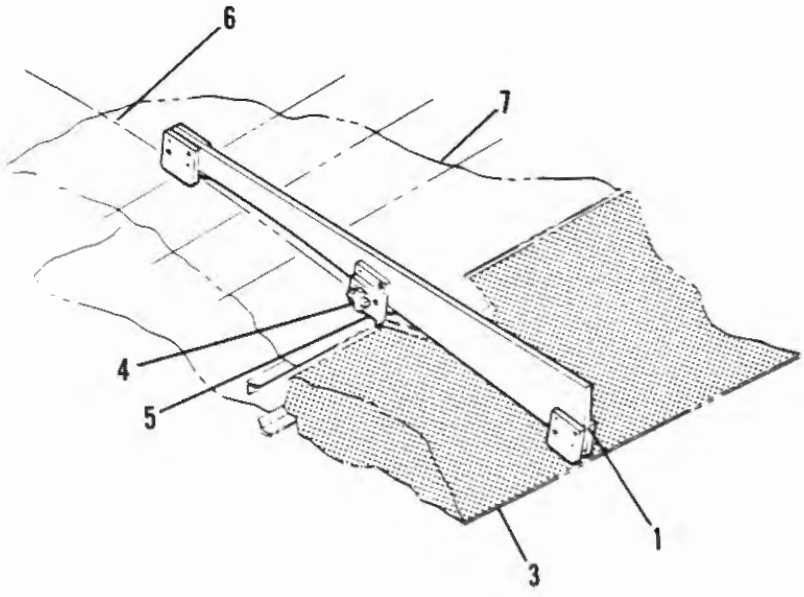

Figure 2-5A. Aileron Control System Rigging

b. Capstan Slip Clutch Adjustment.

1. [A] Disconnect electrical plug from roll followup (15).
2. Remove shroud (13) from mounting plate (1), [A] with roll followup attached.

Note

Use care not to damage end of followup arm when springing arm apart to remove from cable drum pin.

3. Disconnect one end of servo cable and unwrap cable from cable drum (16).

Note

- Use care not to lose cable retainer (7) when removing servo cable from cable drum.
- Mounting plate, spring, wiper disc, and locking ring are not removed from aircraft.

4. Slide cable drum assembly (23) aft and remove from aircraft.
5. Place adapter block (20) in vise. Position cable drum assembly (23) in adapter block and secure with adapter pin (21).
6. Attach a torque wrench to adapter gear (18) and place adapter gear into cable drum assembly (23).
7. After initial clutch breaking force occurs, move torque wrench to the left and right through the entire clutch travel range.
8. Clutch slippage should occur at 150 (±15) inch-pounds.
9. Adjust clutch by loosening or tightening locknut (12). Tighten locknut to increase clutch torque; loosen locknut to decrease clutch torque.

Note

If the correct clutch torque settings cannot be obtained, disassemble the drum assembly, clean and relubricate the internal surface (both sides) of drum with a light application of Dow Corning No. 33 grease. Reassemble drum assembly and adjust slip clutch by repeating steps 5. thru 9.

10. Slide cable drum assembly (23) on mounting plate (1).
11. Install cable retainer (7) on servo cable ball.
12. Rotate cable drum assembly so that cable ball hole points down.
13. Wrap loose end of servo cable around top of cable drum and insert cable ball into cable ball hole. Continue to wrap cable around drum and across top.
14. Install shroud (13), [A] with roll followup attached, on mounting plate (1).
15. Spread end of followup arm and attach arm to cable drum pin.
16. Attach loose end of servo cable previously removed.
17. Adjust servo cable tension to 25 (±5) pounds. (Refer to AILERON CONTROL SYSTEM RIGGING, this section.)
18. Reinstall roll servo. Attach electrical plugs to servo and [A] followup.
19. Install floorboards and carpet.

REPLACEMENT AND ADJUSTMENT OF AUTOPILOT ROLL FOLLOWUP. (See figure 2-6.)

a. Assure the aileron control system is properly rigged and insert rigging pin in copilot's control wheel. This will hold the aileron controls in neutral during followup installation and adjustment.

b. Gain access to the autopilot roll followup. Disconnect followup electrical plug and remove attaching parts and followup from the aircraft.

Note

- [B] Prior to installing new followup, align detent dot on followup shaft with detent dot on followup housing.
- [A] Prior to installing new followup, align detent dot in followup shaft and detent dot on followup housing 180° apart.

c. Install followup and secure with attaching parts. Connect electrical plug to followup and install followup arm on followup shaft.

d. Remove the autopilot computer/amplifier from its rack and remove the perforated lid from the computer/amplifier.

e. Fabricate a jumper wire approximately 2 feet long of insulated AWG 24 wire by stripping the insulation from both ends.

f. Remove the roll calibration module from the computer/amplifier, locate pin 11, and secure one end of the jumper wire fabricated in step e to pin 11.

g. Install the roll calibration module in computer/amplifier and install computer/amplifier in its rack.

h. Remove the computer/amplifier front cover and set the W. O. -SHORT switch to SHORT.

Note

Followup output is an AC signal and is measured in millivolts. Adjust sensitivity of voltmeter to read millivolts.

i. [B] Connect a Simpson voltmeter or equivalent to the jumper wire and aircraft ground. Set the Battery switch to ON, Inverter switch to MAIN, and the Autopilot Master switch to on. Loosen followup arm on followup shaft and adjust followup shaft until voltmeter indicates zero voltage. With zero voltage indicated, the followup will be nulled. Tighten followup

[A] Aircraft 23-003 thru 23-099 Modified by SK23-217.
[B] Aircraft 23-003 thru 23-099 Except Aircraft Modified by SK23-217.

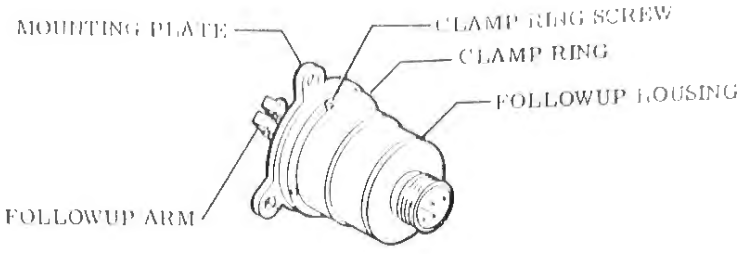

AUTOPILOT FOLLOWUP

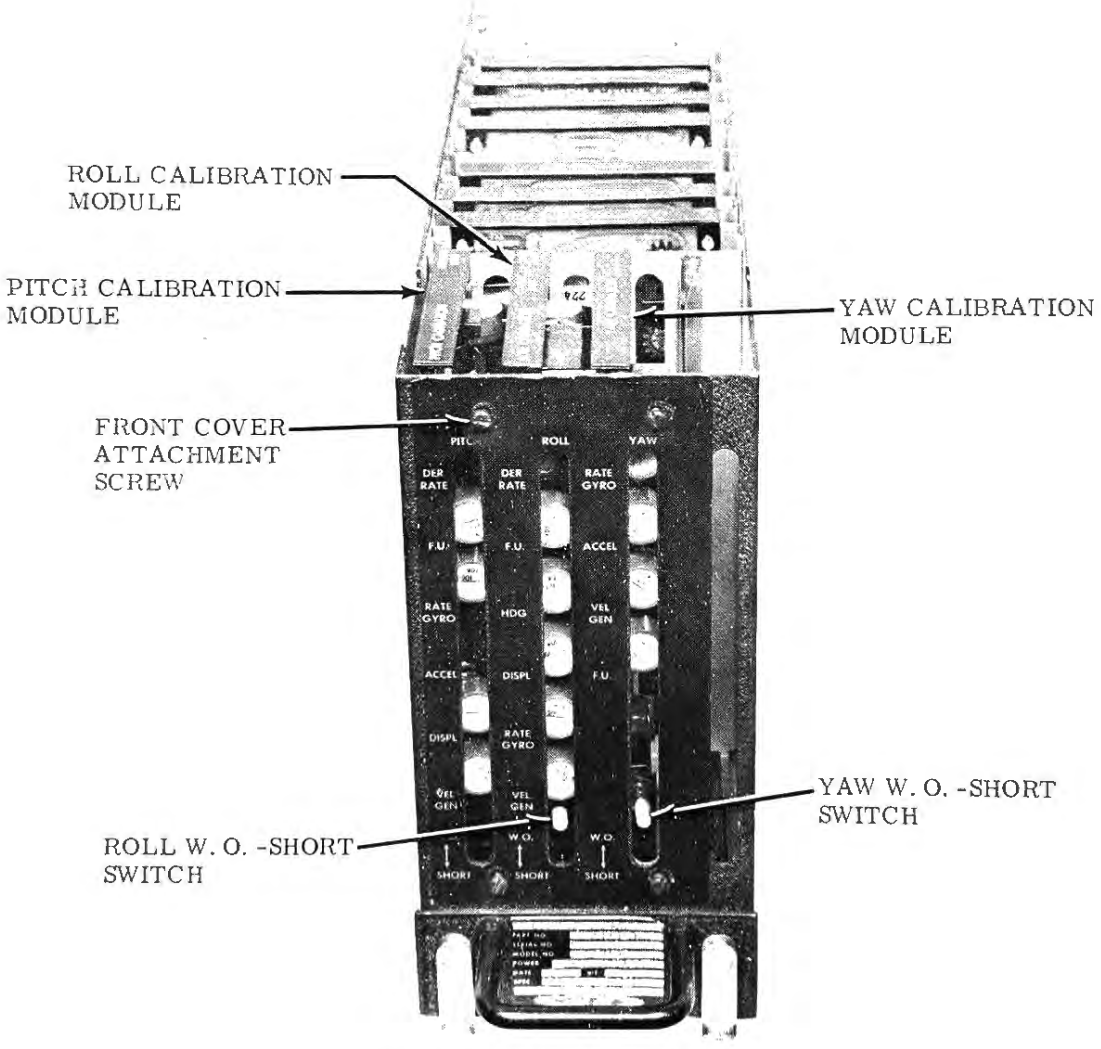

AUTOPILOT COMPUTER/AMPLIFIER
(SHOWN WITH FRONT COVER AND
PERFORATED LID REMOVED)

Figure 2-6. Followup Calibration and Adjustment

arm on followup shaft. Remove rigging pin and engage autopilot by depressing the ENGAGE button on the autopilot flight controller.

j. [A] Connect a Simpson voltmeter or equivalent to the jumper wire and aircraft ground. Set the Battery switch to ON, Inverter switch to MAIN, and the Autopilot Master switch to on. Remove safety wire from followup housing clamp ring screws. Loosen clamp ring screws sufficiently to allow the followup housing to be rotated by hand. DO NOT USE PLIERS OR WRENCH to turn followup housing. Adjust followup housing until voltmeter indicates zero voltage. With zero voltage indicated, the followup will be nulled. Tighten clamp ring screws. Remove rigging pins and engage autopilot by depressing the ENGAGE button on the autopilot flight controller.

k. With the autopilot engaged, turn control wheel for a left wing down and then release. If the control wheel goes hard over, the followup is turned 180° and step l [B] or step m [A] must be performed. If the control wheel returns to center, safety wire clamp ring screws and proceed with step n.

l. [B] Disengage autopilot by depressing the nose wheel steering button on the control wheel. Insert rigging pin into copilot's control wheel. Loosen followup arm from followup shaft and rotate shaft 180°. Null followup by adjusting shaft until voltmeter indicates zero voltage. Tighten followup arm on followup shaft. Remove rigging pin.

m. [A] Disengage autopilot by depressing nose wheel steering button on the control wheel. Insert rigging pin into copilot's control wheel. Loosen clamp ring screws securing followup housing to followup mounting plate. Rotate followup housing 180° by hand. DO NOT USE PLIERS OR WRENCH to turn followup housing. Null followup by adjusting followup housing until voltmeter indicates zero voltage. Tighten and safety wire clamp ring screws. Remove rigging pin.

n. Set the W. O. -SHORT switch on the computer/amplifier to W. O. and the Battery, Inverter, and Autopilot Master switches to OFF.

o. Remove the computer/amplifier from its rack and remove the roll calibration module from the computer/amplifier and disconnect the jumper wire from pin 11.

p. Install roll calibration module in computer/amplifier and install perforated lid and front cover on the computer/amplifier.

q. Install the computer/amplifier in its rack.

r. Install and secure all previously removed equipment.

AILERON TRIM TAB SYSTEM. (See figure 2-7.)

a. Aileron Trim Tab. The aileron trim tab is attached to the left aileron by a continuous-type hinge. The tab is powered by a rotary-type electrical actuator located in the aileron leading edge. The roll trim switch on the control wheel is used to control the trim tab actuator. The roll trim indicator indicates trim tab position. Trim tab travel is 8° (+1°, -0°) both up and down.

b. Aileron Balance Tabs. Aileron balance tabs are installed on both ailerons to decrease control column force. Each balance tab consists of a movable tab hinged to the aileron trailing edge and an adjustable push-pull rod connecting it to the fixed wing surface. As the ailerons are moved, the balance tabs move proportionately in the opposite direction. With the ailerons fully up, the tabs shall be 15° (±2°) down relative to the ailerons. With the ailerons fully down, the tabs shall be 15° (+1/2°, -3 1/2°) up relative to the ailerons. Assure that the ailerons are properly rigged prior to adjusting tab travel.

AILERON TRIM TAB ACTUATOR. (See figure 2-7.) The aileron trim tab actuator is a rotary-type unit mounted in the leading edge of the left aileron. The unit is a 26-volt DC split field, series wound, reversible intermittent duty motor with a magnetic brake. The motor also includes a radio noise filter and externally adjustable limit switches. An integral potentiometer supplies an indication of tab position to the roll trim indicator on the cockpit center pedestal. The roll trim indicator is adjusted at the Position Indicator Calibration Assembly (Section VI).

[A] Aircraft 23-003 thru 23-099 modified by SK23-217.
[B] Aircraft 23-003 thru 23-099 not modified by SK23-217.

AILERON TRIM TAB SYSTEM - TROUBLE SHOOTING.

TROUBLE	PROBABLE CAUSE	CORRECTION
INCORRECT TAB TRAVEL.	Actuator incorrectly adjusted.	Adjust limit switches on actuator to obtain proper travel.
TRIM TAB DOES NOT ACTUATE.	No power.	Check ROLL TRIM TAB circuit breaker.
	Defective ROLL TRIM switch or wiring.	Check Wiring Diagram - Trim System for continuity.
	Defective tab actuator.	Replace actuator.
TRIM TAB OPERATION ROUGH AND ERRATIC.	Structural interference.	Check all adjacent surfaces to assure tab is free from interference.
	Defective tab actuator.	Replace actuator.

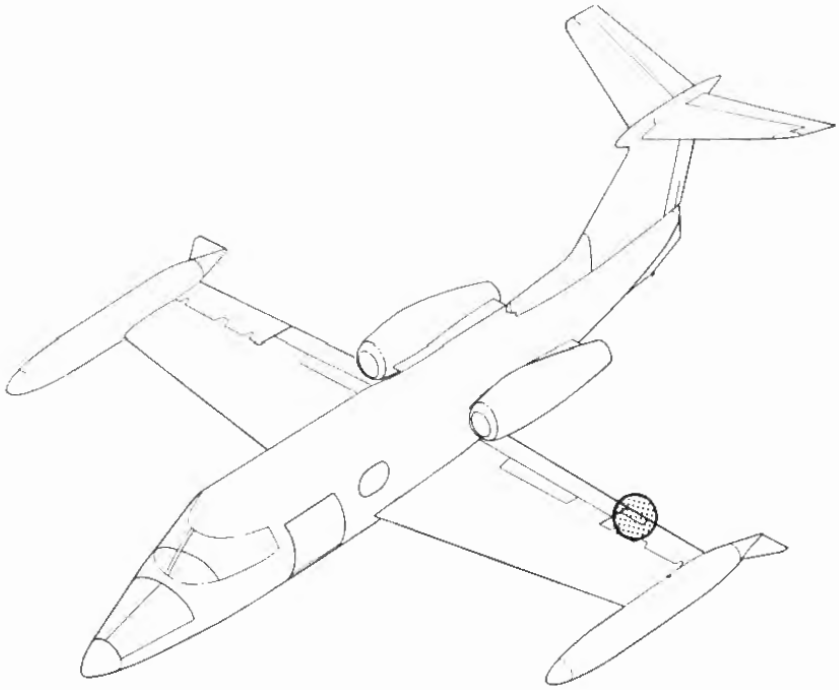

1. Aileron
2. Aileron Trim Tab
3. Bracket
4. Push Pull Tube
5. Spacer
6. Access Cover
7. Actuator
8. Aileron Balance Tab
9. Potentiometer

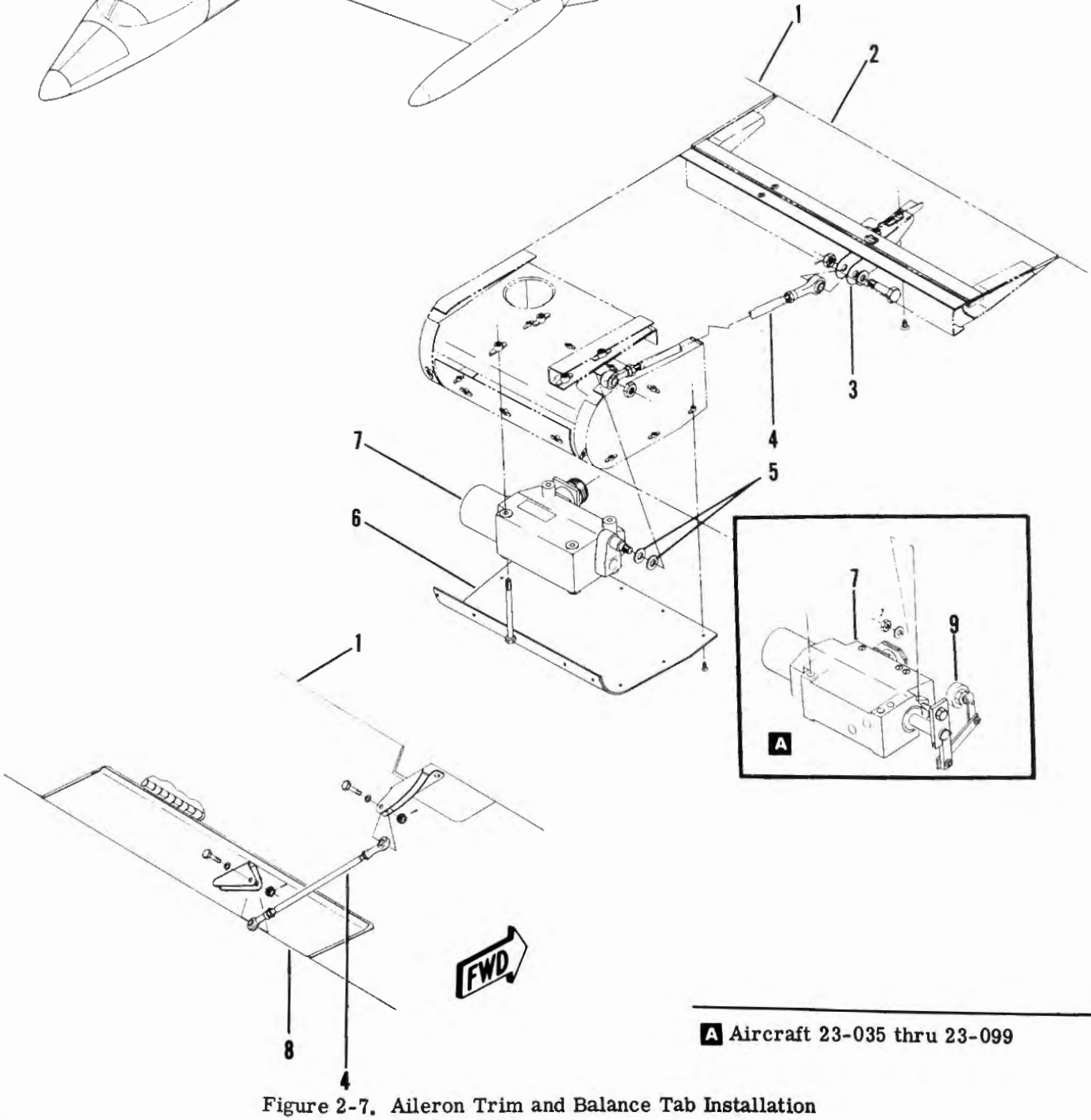

A Aircraft 23-035 thru 23-099

Figure 2-7. Aileron Trim and Balance Tab Installation

REMOVAL AND INSTALLATION OF AILERON TRIM TAB COMPONENTS. Removal and installation of aileron trim tab components should be performed as shown in the exploded view sequence in figure 2-7.

AILERON SPOILER TAB REPLACEMENT. (See figure 2-8.)

a. Thoroughly clean all surfaces to be bonded using a clean cloth dampened with methyl ethyl ketone or other suitable cleaning solvent. When all surface contamination has been removed and while surface is still wet, wipe dry with a clean cloth.

b. Mix EC-2216 epoxy adhesive, manufactured by Minnesota Mining & Manufacturing Company, as follows:

1. Add 100 parts by weight of EC-2216B to 140 parts by weight of EC-2216A.
2. Mix until components blend to a uniform medium gray color.

Note

The pot life of mixed adhesive is approximately 2 hours.

c. Remove existing adhesive and primer from bond area and spoiler tab by light sanding with No. 400 grit sandpaper.

d. Apply the mixed adhesive to the cleaned surfaces with a spatula.

e. Locate spoiler tabs as shown in figure 2-8 and press to aileron control surface to effect the bond.

f. A small fillet of adhesive is permitted around the edges of the spoiler tabs.

Note

Apply sufficient pressure during the cure of EC-2216 to keep parts aligned and to overcome distortion and thermal expansion.

g. Allow bond to cure at room temperature for 24 hours. Full cure is achieved in 3 to 7 days at room temperature. Cure may be accelerated by heating for 2 hours at 150° F or 45 minutes at 200° F.

h. After bond is fully cured, touch up bare metal areas with primer and required surface finish.

WING FLAP SYSTEM. (See figure 2-9.) The flap system is mechanically controlled and hydraulically operated. The control lever, which is mounted on the cockpit center pedestal, is connected by **A** cable or **B** electrically to a control valve. This control valve directs pressure flow to the hydraulic actuator(s) which operates the flaps through a series of sectors, bellcranks, and push-pull tubes. On **C** and **E**, dual actuators are incorporated in the flap system. The flap control valve directs hydraulic fluid to the actuator adjacent to each wing flap. Movement of the actuators rotate sectors to extend or retract the flaps. Interconnecting control cables are attached to a sector adjacent to each flap to assure synchronized flap travel. Movement of the actuators rotate sectors to extend or retract the flaps. Interconnecting control cables are attached to a sector adjacent to each flap to assure synchronized flap travel.

Note

The hydraulic portion of the flap system is discussed in Section III of this Service Manual.

FLAP ACTUATOR - REMOVAL **D**. (See figure 2-9.)

a. Depressurize the hydraulic system. (Refer to HYDRAULIC SYSTEM, Section III.)

b. Lower LH and RH main gear inboard doors. (Refer to Removal of Inboard Gear Door, Section III.)

c. Remove attaching parts and access panels immediately forward of the tailcone access door.

d. Disconnect hydraulic hoses from flap actuator. Plug and cap all exposed hydraulic fittings.

e. Remove attaching parts securing actuator rod end (53) to bellcrank.

f. Remove attaching parts securing upper bracket (2) to lower bracket (3) and remove bracket (2) from aircraft.

g. Lift actuator (6) until lower trunnion pin is free of lower bracket (3). Remove actuator (6) from the aircraft.

FLAP ACTUATOR - DISASSEMBLY **D**. (See figure 2-10.)

a. Cut lockwire and remove key lock (2) from actuator rod end. Loosen locknut (3) and remove rod end (1) and locknut from piston (10).

b. Cut lockwire and loosen spanner nut (9). Remove end gland (7) from body (13). Remove piston (10) from body (13).

c. Remove backup rings (11 and 5), O-rings (6 and 12), shim (8), and felt wiper (4) from piston (10) and end gland (7).

FLAP ACTUATOR- INSPECTION **D**.

a. Perform a visual inspection of flap actuator detail parts including rod end with a 10X magnification for evidence of cracks, pitting and corrosion.

b. Check parts for distortion and irregular wear tendencies.

c. Perform a dye penetrant or zyglo inspection of the flap actuator cylinder barrel for longitudinal cracks along external and internal surfaces.

d. Replace actuator if cracks are found.

e. Prior to reassembly, refinish external surface of flap actuator cylinder barrel with Epoxy Primer P/N E42AP-10 and Catalyst Reducer P/N V66-KP46, manufactured by the Sherwin Williams Company or equivalent.

A Aircraft 23-003 thru 23-029.
B Aircraft 23-030 thru 23-099.
C Aircraft 23-090 thru 23-099.
D Aircraft 23-003 thru 23-089 Not Incorporating AMK73-5.
E Aircraft 23-090 thru 23-099 and Aircraft Incorporating AMK73-5.

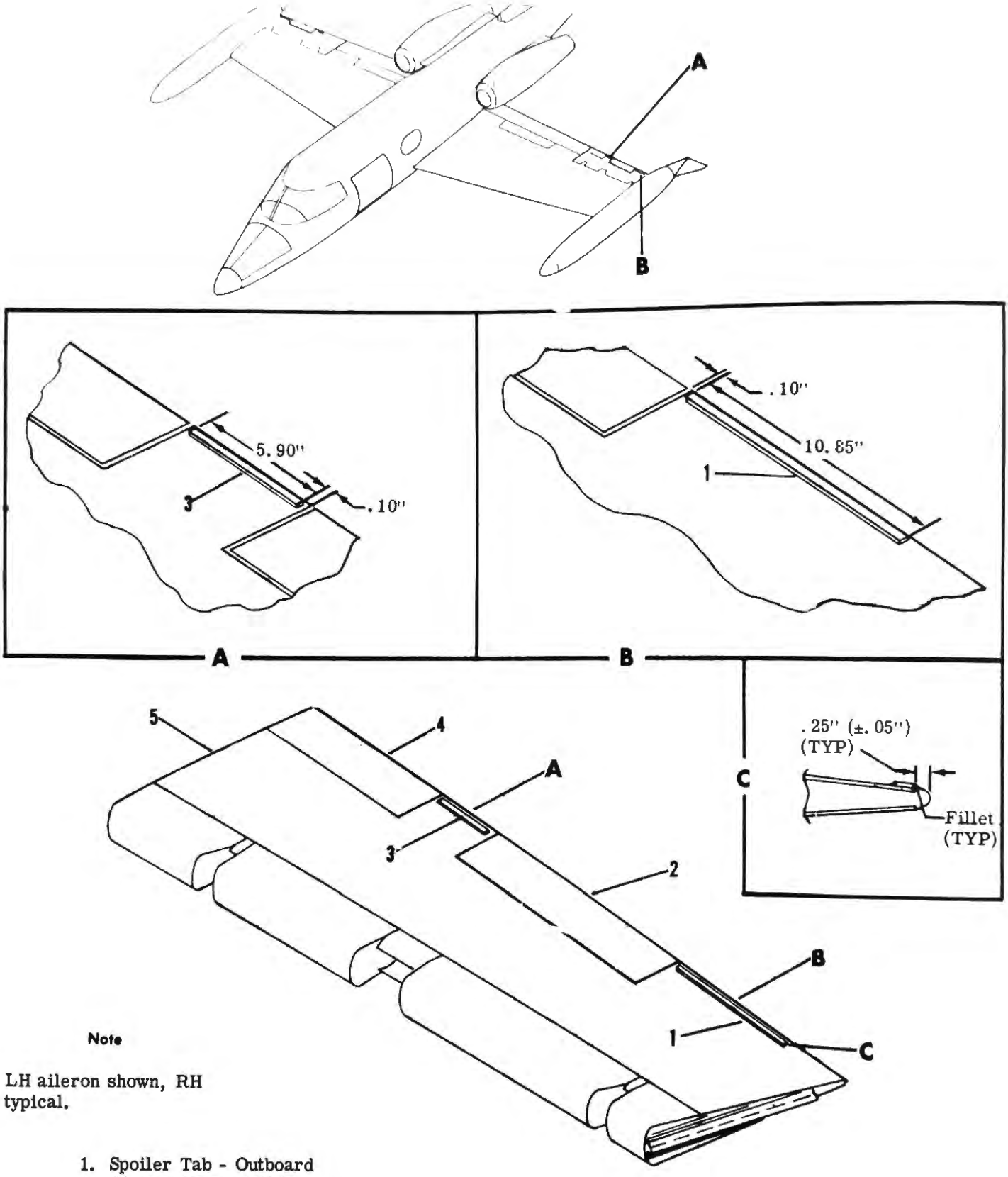

Note

LH aileron shown, RH typical.

1. Spoiler Tab - Outboard
2. Aileron Balance Tab
3. Spoiler Tab - Inboard
4. Aileron Trim Tab
5. Aileron Assembly

Figure 2-8. Aileron Spoiler Tab Installation

FLAP ACTUATOR - REASSEMBLY [D]. (See figure 2-10.)

a. Clean actuator parts with Stoddard solvent or equivalent. Dry parts with clean dry compressed air.

b. Inspect parts for nicks, scratches, or excessive wear. Replace defective parts.

c. Buff out minor defects using an oil stone and polish with crocus cloth.

d. Immerse O-rings and backup rings in MIL-H-5606 hydraulic fluid prior to installation.

e. Apply a thin coat of MIL-H-5606 hydraulic fluid to piston head and assemble O-ring (12) and backup rings (11) on piston head (10).

f. Assemble O-ring (6), backup ring (5), and felt wiper (4) in end gland (7).

g. Install piston (10) in body (13). Install shim (8) into end gland (7) and screw end gland on body (13) as far as possible. Install spanner nut and tighten against end gland (7). Lockwire spanner nut.

[D] Aircraft 23-003 thru 23-089 Not Incorporating AMK73-5.

Learjet Temporary Service Manual Revision

SERVICE MANUAL AFFECTED: Gates Learjet Model 23 Service Manual.

FILING INSTRUCTIONS: File adjacent to page 2-16A.

REASON: To add flap removal and installation procedures.

INSTRUCTIONS: Add text and figure as follows:

FLAP REMOVAL. (See figure 2-9 - Model 23)

a. Extend flaps and spoilers.

b. Remove access cover from underside of wing and insert rigging pin in flap sector.

c. Disconnect flap bonding jumper from wing aft spar.

d. Disconnect flap push-pull tube from sector.

e. Remove bolts securing flap to flap nose track releasing rollers, spacers and washers from flap nose track.

f. Check all track rollers for scoring and excessive wear. Replace as necessary.

g. Check all flap tracks for rust.

h. Check push-pull tube end bearings. Replace as necessary.

i. Check bearings in flap tracks. Replace as necessary.

j. If flap is to be replaced with a new flap, proceed as follows:

1. Remove flap tracks from existing flap.
2. Remove push-pull tube and disconnect bonding jumper from existing flap.

FLAP INSTALLATION.

Note

Lubricate flap track rollers in accordance with Section I. Assure that flap track assemblies and flap nose tracks are clean.

a. Installation of Existing Flap. (See figure 9 - Model 23)

1. Align flap and flap tracks with flap track rollers and push-pull tube with push-pull tube access hole in wing rear spar.
2. Insert flap tracks on rollers and push-pull tube into access hole assuring flap tracks align on forward rollers and flap nose track is between flap nose hinge brackets.
3. With flap nose tracks on flap nose hinge brackets, install nose flap track rollers, spacers, and washers using attaching parts.
4. Connect flap bonding jumper at rear wing spar and push-pull tube to flap sector.
5. Rig flaps. (Refer to FLAP SYSTEM RIGGING, this section.)

b. Installation of Replacement Flap. (See figure 2-9A - Model 23)

1. Prior to installation of flap check all components for excessive wear.

Note

Attaching hardware not supplied with a new flap, should be removed from the old flap and used on the new flap.

2. Clean flap tracks and flap nose tracks.
3. Lubricate flap track rollers with MIL-G-81322 grease using zerk gun with Alemite 90° rubber tip adapter (P/N 327265).
4. Install flap tracks on flaps using attaching parts removed from old flap.
5. Connect bonding jumper and push-pull tube to flap.
6. Align flap and flap tracks with flap track rollers and push-pull tube with push-pull tube access hole in wing rear spar.
7. Insert flap tracks on rollers and push-pull tube into access hole assuring flap tracks align on forward rollers and flap nose track is between flap nose hinge brackets.
8. Raise flap by hand to the retracted position.

Note

Flap cannot be raised to the full retract position until after the flap fairing has been trimmed.

(Over)

9. Measure and mark flap fairing so that it may be trimmed to the gap shown in the figure.
10. Lower flap and trim along the trim line previously established.
11. Raise flap by hand to the full retract position and check for proper gap between fuselage fairing and flap fairing. Trim as necessary to obtain uniform gap.
12. With flap nose tracks on flap nose hinge brackets, install nose flap track rollers, spacers, and washers using attaching parts.
13. Connect flap bonding jumper to rear wing spar.
14. Attach flap push-pull tube to sector by inserting bolt from the bottom side and secure with nut, washer and cotter pin.
15. Rig flaps (Refer to FLAP SYSTEM RIGGING, this Section).

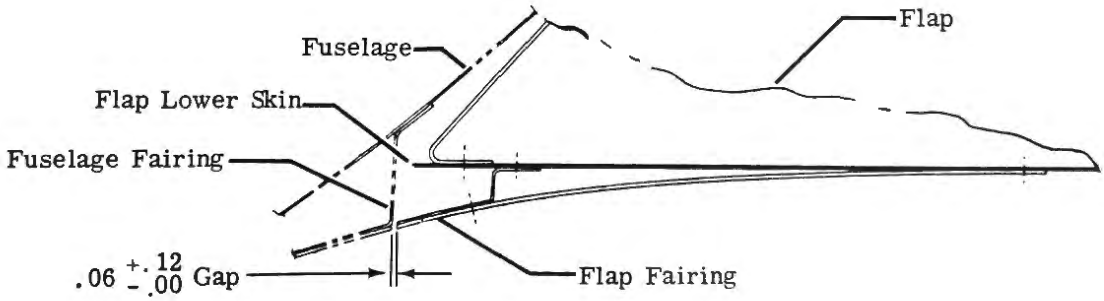

Figure 2-9A. Flap Installation

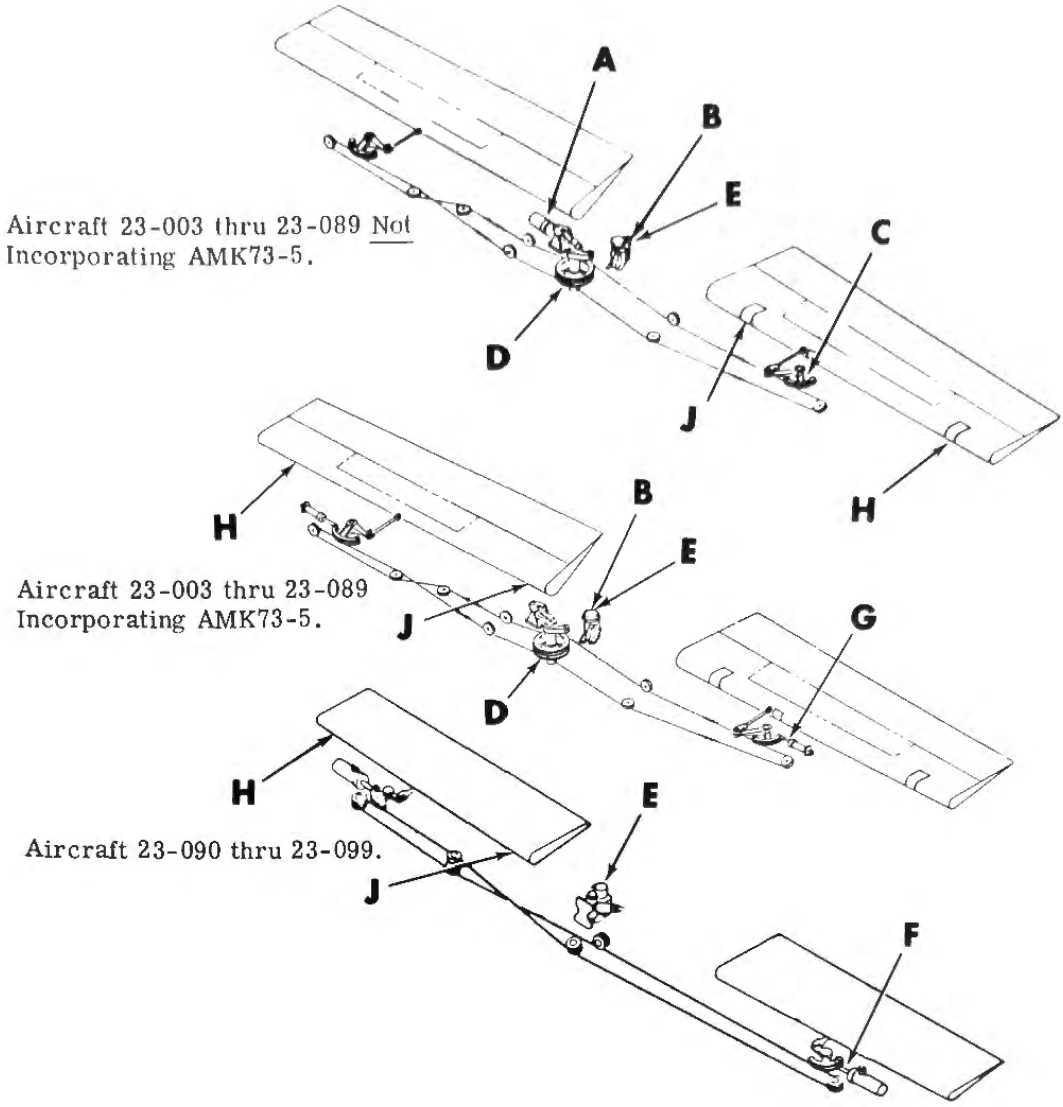

1. Hose - Flaps Up
2. Bracket - Upper
3. Bracket - Lower
4. Bracket
5. Hose - Flaps Down
6. Hydraulic Flap Actuator
7. Hose
8. Hose
9. Control Arm
10. Linkage - Flap Control
11. Followup Arm
12. Flap Control Valve
13. Solenoid Flap Control Valve
14. Bracket
15. Flap Pushrod
16. Bearing
17. Sector-LH
18. Rigging Pin Hole
19. Potentiometer - Flap Position
20. Link - Followup
21. Bellcrank
22. Shaft
23. Housings - Upper
24. Bushing
25. Spacer
26. Laminated Washer
27. Cable Guard
28. Pulley
29. Housing - Lower
30. Cable Guard
31. Retainer
32. Clamp
33. Collar
34. Arm
35. Microswitch
36. Track - Nose Roller
37. Support - Inner
38. Track - Outboard
39. Cap - Aft
40. Cap - Forward
41. Roller
42. Cap - Aft
43. Support - Inner
44. Track - Inboard
45. Support - Outer
46. Track - Nose Roller
47. Rollers
48. Cap - Forward
49. Flap Bracket - Outboard
50. Roller - Flap Nose
51. Flap Bracket - Inboard
52. Roller - Flap Nose
53. Rod End

Figure 2-9. Flap System Installation (Sheet 1 of 4)

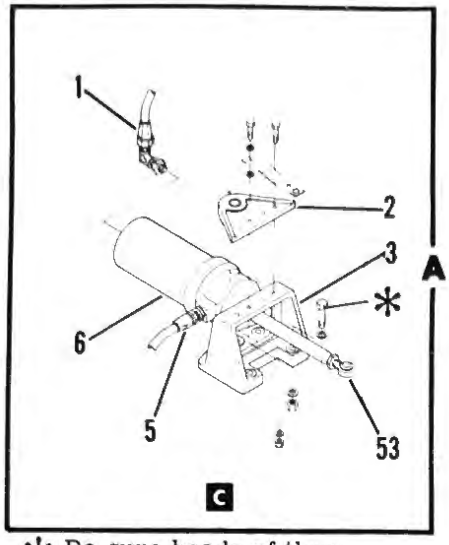

* Be sure heads of these bolts are installed as shown.

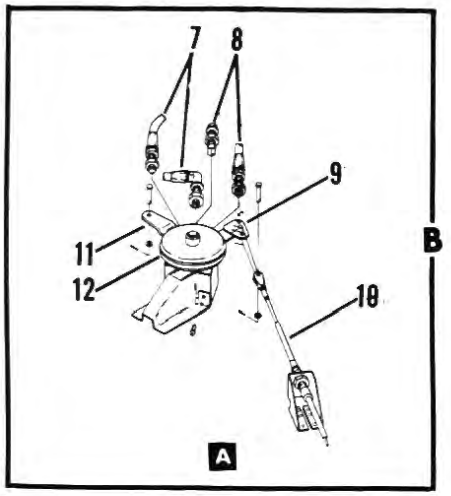

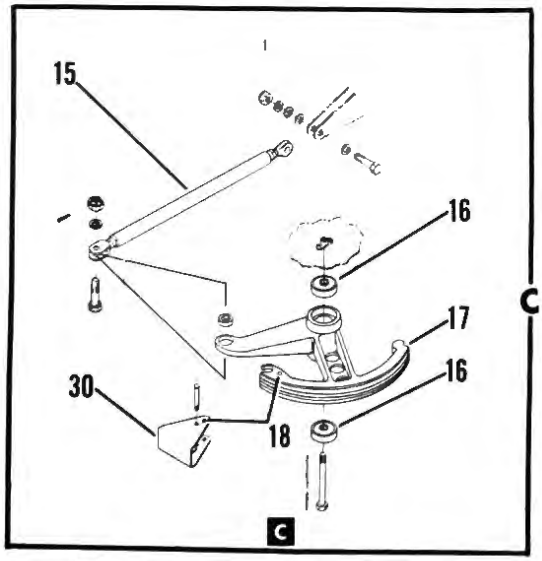

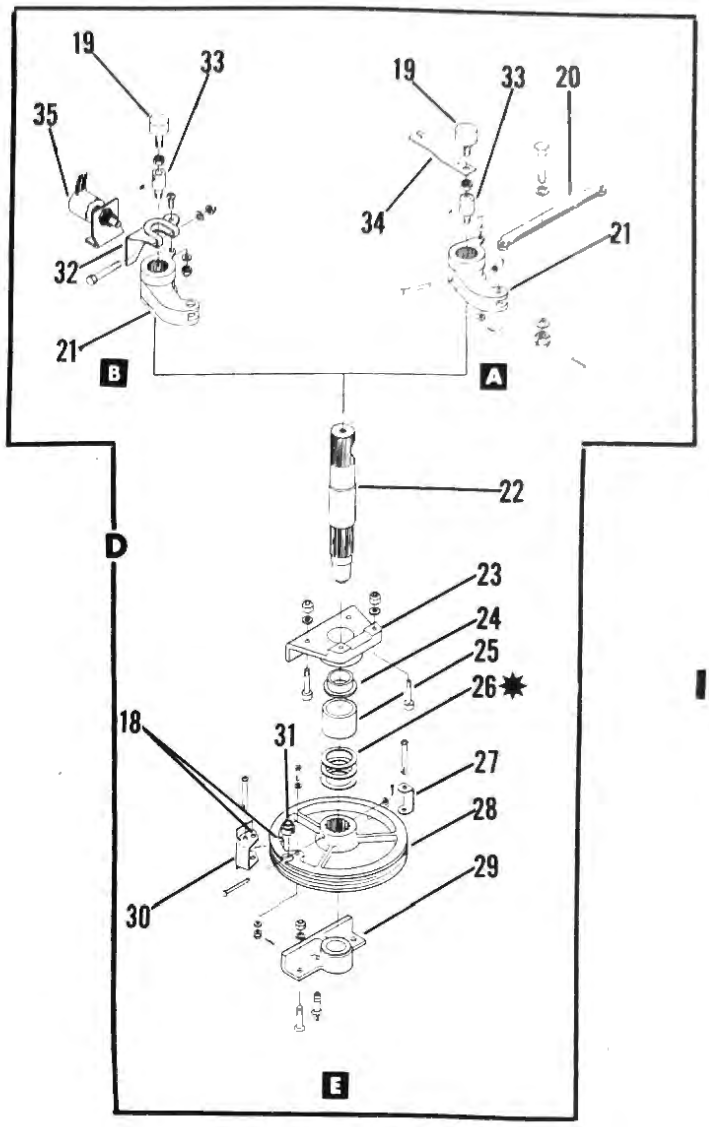

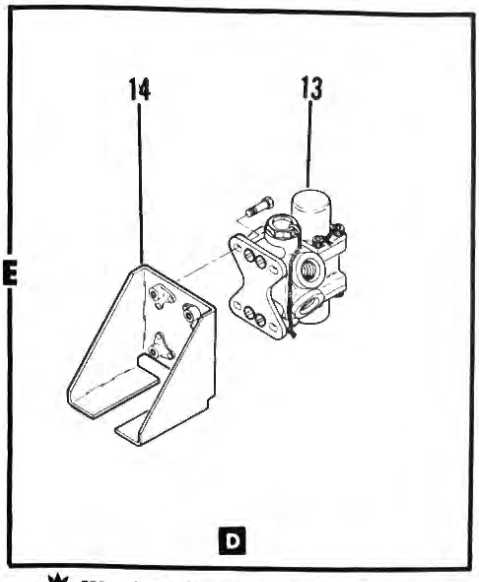

A Aircraft 23-003 thru 23-029.
B Aircraft 23-030 thru 23-089.
C Aircraft 23-003 thru 23-089 Not Incorporating AMK73-5.
D Aircraft 23-030 thru 23-099.
E Aircraft 23-003 thru 23-089.

* Washer thickness to allow .010 (+.015/-.005) vertical movement of pulley.

Figure 2-9. Flap System Installation (Sheet 2 of 4)

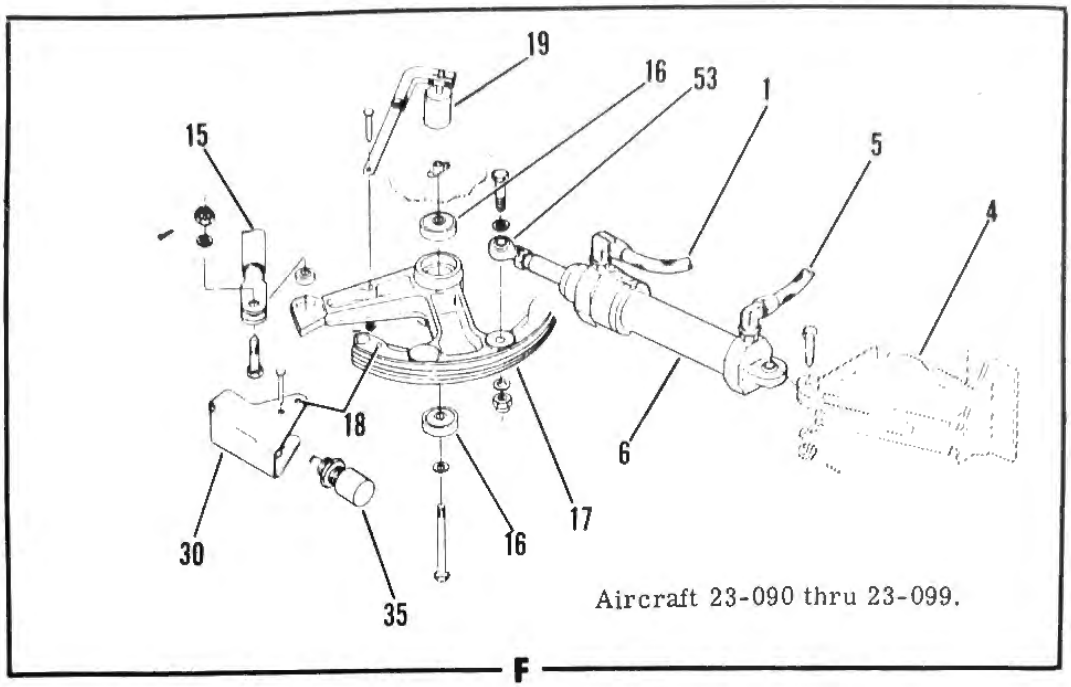

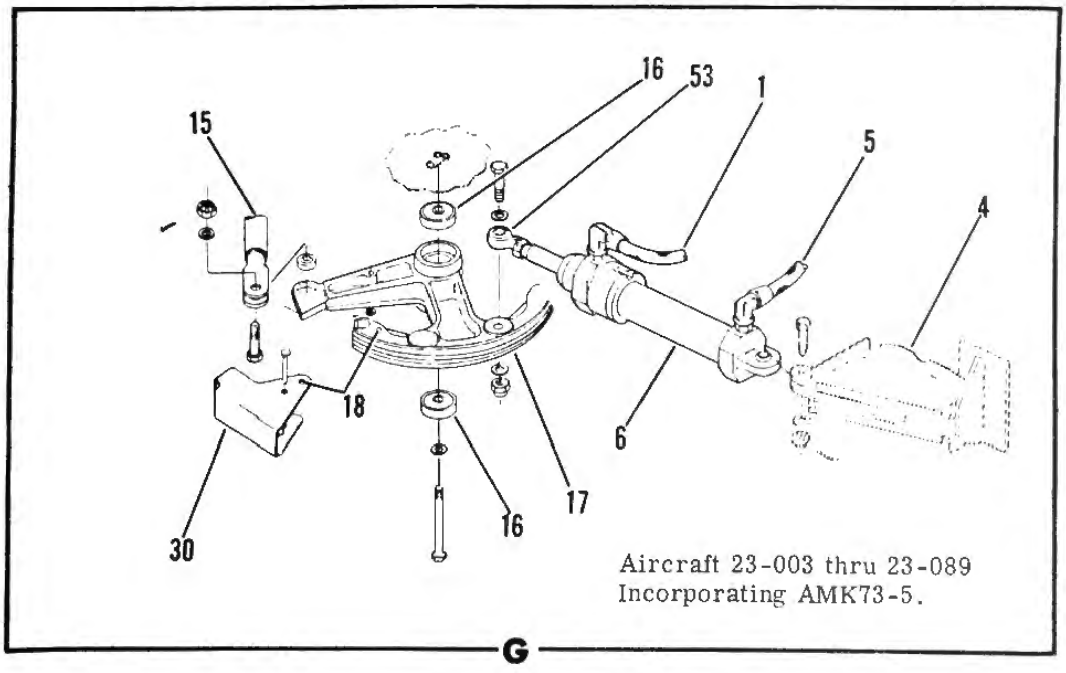

Figure 2-9. Flap System Installation (Sheet 3 of 4)

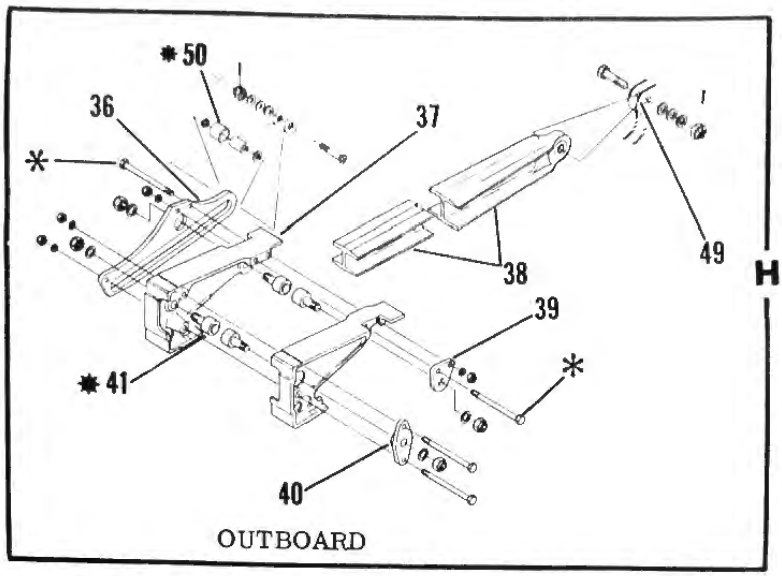

H

I

CAUTION

✳Be sure heads of these bolts are installed as shown. If heads of bolts are not on side shown, bolts will not clear flaps when in the retracted position.

✸DO NOT lubricate the Flap Nose Rollers

✸Lubricate Flap Track Rollers (Refer to Section I)

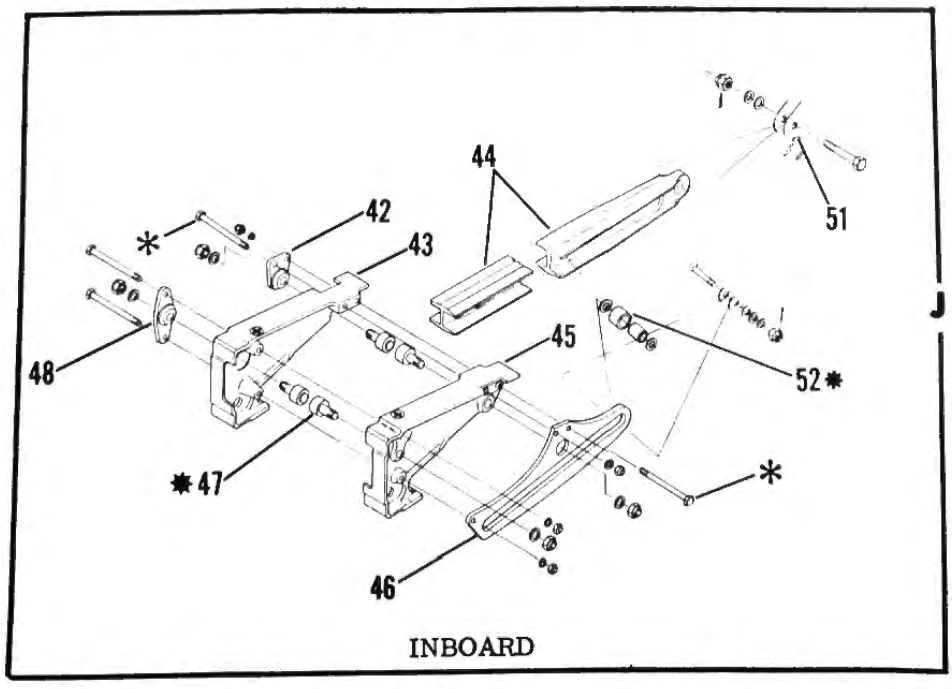

J

I

Figure 2-9. Flap System Installation (Sheet 4 of 4)

1. Rod End
2. Key Lock
3. Locknut
4. Felt Wiper
5. Backup Ring
6. O-Ring
7. End Gland
8. Shim Washer
9. Spanner Nut
10. Piston
11. Backup Ring
12. O-Ring
13. Body
14. Rod - Piston
15. Retainer Ring
16. Washer
17. Scraper Ring
18. Backup Ring
19. O-Ring
20. Cap
21. Backup Ring
22. O-Ring
23. Laminated Shim
24. Backup Ring
25. O-Ring
26. Backup Ring
27. O-Ring
28. Head - Piston
29. Nut
30. Cotter Pin

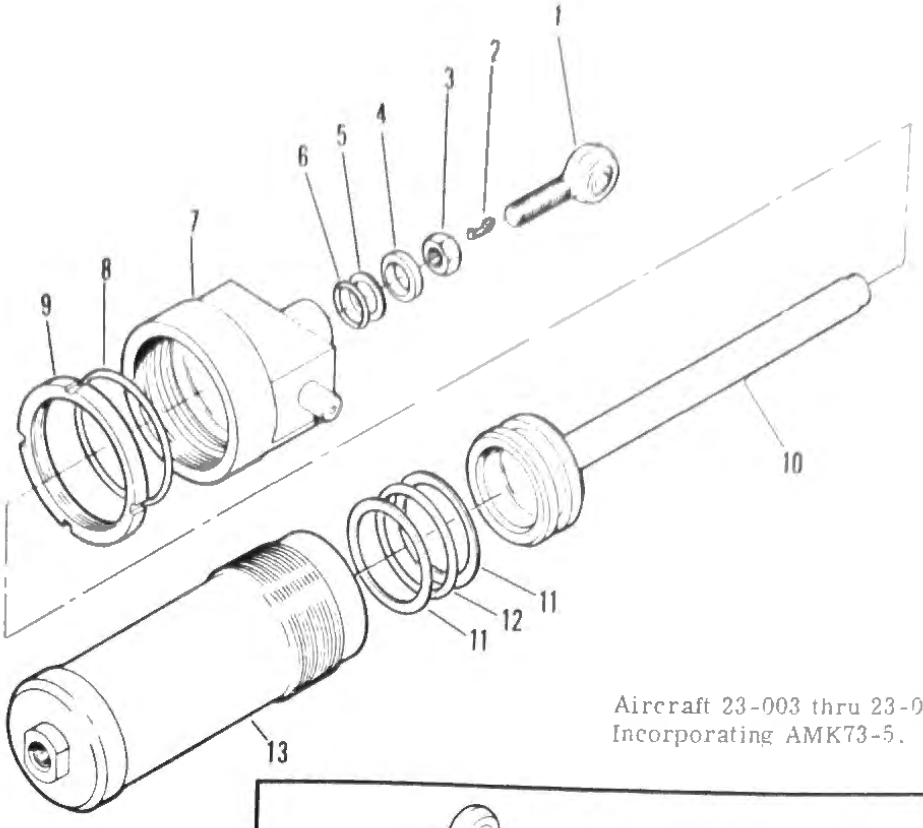

Aircraft 23-003 thru 23-089 Not Incorporating AMK73-5.

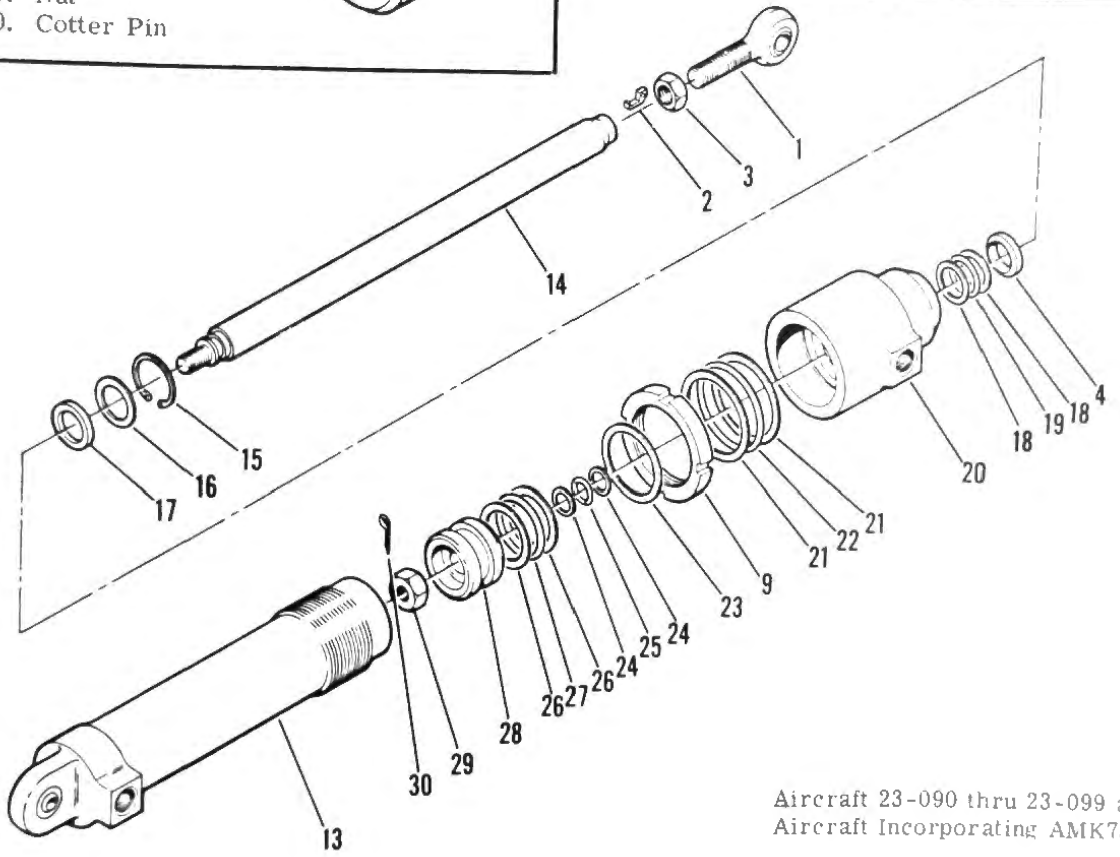

Aircraft 23-090 thru 23-099 and Aircraft Incorporating AMK73-5.

Figure 2-10. Flap Actuator Assembly

h. Assemble key lock (2), locknut (3), and rod end (1) on piston rod (10).
i. Connect the actuator to a hydraulic test bench. Pressure check actuator, both extend and retract positions, to 2250 psi for 3 minutes.
j. With the actuator fully retracted, adjust for 2.900 (±.010) inches between centerlines of extend port and rod end (1). Lockwire key lock (2).

FLAP ACTUATOR - INSTALLATION **A**. (See figure 2-9.)
a. Install actuator in aircraft by inserting trunnion pin on actuator into bearing of lower bracket. Assure that extend port is facing forward.
b. Position upper bracket (2) on actuator (6) and lower bracket (3) and secure with attaching parts.
c. Attach rod end (53) to bellcrank (21) and secure with attaching parts.
d. Reconnect hydraulic lines.
e. Reconnect main gear inboard doors. (Refer to Installation of Inboard Gear Door, Section III.)
f. Pressurize the hydraulic system and cycle the flaps, checking for hydraulic leaks and proper operation.
g. Reinstall access panels.

FLAP ACTUATOR - REMOVAL **B**. (See figure 2-9.)

Note

The following procedure is applicable for both flap actuators.

a. Depressurize the hydraulic system. (Refer to HYDRAULIC SYSTEM, Section III.)
b. Remove access panel (23, figure 1-3).
c. Disconnect hydraulic lines. Cap and plug all exposed hydraulic fittings.
d. Remove attaching parts securing actuator (6) to bracket (4) and sector (17). Remove actuator (6) from aircraft.

FLAP ACTUATOR - DISASSEMBLY **B**. (See figure 2-10.)
a. Cut lockwire and remove key lock (2). Loosen locknut (3) and remove rod end (1) and locknut from piston rod (14).
b. Cut lockwire and loosen spanner nut (9). Remove cap (20) from body (13). Remove piston rod (14) from body (13).
c. Remove cotter pin (30) and nut (29) securing head (28) to piston rod (14).
d. Remove retainer ring (15) from cap (20). Remove all backup rings, O-rings, washer, laminated shim, scraper and felt wiper from piston rod, head, body and cap.

FLAP ACTUATOR - REASSEMBLY **B**. (See figure 2-10.)
a. Clean all parts in Stoddard solvent or equivalent. Dry with clean, dry compressed air.
b. Inspect parts for nicks, scratches, or excessive wear. Replace defective parts.
c. Buff out minor defects using an oil stone and polish with crocus cloth.
d. Immerse O-rings and backup rings in MIL-H-5606 hydraulic fluid prior to installation.
e. Assemble O-ring (25) and backup rings (24) on rod (14).
f. Install head (28) on rod (14) and secure with nut (29) and cotter pin (30). Assemble O-ring (27) and backup rings (26) on head (28).
g. Apply a thin coat of MIL-H-5606 hydraulic fluid to head (28) and insert rod (14) with head (28) attached into body (13).
h. Assemble O-rings (19 and 22), backup rings (18 and 21), laminated shim (23) and felt wiper (4) in cap (20). Screw cap (20) on body as far as possible, assuring that the extend and retract ports are in line.
i. Tighten spanner nut (9) against cap (20) and lockwire.
j. Assemble scraper ring (17), washer (16), and retainer ring (15) in cap (20). Install rod end (1) with nut (3) and key lock (2) in rod (14).
k. Connect actuator to a hydraulic test bench. Pressure check actuator, both extend and retract positions, to 2250 psi for 3 minutes. Leakage should not exceed one drop in the 3-minute period.
l. With the actuator retracted, adjust for 12.950 (±.010) inches between centerlines of actuator bearing and rod end bearing. Lockwire key lock (2).

FLAP ACTUATOR - INSTALLATION **B**. (See figure 2-9.)
a. Install actuator in aircraft and secure to bracket (4) with attaching parts.
b. Reconnect hydraulic lines to actuator.
c. Secure actuator rod end to sector (17) with attaching parts.
d. Pressurize the hydraulic system and cycle flaps checking for leaks and proper operation.
e. Reinstall access covers.

FLAP SYSTEM - TROUBLE SHOOTING. Refer to Section III.

REMOVAL AND INSTALLATION OF FLAP SYSTEM COMPONENTS. Removal and installation of flap system components should be performed as shown in the exploded view sequence in figure 2-9. Lubricate flap track rollers in accordance with Section I. Assure that flap track assemblies and nose tracks are clean.

FLAP SYSTEM - RIGGING **A**. (See figure 2-9.)

Note

Flap rigging is begun with flaps up, flap hydraulic cylinder fully extended, and flap cables slack.

A Aircraft 23-003 thru 23-089 Not Incorporating AMK73-5.

B Aircraft 23-090 thru 23-099 and Aircraft Incorporating AMK73-5.

a. Align rigging pin hole (18) in pulley (28) with rigging pin hole (18) in bracket (30) and insert rig pin from the top only. The rigging pin shall extend approximately halfway through the pulley.
b. Adjust rod end (53) on hydraulic actuator to establish 0.06 inch minimum clearance between rod end (53) and the bottom of the cutout in the center shaft (22).
c. Align rigging pin holes (18) in the left and right wing sectors (17) with rigging pin holes (18) in brackets (30) and insert rig pins.
d. Check for 0.03 inch minimum clearance between the sectors and wing spar 8.
e. Adjust flap pushrod on both flaps until the flap rollers contact the forward end of the flap track.
f. Adjust cable tension to 100 (±25) pounds at 75° F.
g. Remove rigging pins and shorten left and right flap pushrod one full thread to insure positive positioning of the flap rollers against the forward end of the tracks when the flaps are in the full up position.
h. Safety flap cable turnbuckles.
i. Adjust flap position indicating system as required to accurately indicate flap position.

Note

The flap position indicator is adjusted at the Position Indicator Calibration Assembly (Section VI).

j. Adjust push-pull cable clevis so there is no hydraulic fluid flow through the flap control followup valve when the flaps are fully up.
k. Cycle flaps several times while checking for proper travel, freedom of operation, and indicator accuracy.
l. With the flaps in the down position, the spanwise movement (end play) may be up to 0.34 inch maximum.

FLAP SYSTEM - RIGGING [B]. (See figure 2-9.)

Note

Flap rigging is begun with flaps up and both hydraulic actuator rod ends disconnected from the LH and RH sectors.

a. Align rigging pin holes (18) in bracket (30) with holes (18) in sector (17) and insert rigging pin.
b. Check for 0.03 inch minimum clearance between the sectors and spar 8.
c. Adjust flap pushrods until the flap rollers contact the forward end of the flap tracks.
d. Adjust cable tension to 100 (±25) pounds at 75° F.
e. With hydraulic actuators fully retracted (bottomed internally), adjust rod end terminals and attach to sectors.
f. Remove bolts attaching actuator rod end terminals to sectors and turn rod ends 1/2 turn clockwise (shortening retracted length of cylinders approximately 0.021 inch).
g. Attach rod end terminals to sectors and adjust flap control valve microswitch (35) to actuate at the exact position determined by the sectors with the rigging pins installed.
h. Safety flap cable turnbuckles and remove rigging pins.

Note

After adjusting the hydraulic actuator rod end terminals, all cycling must be completed through the flap control valve. The flaps are rigged so that the limit switch closes the flap control valve just before the actuator bottoms out in the flaps up position.

i. Cycle flaps several times while checking for the proper travel and indicator accuracy.

Note

The flap position indicator is adjusted at the Position Indicator Calibration Assembly (Section VI).

j. With flaps in the down position, the spanwise movement (end play) may be up to 0.34 inch maximum.

SPOILER SYSTEM. (See figure 2-11.) The spoilers, mounted on the upper wing surface immediately forward of the flaps, hinge up at an angle of 45 1/2° (+0°, -5°). The spoiler travel arc is governed by rollers and tracks. The tracks are attached to the middle hinge bracket on the wing rear spar. The spoilers are controlled by a switch on the cockpit center pedestal. Positioning the control switch energizes an electrically actuated hydraulic control valve which directs hydraulic pressure to both spoiler hydraulic actuators.

Note

The hydraulic portion of the spoiler system is discussed in Section III of this Service Manual.

Adjustable switches, located adjacent to each spoiler actuator, light the SPOILER indicator on the readout panel when the spoilers are not down and locked.

SPOILER ACTUATOR - REMOVAL. (See figure 2-11.)
a. Place the aircraft on jacks.
b. Depressurize the hydraulic system. (Refer to HYDRAULIC SYSTEM, Section III.)
c. Remove spoiler actuator access panel. (Refer to figure 1-3.)
d. Disconnect extend and retract hydraulic lines and cap. Tag hydraulic lines.
e. Remove attaching parts and actuator from aircraft.

SPOILER ACTUATOR - DISASSEMBLY. (See figure 2-12.)
a. Cut lockwire and remove key lock (2) from actua-

[B] Aircraft 23-090 thru 23-099 and Aircraft Incorporating AMK73-5.

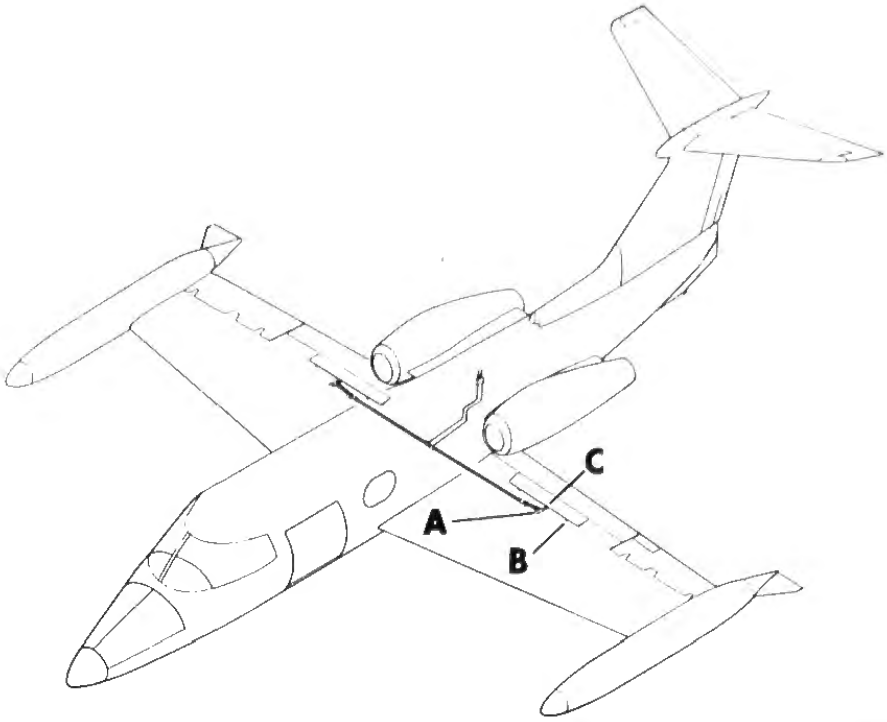

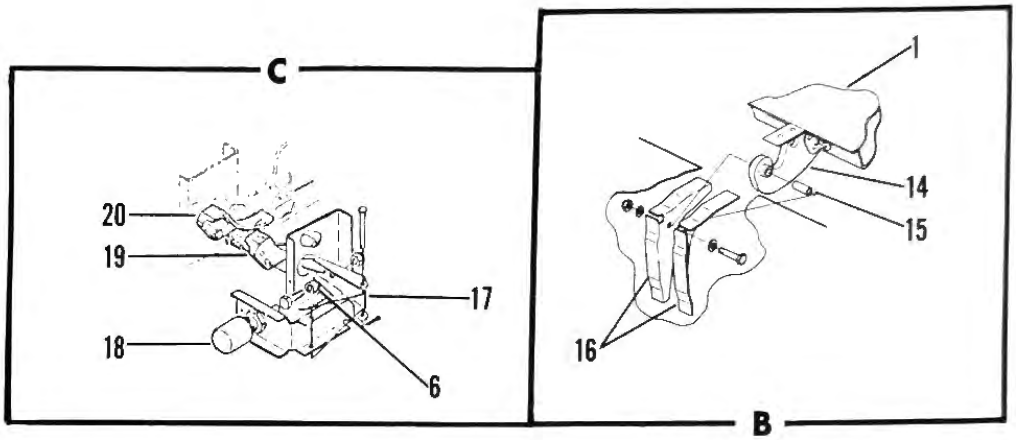

1. Spoiler
2. Actuator Arm Assembly
3. Channel - Outer
4. Bushing
5. Roller
6. Spacer
7. Channel - Inner
8. Spoiler Actuator
9. Bushing
10. Hydraulic Hose - Extend
11. Hydraulic Hose - Retract
12. Spring
13. Bearing
14. Hinge Arm
15. Bearing
16. Hinge Bracket
17. Switch Lever
18. Switch - Spoiler
19. Track Roller - Outboard
20. Track Roller - Inboard

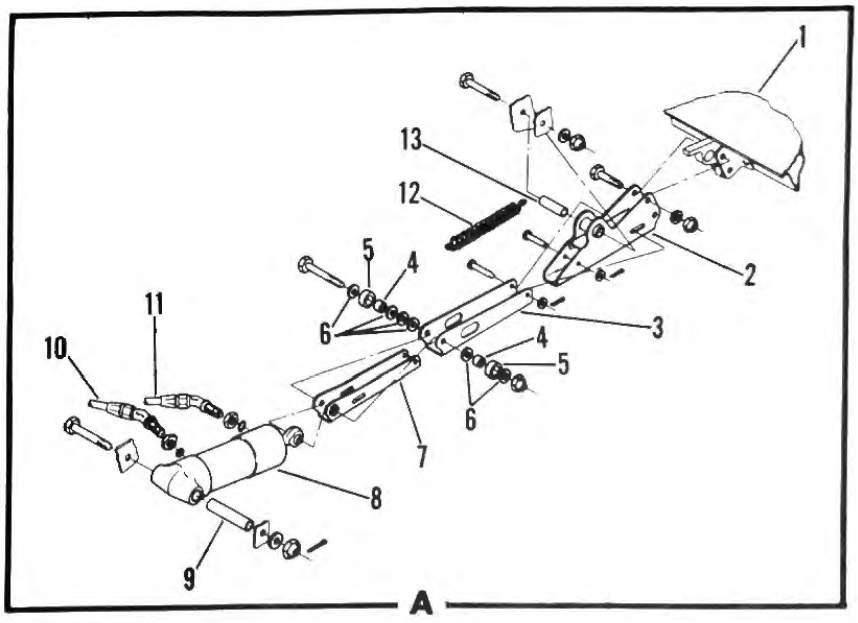

Figure 2-11. Spoiler Installation

1. Rod End
2. Key Lock
3. Locknut
4. Lock Ring
5. Felt Wiper
6. Backup Ring
7. O-Ring
8. Gland
9. Backup Ring
10. O-Ring
11. Piston Rod
12. Backup Rings
13. O-Rings
14. Barrel Assembly
15. Screw

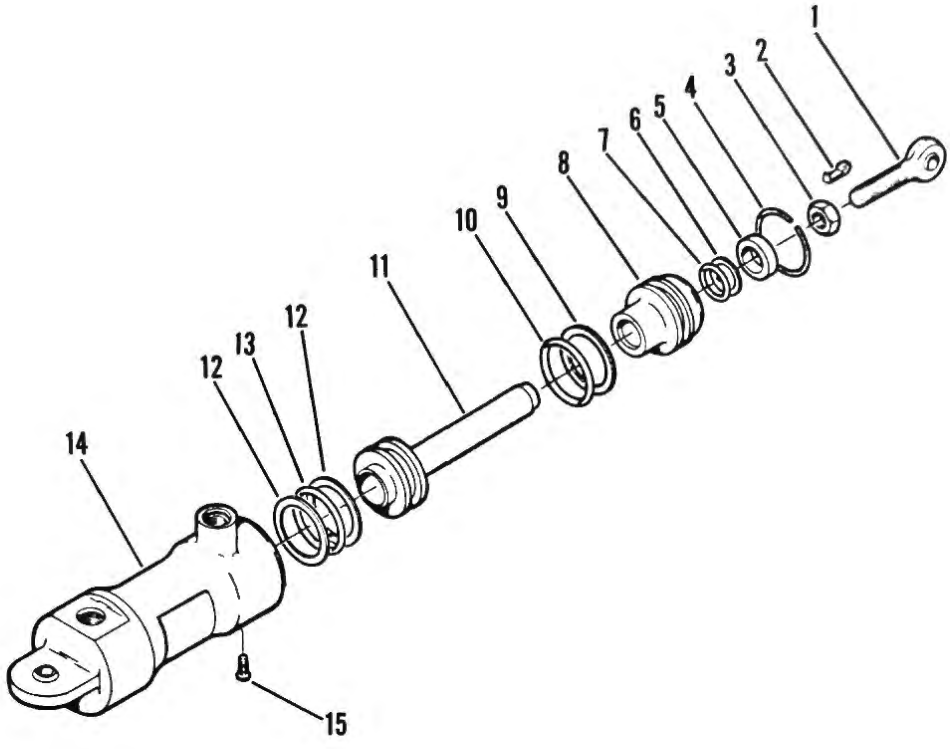

Figure 2-12. Spoiler Actuator Assembly

tor rod end. Loosen locknut (3) and remove rod end (1) and locknut from piston (11).

b. Remove screw (15) from barrel assembly (14) and depress gland (8) sufficiently to allow removal of lock ring (4).

c. Remove piston rod (11) with gland (8) attached from barrel assembly (14). Slide gland (8) off piston rod (11).

d. Remove old O-rings and backup rings from gland (8) and piston rod (11). Remove felt wiper (5) from gland (8).

SPOILER ACTUATOR - REASSEMBLY AND INSTALLATION. (See figure 2-12.)

a. Clean all parts with Stoddard solvent or equivalent. Dry parts with clean, dry compressed air.

b. Inspect barrel assembly, piston rod, and gland for nicks, scratches, or excessive wear. Replace defective parts.

c. Buff out nicks and scratches with an oil stone. Polish with crocus cloth.

d. Lubricate piston rod, O-rings, and backup rings with MIL-H-5606 hydraulic fluid.

e. Assemble O-ring (13) and backup rings (12) on piston rod (11).

f. Assemble O-ring (10) and backup ring (9) on gland (8) and O-ring (7), backup ring (6), and felt wiper (5) in gland (8).

g. Reinstall piston rod (11) into barrel assembly (14). Install gland (8) onto piston rod (11) and slide gland (8) into barrel assembly, assuring that holes for screw (15) in gland (8) and barrel (14) are aligned.

h. Reinstall snap ring (4) and screw (15). Assemble key lock (2), locknut (3) and rod end (1) on piston rod (11).

i. Connect actuator to hydraulic test bench and cycle actuator 25 times at 2250 psi (maximum). Maximum allowable leakage is one drop. Lockwire key lock (2).

j. Position actuator in wing and secure to wing structure with attaching parts.

k. Connect hydraulic lines and rig spoilers in accordance with SPOILER RIGGING, this section.

SPOILER SYSTEM - TROUBLE SHOOTING. Refer to Section III.

REMOVAL AND INSTALLATION OF SPOILER SYSTEM COMPONENTS. Removal and installation of spoiler system components should be performed as shown in the exploded view sequence in figure 2-11.

Note

When replacing actuators, channels, rollers, etc, that require disassembly of the roller and downlock mechanism, it is recommended that the entire mechanism be removed from the aircraft for bench maintenance.

SPOILER RIGGING. (See figure 2-11.)

Note

The following procedure should be used for rigging the spoilers after spoiler or spoiler actuator replacement or at any time the spoiler actuator rod end adjustment is changed.

a. Assure that spoiler actuator is secured to wing attachment bracket and that actuator rod end is secured to spoiler roller mechanism.

CAUTION

Be sure actuator rod end is screwed well out of the actuator to avoid damage to spoiler or wing structure when system hydraulic pressure is applied to adjust spoiler preload.

b. Apply full hydraulic pressure to aircraft.

Note

The spoiler actuator will now be fully bottomed out and the spoiler may be partially extended. The sliding hinge arm will be partially compressed.

c. Turn actuator shaft until roller mechanism channel is fully extended and is under some initial tension.
d. Tighten actuator rod end jamnut and safety.
e. Extend flaps and retract spoilers.
f. Set protractor on zero and place on spoiler surface.
g. Cycle spoilers and check for proper travel of 45 1/2° (+0°, -5°) and freedom of movement.
h. Adjust spoiler switches so that contact is broken when spoilers are fully retracted.

RUDDER CONTROL SYSTEM. (See figure 2-13.) Directional control of the aircraft is provided by the rudder. The rudder system consists of a dual set of rudder pedals, a cable system, and a rudder assembly. The rudder, mounted on a torque tube, is connected to the vertical stabilizer at three hinge points. The system is actuated manually by either set of rudder pedals or automatically through the autopilot servomechanism. Directional trim is provided by the electrically actuated rudder trim tab.

a. Rudder Pedals. The rudder pedals are connected to a forward sector assembly by bellcranks and push-pull tubes. The rudder cables extend from the forward sector assembly to the bellcrank assembly on the bottom of the rudder.

b. Stop Bolts. Two sets of rudder travel stop bolts (primary and secondary) are installed in the aircraft. The primary stops, located in the aft tailcone are designed to limit rudder travel when contacted by the rudder torque tube bellcrank. The secondary stops, installed in the cockpit forward of the pilot's right and copilot's left rudder pedals, limit rudder travel when contacted by the pedal arms.

c. Autopilot Connection. The autopilot servomechanism is connected to the rudder cables at fuselage station 308.86. The autopilot capstan slip clutch, set at 90 (±10) inch-pounds, allows pilot override of the autopilot at any time.

RUDDER CONTROL SYSTEM - TROUBLE SHOOTING.

TROUBLE	PROBABLE CAUSE	CORRECTION
IMPROPER RUDDER TRAVEL OR RUDDER PEDAL MOVEMENT.	Travel stops out of adjustment.	Rig rudder control system.
SLIGHT MOVEMENT OF RUDDER PEDALS DOES NOT MOVE RUDDER.	System not rigged properly.	Rig rudder control system.
RUDDER PEDAL MOVEMENT NOT SMOOTH OR EXCESSIVE FORCE REQUIRED TO MOVE RUDDER.	Binding in cable system.	Check cable tension. Check all pulleys, sectors, and push-pull tubes for mechanical defects.
	Autopilot engaged.	Disengage autopilot.

1. Rudder Pedal - RH
2. Push-Pull Tube
3. Bracket
4. Rudder Pedal - LH
5. Bushing
6. Push-Pull Tube
7. Bearing
8. Elevator Sector (Ref)
9. Autopilot Followup
10. Rudder Torque Tube
11. Bearing Plate
12. Bellcrank
13. Push-Pull Tube
14. Torque Tube
15. Stop Bolt - Primary LH
16. Stop Bolt - Primary RH
17. Stop Bolt - Secondary
18. Rudder Sector
19. Turnbuckle
20. Servo Cable
21. Autopilot Yaw Servo
22. Elevator Cable (Ref)
23. Rudder Cable
24. Autopilot (Yaw) Followup
25. Channel
26. Pulley
27. Stop Pin
28. Bolt
29. Arm Followup

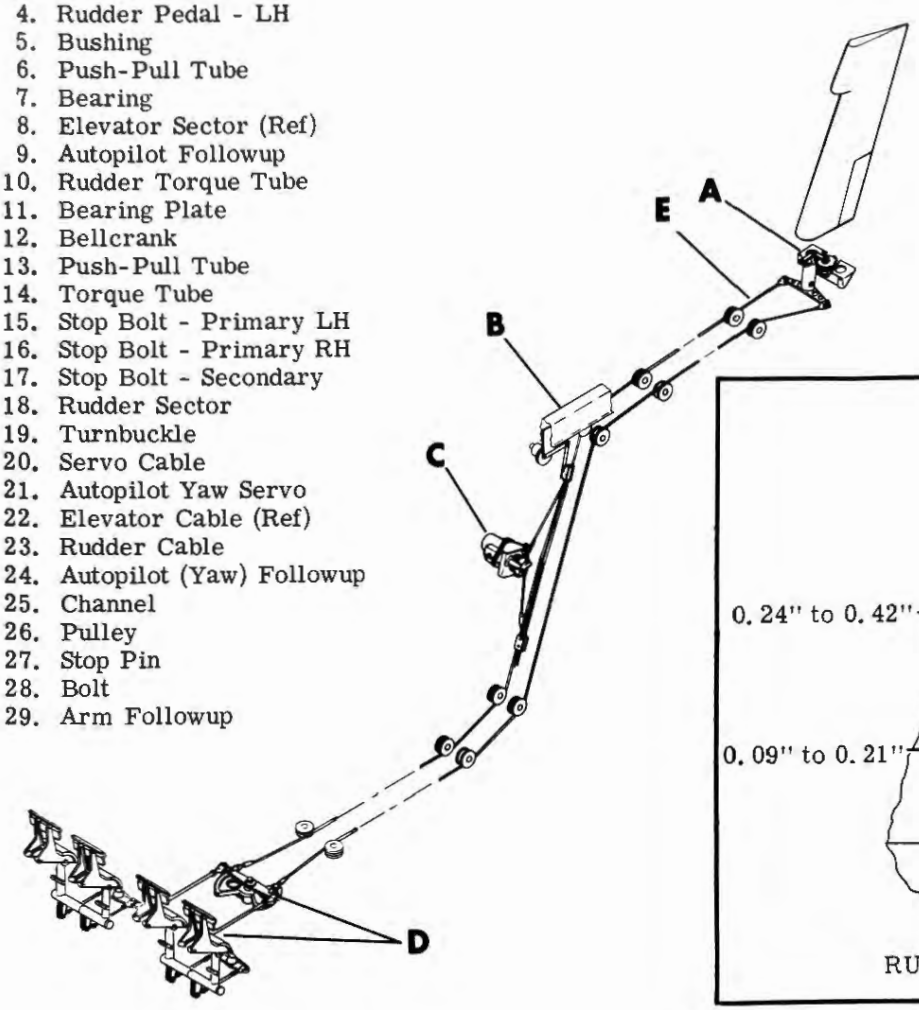

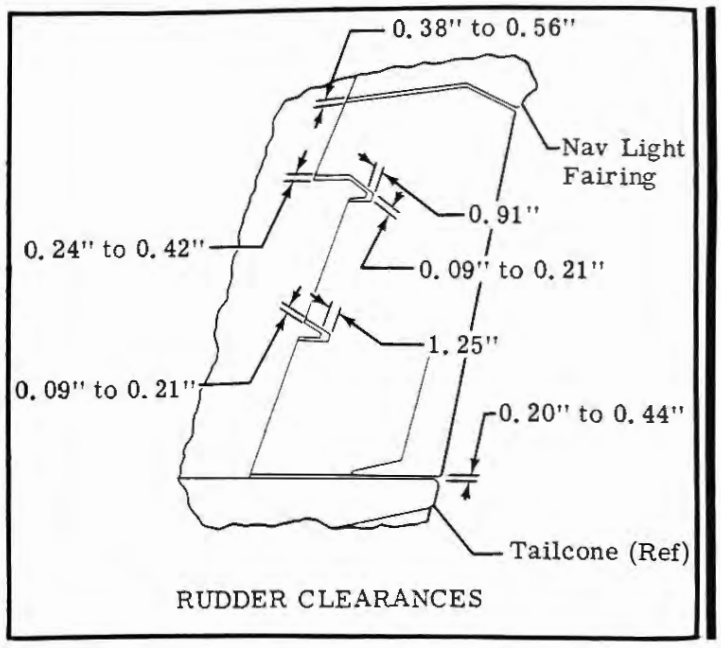

RUDDER CLEARANCES

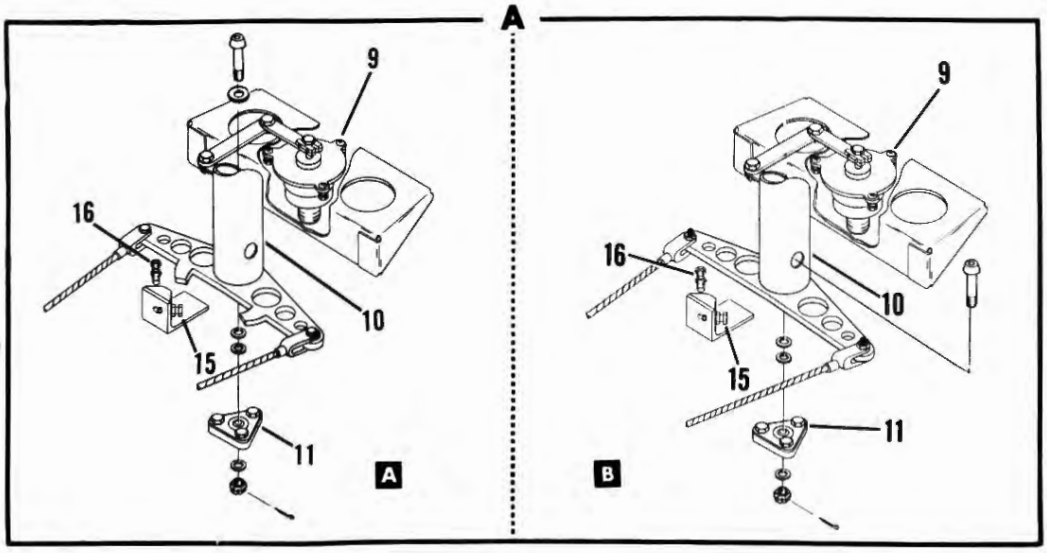

A Aircraft 23-003 thru 23-017 except aircraft modified by SK23/24-217.

B Aircraft 23-018 thru 23-099 except aircraft modified by SK23/24-217.

Figure 2-13. Rudder Control System Installation (Sheet 1 of 2)

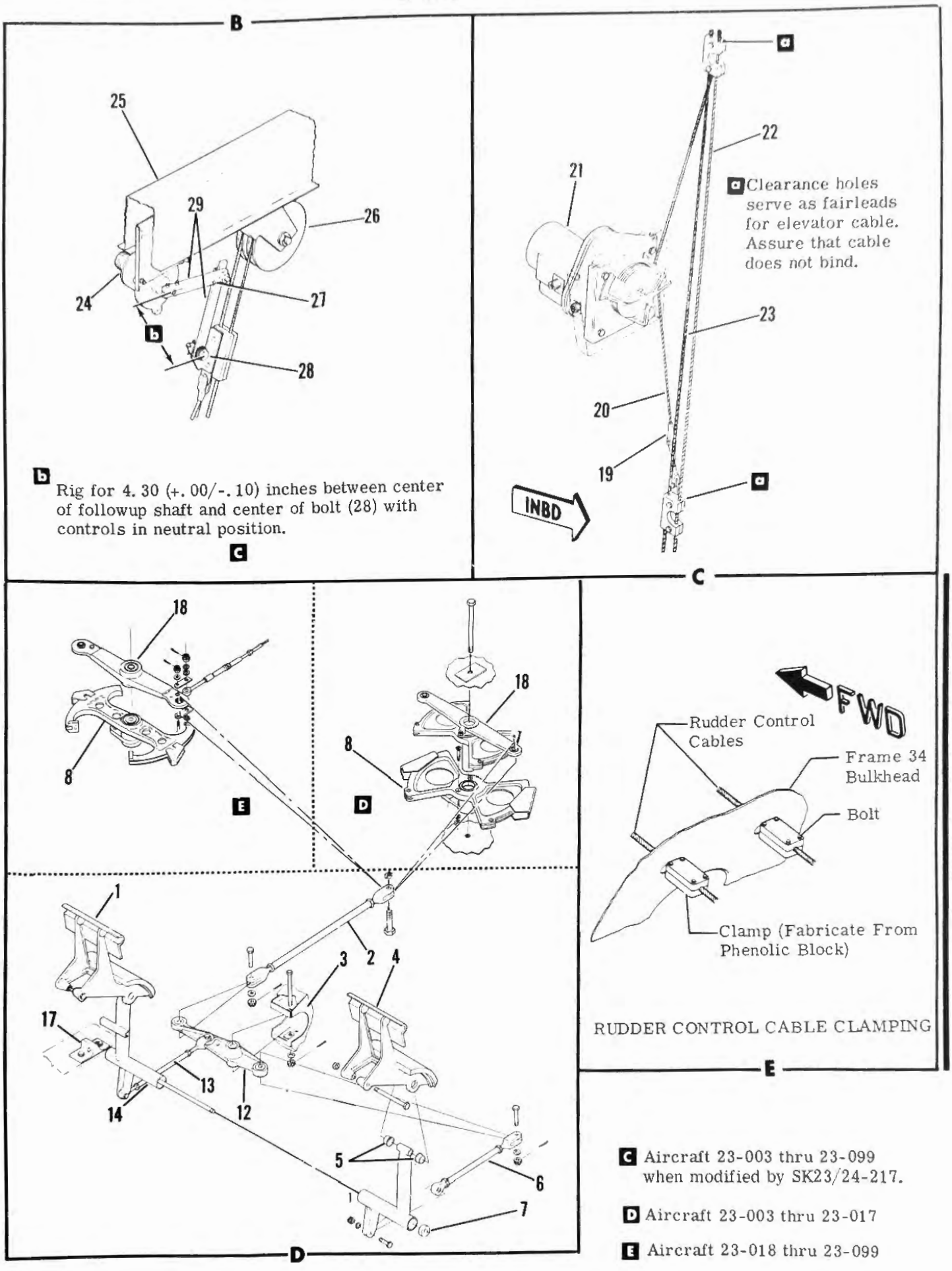

Figure 2-13. Rudder Control System Installation (Sheet 2 of 2)

RUDDER CONTROL SYSTEM RIGGING. (See figure 2-13.)

a. Remove access covers and floorboards as required for access to rudder controls.

b. Adjust rudder pedals to the neutral position as follows:

1. Install rigging pins through left and right bellcranks (12).
2. Adjust push-pull tubes (6 and 13) until rudder pedals are set to a neutral position of 7° (±1°) aft of vertical.
3. Install rigging pin through bellcrank (18) to hold bellcrank in proper rigging position.
4. On aircraft without rigging pin provisions, adjust left and right push-pull tubes (2) as required to position rudder bellcrank (18) perpendicular to BL 0.

Note

The aircraft should be on jacks prior to checking cable tension. All cable tensions specified are based on a temperature of 75° F.

c. Attach protractor to rudder to determine degree of rudder travel.

d. Adjust rudder to the neutral position as determined by protractor while adjusting cable tension to 75 (±5) pounds.

Note

When cable turnbuckles are loosened or tightened to adjust cable tension, it may be necessary to readjust the rudder to the neutral position. Repeat cable adjustments alternately until rudder is rigged to neutral at the required cable tension.

e. Safety turnbuckles and remove rigging pins.

f. Using the attached protractor, adjust the primary travel stops in the tailcone to obtain a rudder travel of 30° (-1°, +2°) left and right of neutral.

g. Lock primary travel stop bolts with jamnuts.

h. Adjust the secondary travel stops to contact when 100 (±25) pounds of pressure is applied to the rudder pedals. Lock stop bolts with jamnuts.

i. Adjust servo cable tension to 25 (±5) pounds.

Note

The primary cable tension between the servo cable attach points will be approximately 50 pounds, but it is not necessary to take tensiometer readings on this portion of the cable.

j. Operate rudder several times to assure proper travel and freedom of movement.

k. Check capstan slip clutch adjustment. (Refer to AUTOPILOT (YAW) CAPSTAN SLIP CLUTCH CHECK AND ADJUSTMENT, this section.)

l. Install all access covers and secure floorboards with all retaining screws prior to flying aircraft.

AUTOPILOT (YAW) CAPSTAN SLIP CLUTCH CHECK AND ADJUSTMENT. (See figure 2-5.)

a. Capstan Slip Clutch Check.

1. Assure that rudder control system and yaw servo cable are properly rigged.
2. Remove tailcone access door.

CAUTION

Care should be taken to prevent foreign objects and contamination from entering slip clutch assembly while servo is removed.

3. Disconnect electrical plug from servo and remove servo from aircraft.
4. Bolt torque adapter (22) to mounting plate (1), assuring that torque adapter gear is mated to cable drum assembly (23).

Note

The capstan clutch is set to slip at 90 (±10) inch-pounds. A 4.5:1 gear ratio exists between the torque adapter gear and the cable drum assembly, requiring a torque value of 18 to 22 inch-pounds.

5. Attach a torque wrench to torque adapter (22) and check for clutch slippage of 18 to 22 inch-pounds.

Note

Hold torque wrench in a stationary position. Manually move rudder fully to left and right several times until clutch slippage is reasonably smooth. Observe torque wrench dial and take reading while moving rudder through its full travel range.

6. If slip clutch setting is within tolerance, reinstall yaw servo, connect electrical plug, and install tailcone access door.
7. If slip clutch setting is not within tolerance, refer to step b.

b. Capstan Slip Clutch Adjustment.

1. Deleted.
2. Remove shroud (13) from mounting plate (1).
3. Disconnect one end of servo cable and unwrap cable from cable drum (16).

Note

- Use care not to lose cable retainer (7) when removing cable from cable drum.
- Mounting plate, spring, wiper disc and locking ring are not removed from aircraft.

4. Remove cable drum assembly (23) from aircraft.

Learjet Temporary Service Manual Revision

SERVICE MANUALS AFFECTED: Gates Learjet Models 23, 24, 24B and 25.

FILING INSTRUCTIONS: File adjacent to page as listed below and retain until further notice.

Model 23 - File adjacent to page 2-28.
Model 24 - File adjacent to page 2-21.
Model 24B - File adjacent to page 2-26.
Model 25 - File adjacent to page 2-26.

REASON: To reflect safety wiring.

INSTRUCTIONS:

1. Model 23 - Under RUDDER CONTROL SYSTEM RIGGING, revise steps g. and h. as follows:

   g. Secure primary stop bolts with jamnuts. On aircraft incorporating SB 23/24/25-266, safety wire stop bolts.
   h. Adjust secondary stop bolts to contact when 100 (±25) pounds of pressure is applied to the rudder pedals. Secure stop bolts with jamnuts. On aircraft incorporating SB 23/24/25-266, safety wire stop bolts.

2. Model 24 - Under RUDDER CONTROL SYSTEM RIGGING, revise steps i. and j. as follows:

   i. Secure primary stop bolts with jamnuts. On aircraft incorporating SB 23/24/25-266, safety wire stop bolts.
   j. Adjust secondary stop bolts to contact when 100 (±25) pounds of pressure is applied to the rudder pedals. Secure stop bolts with jamnuts. On aircraft incorporating SB 23/24/25-266, safety wire stop bolts.

3. Models 24B and 25 - Under RUDDER CONTROL SYSTEM RIGGING, revise steps h. and i. as follows:

   h. Secure primary stop bolts with jamnuts. On aircraft incorporating SB 23/24/24-266, safety wire stop bolts.
   i. Adjust secondary stop bolts to contact when 100 (±25) pounds of pressure is applied to the rudder pedals. Secure stop bolts with jamnuts. On aircraft incorporating SB 23/24/25-266, safety wire stop bolts.

November 18, 1975

5. Place adapter block (20) in vise. Position cable drum assembly (23) in adapter block and secure with adapter pin (21).
6. Attach torque wrench to adapter gear (18) and place adapter gear into cable drum assembly (23).
7. After initial clutch breaking force occurs, move torque wrench to the left and right through entire clutch travel range.
8. Clutch slippage should occur at 90 (±10) inch-pounds.
9. Adjust clutch by loosening or tightening locknut (12). Tighten locknut to increase clutch torque; loosen locknut to decrease clutch torque.

Note

If the correct clutch torque settings cannot be obtained, disassemble the drum assembly, clean and relubricate the internal surface (both sides) of drum with a light application of Dow Corning No. 33 grease. Reassemble drum assembly and adjust slip clutch by repeating steps 5. thru 9.

10. Install cable drum assembly (23) on mounting plate (1).
11. Install cable retainer (7) on servo cable ball.
12. Rotate cable drum assembly so that cable ball hole points aft.
13. Insert servo cable ball, with retainer, into cable ball hole and wrap loose end of servo cable completely around drum.
14. Attach loose end of servo cable previously removed and install shroud (13).
15. With rudder and elevator control systems in the neutral position, adjust servo cable tension to 25 (±5) inch-pounds. (Refer to RUDDER CONTROL SYSTEM RIGGING, this section.)
16. Install autopilot yaw servo and connect electrical plug.
17. Install tailcone access door.

REPLACEMENT AND ADJUSTMENT OF YAW DAMPER FOLLOWUP. (See figure 2-6.)

a. Assure rudder control system is properly rigged and insert rigging pin in rudder bellcrank. This will hold rudder in neutral during followup installation and adjustment.

b. Gain access to the followup installation. Disconnect electrical plug and loosen and remove followup arm from followup shaft. Remove attaching parts and followup from aircraft.

Note

- **A** Prior to installing new followup, align detent dot in followup shaft with detent dot on followup housing.
- **B** Prior to installing new followup, align detent dot in followup shaft and detent dot on followup housing 180° apart.

c. Install followup and secure with attaching parts. Connect electrical plug to followup and install followup arm on followup shaft.

d. Remove autopilot computer/amplifier from its rack and remove computer/amplifier perforated lid.

e. Fabricate a jumper wire approximately 2 feet long of insulated AWG 24 wire by stripping insulation from both ends.

f. Remove the yaw calibration module from computer/amplifier, locate pin 13, and secure one end of jumper wire fabricated in step e to pin 13.

g. Install yaw calibration module in computer/amplifier and slide computer/amplifier in rack.

h. Remove the computer/amplifier front cover and set the W. O. -SHORT switch to SHORT.

Note

Followup output is an AC signal and is measured in millivolts. Adjust sensitivity of voltmeter to read millivolts.

i. **A** Connect a Simpson voltmeter or equivalent to the jumper wire and aircraft ground. Set the Yaw Damper switch to OFF, Battery switch to ON, Inverter switch to MAIN, and the Autopilot Master switch to on. Loosen followup arm from followup shaft and adjust followup shaft until voltmeter indicates zero voltage. With zero voltage indicated, the followup will be nulled. Tighten followup arm on followup shaft. Remove rigging pin and set Yaw Damper switch to YAW DAMPER.

j. **B** Connect a Simpson voltmeter or equivalent to the jumper wire and aircraft ground. Set the Yaw Damper switch to OFF, Battery switch to ON, Inverter switch to MAIN, and the Autopilot Master switch to on. Remove safety wire from followup housing clamp ring screws. Loosen clamp ring screws sufficiently to allow the followup housing to be rotated by hand. DO NOT USE PLIERS OR WRENCH to turn followup housing. Adjust followup housing until voltmeter indicates zero voltage. With zero voltage indicated, the followup will be nulled. Tighten clamp ring screws. Remove rigging pin and set Yaw Damper switch to YAW DAMPER.

k. With the yaw damper engaged, move rudder pedals to apply either right or left rudder. If rudder pedals go hard over, the followup shaft is turned 180° and step l **A** or step m **B** must be performed. If rudder pedals return to center, safety wire clamp ring screws and proceed with step n.

l. **A** Set Yaw Damper switch to OFF and insert rigging pin in rudder bellcrank. Loosen followup shaft on followup arm and rotate shaft 180°. Null followup by adjusting shaft until voltmeter indicates zero voltage. Tighten followup arm on followup shaft. Remove rigging pin.

m. **B** Set Yaw Damper switch to OFF and insert rigging pin in rudder bellcrank. Loosen clamp ring screws securing followup housing to followup mounting plate. Rotate followup housing 180° by hand. DO NOT USE PLIERS OR WRENCH to turn followup housing. Null followup by adjusting followup housing until voltmeter indicates zero voltage. Tighten and safety

A Aircraft 23-003 thru 23-099 Except Aircraft Modified by SK23-217.
B Aircraft 23-003 thru 23-099 Modified by SK23-217.

wire clamp ring screws. Remove rigging pin.
n. Set Yaw Damper switch to OFF, the W. O. -SHORT switch on the computer/amplifier to W. O. position, and Battery, Inverter, and Autopilot Master switches to OFF.
o. Remove computer/amplifier from rack. Remove yaw calibration module from computer/amplifier and disconnect jumper wire from pin 13.
p. Install yaw calibration module in computer/amplifier and install perforated lid and front cover on computer/amplifier.
q. Install computer/amplifier in rack.
r. Install and secure all previously removed equipment.

RUDDER REMOVAL. (See figure 2-13.)
a. Remove screws from upper and lower access covers on rudder leading edge.
b. Deflect rudder to one side and remove access covers.
c. Remove rudder bellcrank access covers from tailcone.
d. Disconnect bonding jumper from rudder.
e. Disconnect trim tab actuator electrical plug and remove wire bundle clamp from rib.
f. Remove autopilot followup link from rudder torque tube.
g. Clamp the rudder control cables where they pass through the bulkhead in a manner such that cables will remain tight forward of the bulkhead.
h. Deflect rudder so that one of the rudder control cables become slack and remove that bolt and cable end from bellcrank. Remove opposite cable in the same manner.
i. Remove torque tube hinge fitting bolt at the bottom of the rudder torque tube.
j. Remove center and upper rudder hinge bolts and washers.
k. Deflect rudder so that it clears the aft bullet navigation light fairing and remove rudder.
l. If a new rudder is to be installed, proceed as follows:
1. Remove rudder trim tab.
2. Remove rudder trim tab actuator.
3. Remove rudder trim tab actuator potentiometer.

RUDDER INSTALLATION. (See figure 2-13.)
a. If new rudder is being installed, proceed as follows:
1. Install rudder trim tab.
2. Install rudder trim tab actuator.
3. Install rudder trim tab actuator potentiometer.
4. Mask off all bearing surfaces and paint rudder to match aircraft colors.
b. If any portion of a control surface is repainted, repaired, or replaced, a check must be made to determine if the balance is still in the prescribed limits. (Refer to CONTROL SURFACE BALANCE CHECK, this section.)
c. Install rudder on vertical stabilizer.
d. Insert washers and bolts at the upper and lower hinge points.
e. Attach torque tube to lower hinge fitting point and attach bonding jumper.
f. Deflect rudder to one side and attach rudder control cable on that side. Attach opposite cable in same manner. Remove clamps from rudder control cables.
g. Assure that trim tab actuator wire bundle is wrapped approximately 1-1/2 turns around the torque tube and tied so that the wire will not fall into the bellcrank stops.
h. Attach autopilot followup link to rudder torque tube.
i. Assure cables are rigged to proper tension. (Refer to RUDDER CONTROL SYSTEM RIGGING, this Section.)

RUDDER SPOILER TAB REPLACEMENT. (See figure 2-14.) Refer to AILERON SPOILER TAB REPLACEMENT, this section, for tab bonding procedure.

RUDDER TRIM TAB SYSTEM. (See figure 2-14.) The rudder trim tab is attached to the rudder by a continuous-type hinge. The tab is powered by a rotary-type electrical actuator located in the rudder leading edge. The yaw trim switch on the center pedestal is used to control the trim tab actuator. The yaw trim indicator indicates trim tab position. Trim tab travel is 11° (±1°) left and right.
a. Rudder Trim Tab System Rigging.
1. Actuate the yaw trim switch to move the rudder trim tab to the streamline neutral position and attach a protractor.
2. Check trim tab travel for 11° (±1°) both left and right.
3. Adjust electrical limit switches on rudder trim tab actuator.
4. Actuate trim tab system several times to check for proper operation.

Note

Check for correlation between rudder trim tab position and the yaw trim indicator. (Refer to CALIBRATION OF POSITION INDICATORS, Section VI.)

RUDDER TRIM TAB ACTUATOR. (See figure 2-14.) The rudder trim tab actuator is a rotary-type unit mounted in the rudder leading edge. The unit is a 26-volt DC, split field, series wound, reversible intermittent duty motor with a magnetic brake. The motor also includes a radio noise filter and externally adjustable limit switches. [A] An integral potentiometer ([B] a potentiometer) connected to the actuator control arm supplies an indication of tab position to the yaw trim indicator on the cockpit center pedestal. The yaw trim indicator is adjusted at the Position Indicator Calibration Assembly (Section VI).

[A] Aircraft 23-003 thru 23-034.

[B] Aircraft 23-035 thru 23-099.

RUDDER TRIM TAB SYSTEM - TROUBLESHOOTING

TROUBLE	PROBABLE CAUSE	CORRECTION
INCORRECT TAB TRAVEL.	Actuator incorrectly adjusted.	Adjust limit switches on actuator to obtain proper travel.
TRIM TAB DOES NOT ACTUATE.	No power.	Check YAW TRIM circuit breaker.
	Defective YAW TRIM switch or wiring.	Check switch and wiring for continuity.
	Defective tab actuator.	Replace actuator.
TRIM TAB OPERATION ROUGH AND ERRATIC.	Structural interference.	Check all adjacent surfaces to assure tab is free from interference.
	Defective tab actuator.	Replace actuator.

REMOVAL AND INSTALLATION OF RUDDER TRIM TAB COMPONENTS. Removal and installation of rudder trim tab components should be performed as shown in the exploded view sequence in figure 2-14.

HORIZONTAL STABILIZER SYSTEM. (See figure 2-15.) The movable horizontal stabilizer serves secondarily as a pitch trim controller. The stabilizer is attached to the vertical fin at two points. The aft attachment is the pivot point and consists of a large hinge pin inserted through heavy bearings in the stabilizer and vertical fin. The forward attach point is to a heavy duty electrical actuator. The bottom end of the actuator is secured to the vertical fin forward spar.

HORIZONTAL STABILIZER ACTUATOR. (See figure 2-15.)

a. The screwjack-type actuator adjusts the horizontal stabilizer to provide aircraft longitudinal trim. The unit consists of dual motors, each with a completely independent electrical system. Additional features of the actuator are thermal protectors, limit switches, slip clutches, radio noise filters, and an integral position transmitter. An indication of stabilizer position is sensed through the transmitter to the pitch trim indicator on the cockpit center pedestal.

b. Normal Operation. Normal control of the stabilizer is provided by the NOSE UP and NOSE DN trim switches on the pilot's and copilot's control wheels.

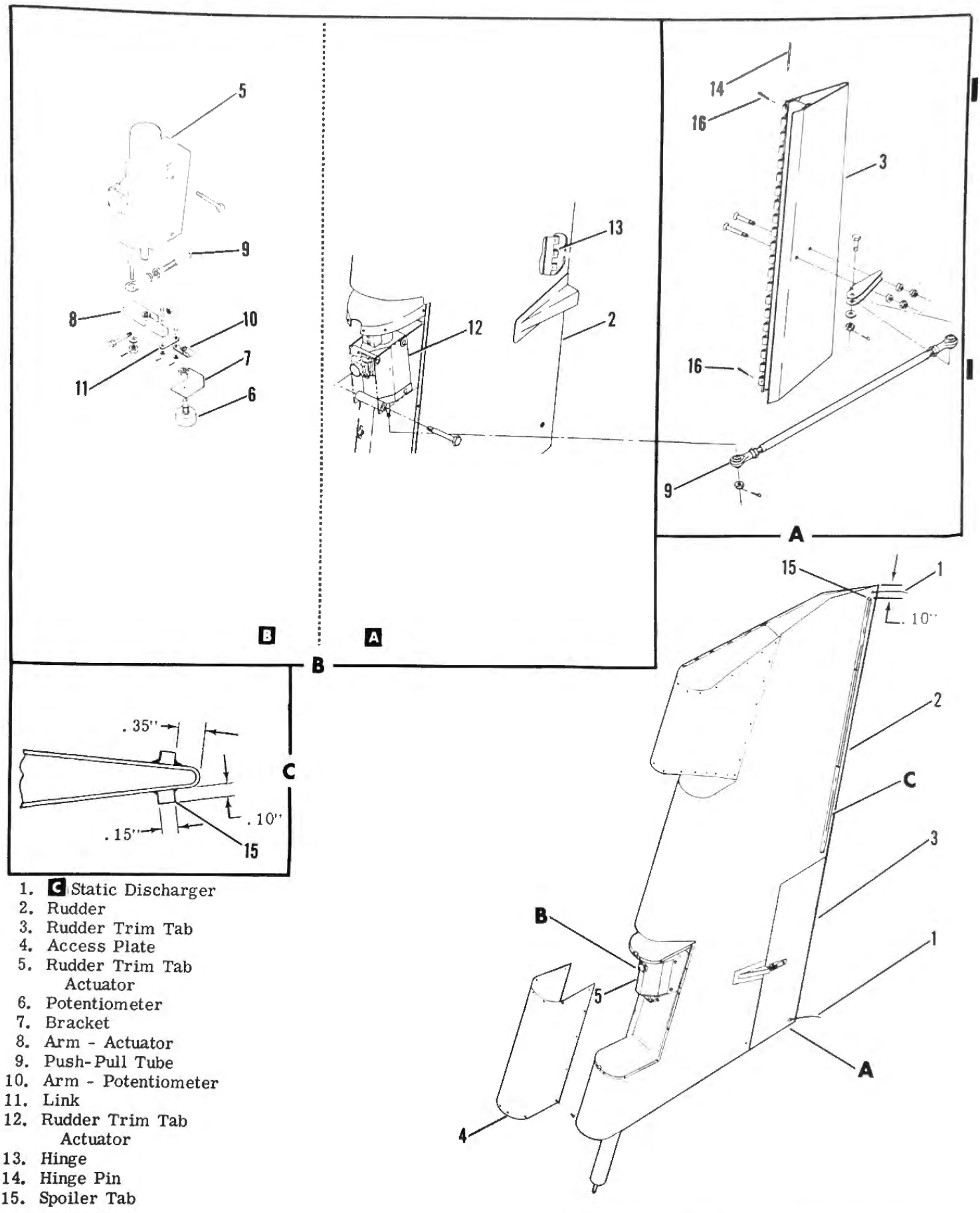

1. C Static Discharger
2. Rudder
3. Rudder Trim Tab
4. Access Plate
5. Rudder Trim Tab Actuator
6. Potentiometer
7. Bracket
8. Arm - Actuator
9. Push-Pull Tube
10. Arm - Potentiometer
11. Link
12. Rudder Trim Tab Actuator
13. Hinge
14. Hinge Pin
15. Spoiler Tab
16. Cotter Pin

A Aircraft 23-003 thru 23-034
B Aircraft 23-035 thru 23-099
C Aircraft 23-003 thru 23-039

Figure 2-14. Rudder Trim Tab Installation

1. Horizontal Stabilizer
2. Hinge Pin
3. Access Cover
4. Fitting - LH
5. Fitting - RH
6. Pin
7. Spar Assembly
8. Spacer
9. Stabilizer Actuator
10. Stabilizer Position Indicator (Pointer or Line)
11. Rigging Plate
12. Bolt
13. Stop

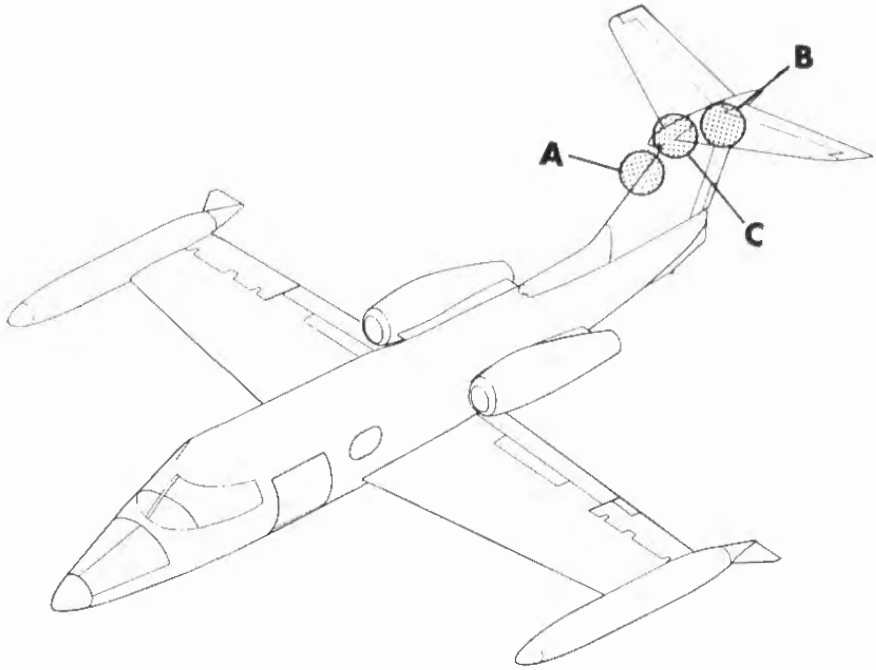

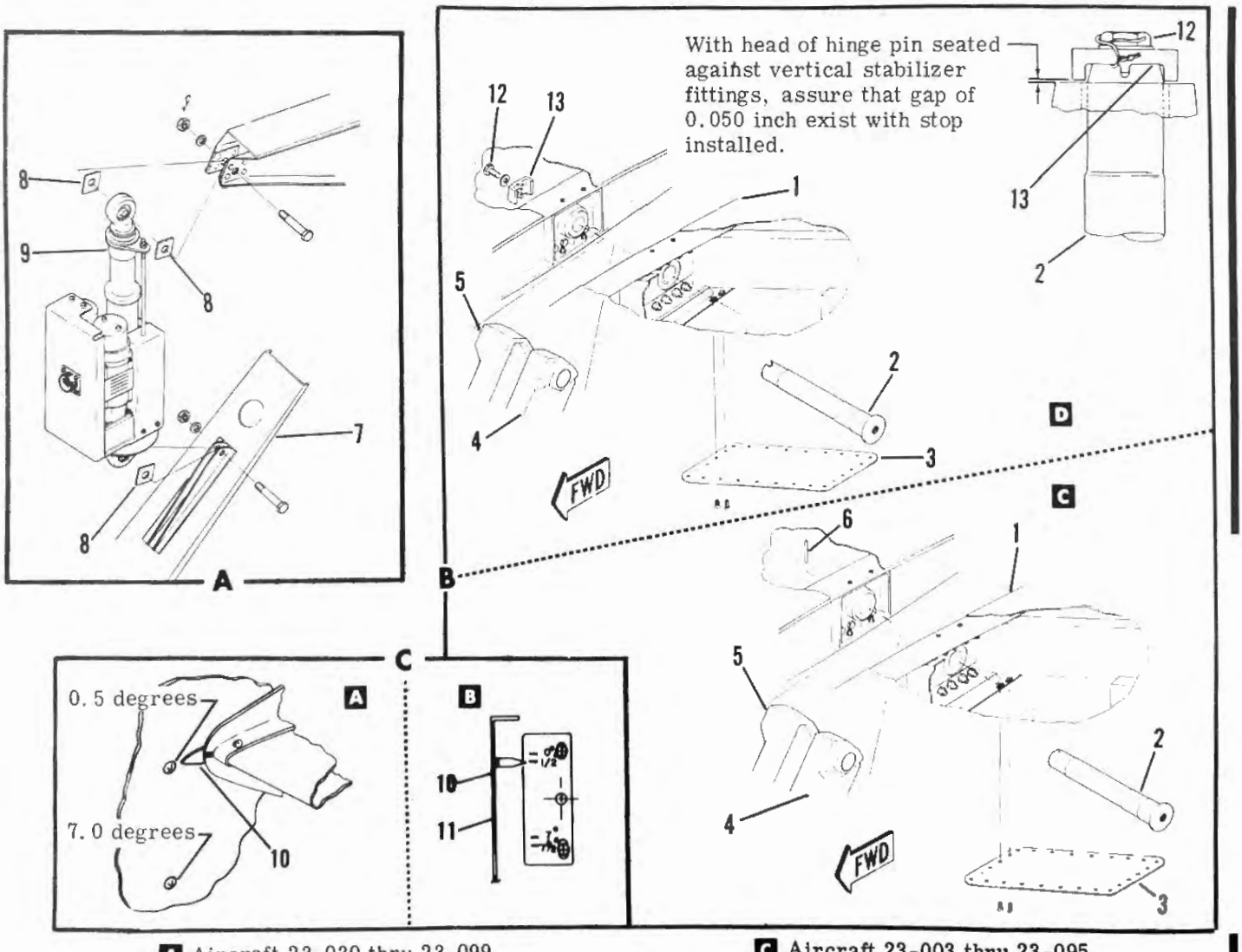

A Aircraft 23-030 thru 23-099
B Aircraft 23-050 thru 23-099
C Aircraft 23-003 thru 23-095
D Aircraft 23-096 thru 23-099

Figure 2-15. Horizontal Stabilizer Installation

Actuation of a trim switch applies 28 vdc from the right forward DC load bus to the actuator primary pitch motor via the PITCH circuit breaker and the PITCH TRIM switch.

Note

The control wheel trim switches are inoperative if the PITCH TRIM switch on the switch panel is set to EMER.

c. Emergency Operation. Emergency control of the stabilizer is provided by setting the PITCH TRIM switch, located on the switch panel, to EMER and utilizing the EMERGENCY PITCH TRIM switch on the cockpit center pedestal. Actuation of this switch applies power directly from the aircraft batteries to the actuator emergency and autopilot pitch trim motor via the EMERGENCY PITCH TRIM circuit breaker on the generator control panel.

Note

For additional information, refer to the Pitch Trim Actuator Installation Manual.

HORIZONTAL STABILIZER SYSTEM - TROUBLE SHOOTING.

TROUBLE	PROBABLE CAUSE	CORRECTION
INCORRECT STABILIZER TRAVEL.	Stabilizer actuator incorrectly adjusted.	Rig horizontal stabilizer.
STABILIZER INOPERATIVE.	Open electrical circuit.	Check circuit breaker and control circuit for continuity.
	Defective actuator.	Replace actuator.
STABILIZER MOVEMENT ROUGH OR ERRATIC.	Stabilizer binding on adjacent structure.	Check stabilizer for clearance.
	Defective actuator.	Replace actuator.

HORIZONTAL STABILIZER RIGGING. (See figure 2-15.)

a. Level the aircraft. (Refer to LEVELING, Section I.)

b. Attach stabilizer contour board and a bubble protractor to stabilizer.

Note

[A] The stabilizer position indicator is to be used for reference only. The upper screw is located 0.5° down from neutral and the lower screw is 7.0° down from neutral. Mark the neutral position on adjacent structure with tape.

[B] A master rigging plate and position indicator, located on the inner structure, is provided as an aid to check stabilizer position during maintenance. The rigging plate is marked to indicate allowable stabilizer travel tolerances.

c. Actuate stabilizer to the neutral position as indicated by a centered bubble in the protractor. Mark the neutral position on adjacent structure with tape.

d. Attach clinometer to stabilizer.

e. Actuate stabilizer and check that travel is within 0.5° down from neutral in the up position and within 7.0° to 7.5° down from neutral in the down position.

Note

The allowable tolerance for stabilizer travel is 0° to 0.5° down from neutral in the up position and 7.0° to 7.5° down from neutral in the down position.

f. Operate horizontal stabilizer from pilot's and copilot's control wheels and check for proper operation and correct travel.

g. When installing a replacement actuator, adjust the rod end at top of stabilizer actuator to maintain the allowable stabilizer travel tolerance in the up and down position. One complete turn of the rod end changes the actuator travel 10 minutes.

Note

Original equipment horizontal stabilizer actuators are adjusted at the Lear Jet Factory for a specific aircraft. Replacement actuators have adjustable rod ends. No adjustment of limit switches is allowed on any actuator.

[A] Aircraft 23-030 thru 23-099.

[B] Aircraft 23-050 thru 23-099.

h. Check that the pitch trim indicator indicates the correct stabilizer position throughout its entire travel range.

Note

If the pitch trim indicator requires calibration, make adjustments at the Position Indicator Calibration Assembly (Section VI).

STABILIZER ACTUATOR MOTOR CLUTCH CHECK. (See figure 2-16.)

a. Test Equipment:
   1. Ammeter - 0 to 5 amps DC
   2. Voltmeter - 0 to 30 VDC
   3. Power Supply - Able to give constant 25.5 VDC
   4. Test Leads
   5. High Voltage Breakdown Tester - Model 101-2.5 (Slaughter Co), or equivalent.

b. Test Procedure:

Note

To perform this test, the actuator must be removed from the aircraft.

1. Remove motors from actuator assembly. Tag all wires for reassembly.
2. Using the high voltage breakdown tester, set at 500 volts; test all motor wire leads to case.
3. Test low voltage operation of motor clutch. Use power supply starting at zero volts and slowly increase voltage output until motor clutch pulls in. (The motor clutch must pull in before 14 VDC, 3.5 amps.) If motor clutch requires more than 14 VDC to pull in, replace clutch. (See figure 2-16 for displacement.)

1. Actuator Motor (Primary)
2. Shim
3. Slip Clutch*
4. Horizontal Stabilizer Actuator Assembly

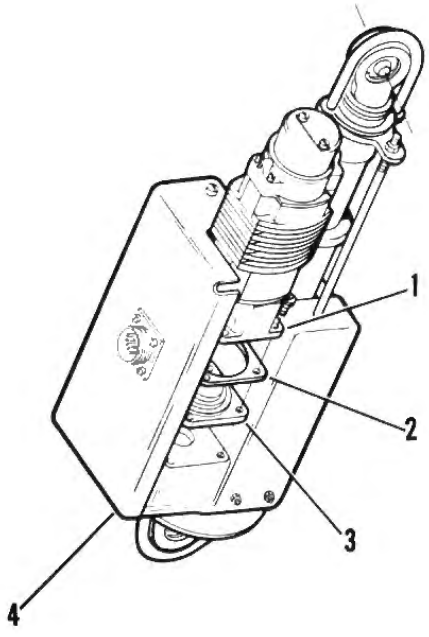

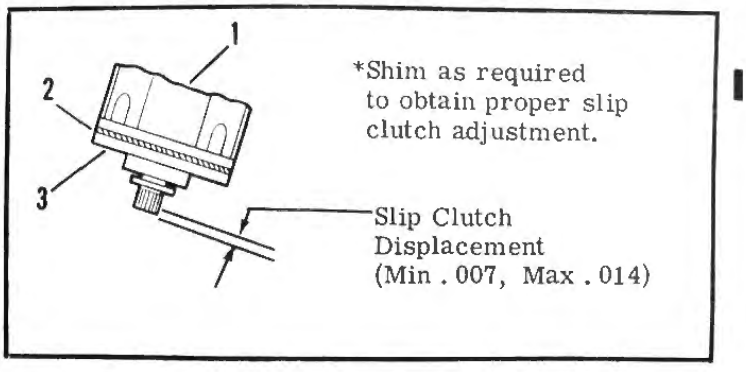

Figure 2-16. Stabilizer Actuator Motor Clutch Check

ELEVATOR CONTROL SYSTEM. (See figure 2-17.)
a. The elevators provide longitudinal control of the aircraft. Each elevator is connected to the horizontal stabilizer at three hinge points. The all metal elevators are connected to the elevator control system by torque tubes. The mechanical control system consists of torque tubes, bellcranks, sectors, cables, and push-pull tubes. The control columns in the cockpit are directly connected by a horizontal torque tube. Mounted on the torque tube is a bellcrank, which through a push-pull tube, provides rotary motion to the forward elevator sector. The forward elevator sector is connected to the aft elevator sector by a series of cables and pulleys. The aft sector operates the elevators through bellcranks, push-pull tubes, and an idler assembly.
b. Autopilot Connection. The autopilot servomechanism is connected to the elevator cables at fuselage station 308.86. The autopilot capstan slip clutch, set at 250 (±25) inch-pounds, allows pilot override of the autopilot at any time.

ELEVATOR CONTROL SYSTEM - TROUBLESHOOTING

TROUBLE	PROBABLE CAUSE	CORRECTION
ELEVATORS ARE NOT STREAMLINED WITH CONTROL COLUMNS IN NEUTRAL POSITION.	Elevator cable system not rigged properly.	Rig elevator control system.
IMPROPER ELEVATOR TRAVEL.	Travel limit stops not adjusted properly.	Adjust travel limit stops.
CONTROL COLUMN MOVEMENT NOT SMOOTH OR EXCESSIVE FORCE REQUIRED.	Binding in cable system.	Check cable tension. Check all elevator pulleys, brackets, bellcranks, sectors, and cables for mechanical defects.
	Autopilot engaged.	Disengage autopilot.

REMOVAL AND INSTALLATION OF ELEVATOR CONTROL SYSTEM COMPONENTS. Removal and installation of elevator control system components should be performed as shown in the exploded view sequence in figure 2-17.

ELEVATOR REMOVAL. (See figure 2-17.)
a. Remove horizontal stabilizer fairings from both sides of vertical stabilizer.
b. Remove aft vertical stabilizer tip access cover.
c. Remove bolt connecting elevator bellcrank and upper push-pull tube.
d. Remove inboard, center and outboard hinge bolts from elevator and disconnect bonding jumper on inboard end of elevator.
e. Remove elevator from aircraft.

ELEVATOR INSTALLATION. (See figure 2-17.)
a. Assure elevator is properly balanced. Refer to Control Surface Balancing, this Section.
b. Connect bonding jumper to horizontal stabilizer at inboard stabilizer hinge point.
c. Install elevator hinge bolts securing elevator to horizontal stabilizer at inboard, center and outboard hinge points.

Note

Some aircraft have the inboard hinge bearing attached using Hi-Lok fasteners which must not be reused. Replace fasteners with new ones.
If any shims were removed at the inboard bearing location they must be reinstalled.

d. Connect elevator bellcrank to upper push-pull tubes in vertical stabilizer.
e. Install leading edge access cover and elevator tip cover.
f. Check elevator for proper operation and travel.
g. Install aft vertical stabilizer tip access cover.
h. Install horizontal stabilizer fairings on both sides of vertical stabilizer.

ELEVATOR TIP COVER REMOVAL.
a. Remove screws from upper and lower surfaces of the elevator tip cover.
b. Slide elevator tip cover straight out and off of the elevator.
c. If a new tip cover is to be installed and the scupper and/or static discharger are to be reused, drill out rivets and remove scupper and/or static discharger.

Note

The static discharger is bonded to the surface and must be pried off.

ELEVATOR TIP COVER INSTALLATION. (See figure 2-16A.) When reinstalling the elevator tip cover, all that need be done is to position the tip cover on the elevator so that the holes align and secure with screws. When replacing the tip cover with a new tip cover, it is necessary to locate, drill and dimple the attachment screw holes in the new tip cover. In addition the new tip cover must be trimmed and the scupper and static discharger located and attached. When replacing the elevator tip

cover with a new one proceed as follows:

a. Position tip cover over the end of the elevator and push on to the elevator as far as possible.

Note

The open end of the tip cover will have to be spread slightly to go completely onto the elevator ribs. The top cover will probably protrude past the rib and overlap the scupper on the elevator.

b. Using a hole finder, locate as many holes in the tip cover as possible assuring the holes are located on center.

c. There are three basic methods of locating the remaining holes. One method is to place a sheet of heavy mylar or clear plastic over the elevator rib structure and mark the hole locations on the mylar. The mylar is then transferred to the new tip cover and aligned with the holes previously located. After locating the mylar on the tip cover, pilot holes are drilled through the mylar. The second method of locating the holes is by using the old tip cover, if it is not damaged too severely. The old tip cover may be cut in half, carefully aligned on the new tip cover, and used as a template to locate the holes. The third method is to locate several holes, using a hole finder, remove the tip cover, measure the hole locations in the rib structure and transfer the measurements in the tip cover.

d. After all holes have been located, final drill a No. 19 (.166 +.005/-.001) hole.

e. Excluding the hole located at the inboard most trailing edge of the tip cover, dimple all holes .329-.339 Dia. x 100°.

f. Position tip cover on elevator and align holes.

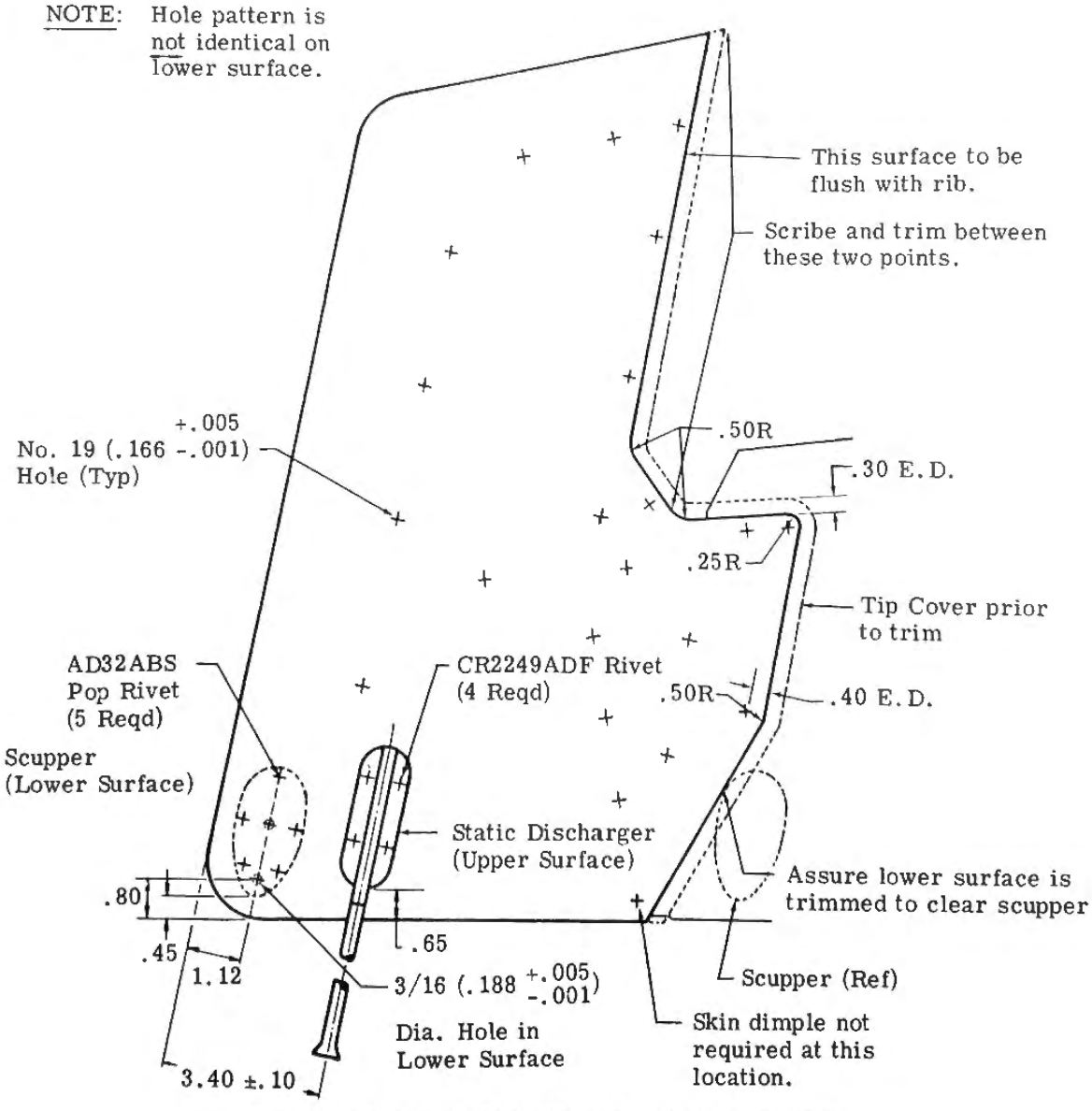

LEFT ELEVATOR TIP COVER (LOOKING DOWN)

Figure 2-16A. Elevator Tip Cover Installation

Secure with several screws on both the upper and lower surfaces.

g. Scribe a line on the inside of the tip cover along the rib at the forward inboard portion of the tip cover. This line should follow the rib down to and along the elevator hinge bracket.

h. Remove tip cover and trim along the scribe line. Reinstall tip cover and check to see that it is flush with rib and hinge bracket.

i. Trim and radius remaining portion of the inboard side of the tip cover to obtain correct edge distance as shown.

Note

If the elevator is painted, the paint line where the old tip cover was located may be used as a trim guide.

j. Locate and drill drain hole on lower surface as shown. Drill holes and secure scupper with AD32ABS pop rivets.

k. Locate static discharger base on upper surface as shown.

l. Buff area with sandpaper where static discharger will be located.

m. Position discharger base on tip cover, align holes and mark a locating line around the discharger base on the tip cover.

n. Mix epoxy adhesive, EC-2216 (3M Company), by adding 100 parts by weight of EC-2216-B to 140 parts by weight of EC-2216-A. Blend to a uniform gray color. Apply adhesive and position static discharger on tip cover.

o. Using four CR2249AD4 rivets, secure discharger to tip cover.

p. Install elevator tip and secure with screws.

q. Paint tip cover. Refer to Section I.

r. Check elevator overbalance.

s. Install elevator and check for proper clearances.

ELEVATOR CONTROL SYSTEM RIGGING. (See figure 2-17A.)

a. Set control columns to the neutral position 3° (±1°) aft of vertical.

b. [A] Adjust tube assembly (6) until forward elevator sector is perpendicular to BL 0. Center of this sector is 14° counterclockwise from BL 0.

c. [B] Install rigging pin through forward elevator sector.

d. Set horizontal stabilizer to 0.5° nose down.

Note

The following instructions are applicable only with stabilizer adjusted to 0.5° down since elevator travel varies with the stabilizer setting.

e. Attach contour plate to maintain elevator in neutral position with respect to the horizontal stabilizer.

f. [A] With elevators in neutral, adjust pushrods in the vertical stabilizer so that the aft elevator sector arm is 27°15' (±1°) down from W. L. 46.30.

g. [B] With elevators in neutral, install rigging pin through aft elevator sector.

Note

- Aircraft should be on jacks prior to checking cable tensions.
- All cable tensions specified are based on a temperature of 75° F.

h. Adjust elevator cable tension to 75 (±5) pounds.

Note

When cable turnbuckles are adjusted to set cable tension, the elevators may become out of adjustment and it may be necessary to reset elevators to the neutral position. Repeat adjustment procedure alternately until the elevators are in neutral with the required cable tension.

i. Safety turnbuckles and remove rigging pins.

[A] Aircraft 23-003 thru 23-069.
[B] Aircraft 23-070 thru 23-099.

1. Rudder Sector (Ref)
2. Shaft
3. Forward Sector - Elevator
4. Torque Tube
5. Bellcrank -Control Column
6. Tube Assembly
7. Autopilot Pitch Servo
8. Elevator Cable
9. Servo Cable
10. Elevator Down Spring
11. [D] Arm
12. [D] Autopilot (Pitch) Followup
13. Push Pull Tube
14. Aft Sector - Elevator
15. Stop Bolt - Elevator Up
16. Bracket
17. Stop Bolt - Elevator Down
18. Arm Assembly
19. Push Pull Tube - RH
20. Push Pull Tube - LH
21. Elevator Bellcrank - RH
22. Elevator Bellcrank - LH
23. Jam Nut
24. Clevis
25. Access Plate
26. Elevator Hinge (Typical)
27. Rudder Cable (Ref)
28. Channel
29. Pulley
30. Stop Pin
31. [E] Autopilot (Pitch) Followup
32. Arm - Followup
33. Bolt -
34. Rudder Bellcrank

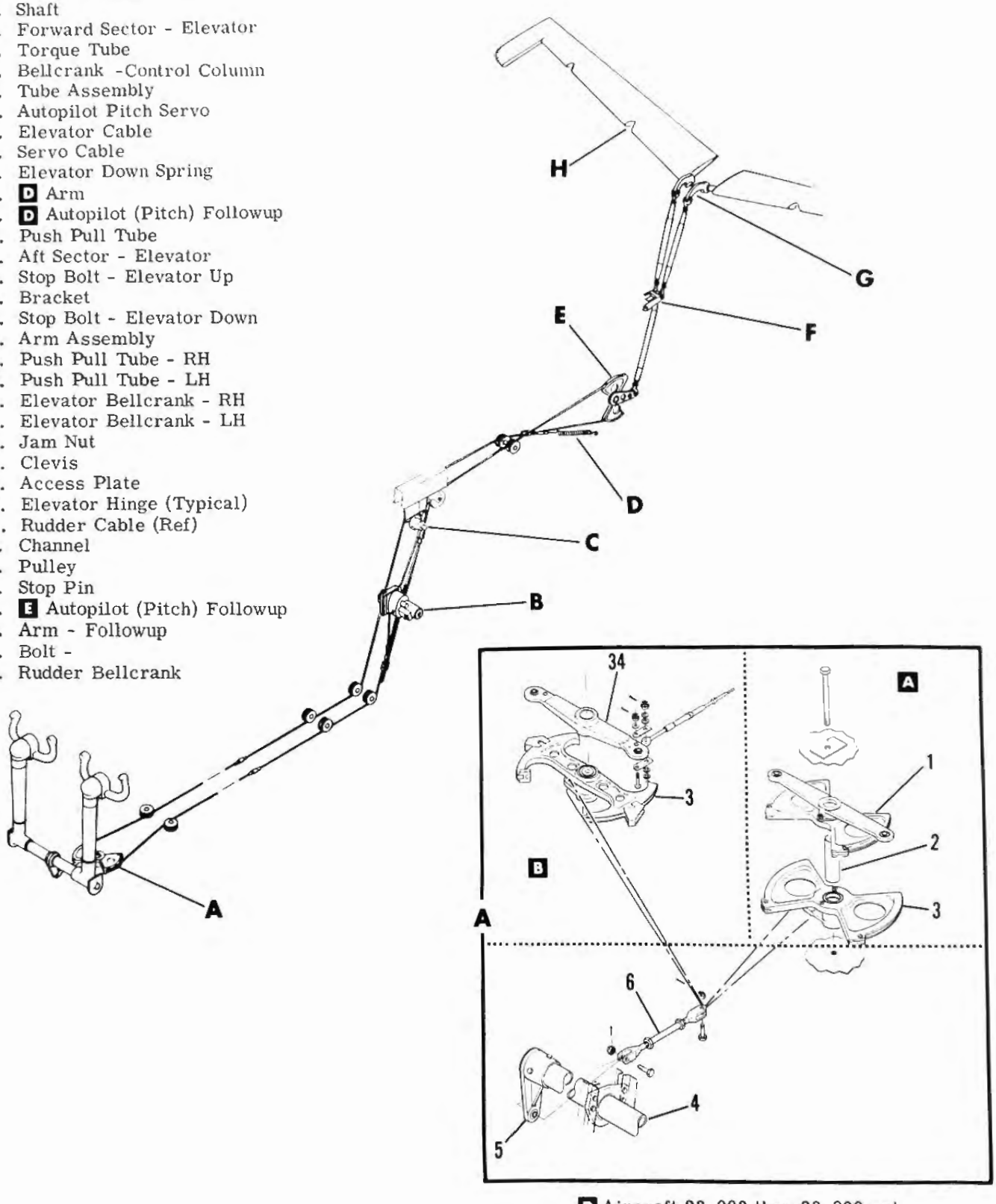

[D] Aircraft 23-003 thru 23-099 not modified by SK23/24-217.

[A] Aircraft 23-003 thru 23-017
[B] Aircraft 23-018 thru 23-099
[C] Aircraft 23-070 thru 23-099

[E] Aircraft 23-003 thru 23-099 when modified by SK23/24-217.

Figure 2-17. Elevator Control System Installation (Sheet 1 of 2)

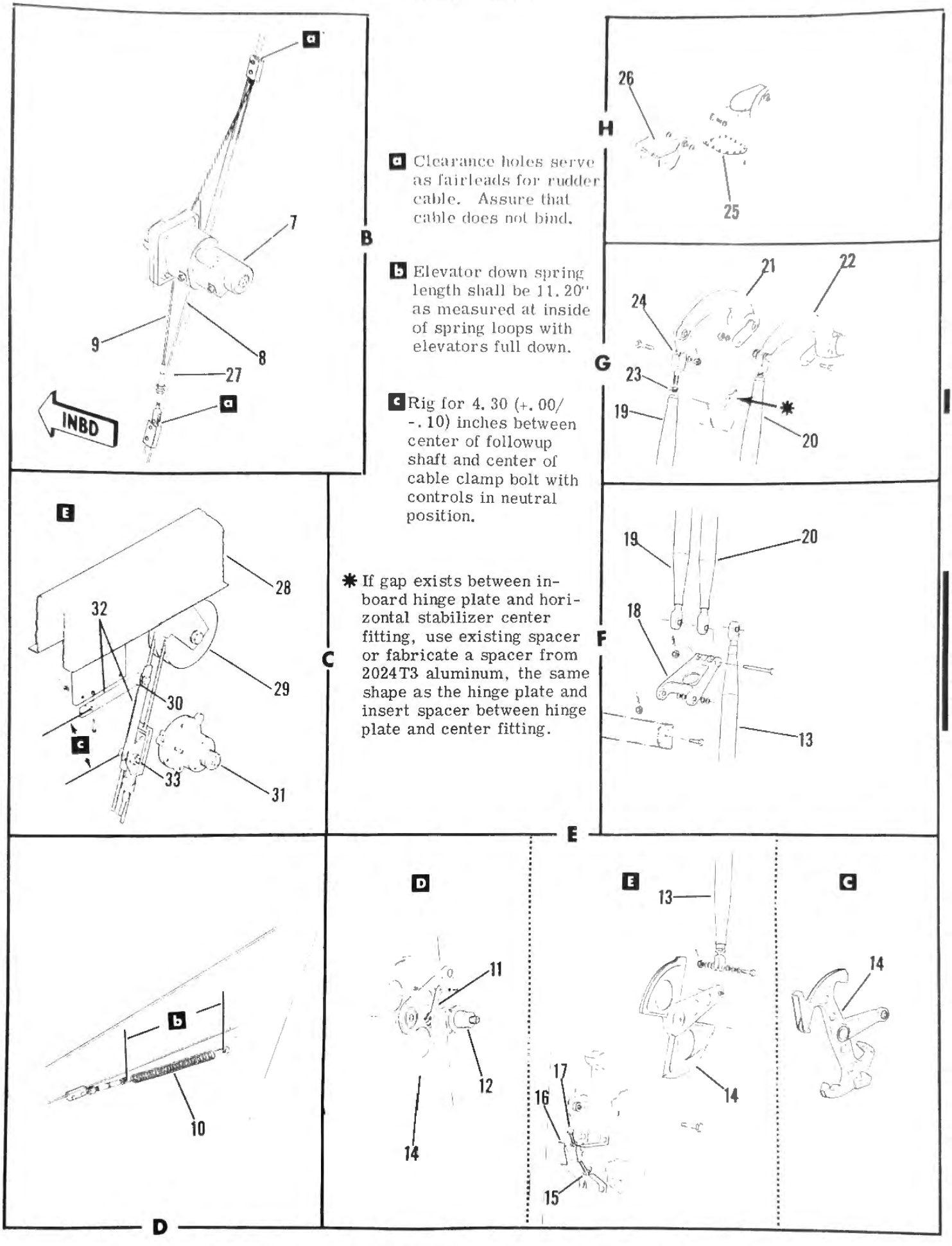

Figure 2-17. Elevator Control System Installation (Sheet 2 of 2)

j. Attach clinometer to elevator to measure travel.
k. Set primary up stop to obtain elevator up travel of 15° (+1°, -0°).
l. Set primary down stop to obtain elevator down travel of 15° (+1°, -0°).
m. Adjust secondary stops to contact when 100 (±25) pounds of force are applied to the control column wheel, forward and aft, after the primary stops make contact.
n. Lock all stopbolts with jamnuts.
o. Attach elevator servo cable to elevator system cable.
p. Adjust servo cable tension to 25 (±5) pounds.

Note

The primary cable tension between servo cable attach points will be approximately 50 pounds but tensiometer readings need not be taken on this portion of the cable.

q. Operate elevators several times to assure proper travel and freedom of movement.
r. Check capstan slip clutch adjustment. (Refer to AUTOPILOT (PITCH) CAPSTAN SLIP CLUTCH CHECK AND ADJUSTMENT, this section.)
s. Install access covers and secure floorboards with all retaining screws prior to flying aircraft.

AUTOPILOT (PITCH) CAPSTAN SLIP CLUTCH CHECK AND ADJUSTMENT. (See figure 2-5.)
a. Assure that elevator control system and pitch servo cable are properly rigged.

Note

- When checking capstan slip clutch torque with drum and bracket installed in the aircraft, attach torque wrench to torque adapter (22) and check for clutch slippage at 50 to 61 inch-pounds. Move control column fully forward and aft several times when checking clutch slippage.

- When performing capstan slip clutch adjustment with drum and bracket assembly removed from aircraft, adjust clutch slippage at 250 (±25) inch-pounds.

b. Check capstan slip clutch adjustment. (Refer to AUTOPILOT (YAW) CAPSTAN SLIP CLUTCH CHECK AND ADJUSTMENT, this section.)

REPLACEMENT AND ADJUSTMENT OF AUTOPILOT PITCH FOLLOWUP. (Refer to figure 2-6.)
a. Assure the elevator control system is properly rigged and insert rigging pins in elevator sectors. This will hold the elevators in neutral during followup installation and adjustment.
b. Gain access to the autopilot pitch followup. Disconnect the followup electrical plug and remove attaching parts and followup from the aircraft.

Note

- **A** Prior to installing new followup, align detent dot on followup shaft with detent dot on followup housing.

- **B** Prior to installing new followup, align detent dot in followup shaft and detent dot on followup housing 180° apart.

c. Install followup and secure with attaching parts. Connect electrical plug to followup and install followup arm on followup shaft.
d. Remove the autopilot computer/amplifier from its rack and remove the perforated lid from the computer/amplifier.
e. Fabricate a jumper wire approximately 2 feet long of insulated AWG 24 wire by stripping insulation from both ends.
f. Remove the pitch calibration module from computer/amplifier, locate pin 14, and secure one end of jumper wire fabricated in step e to pin 14.
g. Install the pitch calibration module in the computer/amplifier and install the computer/amplifier in its rack.

Note

Followup output is an AC signal and is measured in millivolts. Adjust sensitivity of voltmeter to read millivolts.

h. **A** Connect a Simpson voltmeter or equivalent to the jumper wire and aircraft ground. Energize the computer/amplifier by setting the Battery switch to ON, the Inverter switch to MAIN, and the Autopilot Master switch to on. Loosen followup arm on followup shaft and adjust followup shaft until voltmeter indicates zero voltage. With zero voltage indicated, the followup will be nulled. Tighten followup arm on followup shaft. Remove rigging pins and engage the autopilot by depressing the ENGAGE button on the autopilot flight controller.
i. **B** Connect a Simpson voltmeter or equivalent to the jumper wire and aircraft ground. Energize the computer/amplifier by setting the Battery switch to ON, the Inverter switch to MAIN, and the Autopilot Master switch to on. Remove safety wire from followup housing clamp ring screws. Loosen clamp ring screws sufficiently to allow the followup housing to be rotated by hand. DO NOT USE PLIERS OR WRENCH to turn followup housing. Adjust followup housing until voltmeter indicates zero voltage. With zero voltage indicated, followup will be nulled. Tighten clamp ring screws. Remove rigging pins and engage autopilot by depressing the ENGAGE button on the autopilot flight controller.
j. With the autopilot engaged, push control column forward for nose down and release. If control column goes forward giving a hard nose down, the followup is turned 180° and step k **A** or step l **B** must be performed. If control column returns to neutral, safety wire clamp ring screws and proceed with step m.

A Aircraft 23-003 thru 23-099 Except Aircraft Modified by SK23-217.
B Aircraft 23-003 thru 23-099 Modified by SK23-217.

Learjet Temporary Service Manual Revision

SERVICE MANUALS AFFECTED: Gates Learjet Models 23, 24, 24B and 25.

FILING INSTRUCTIONS: File adjacent to page as listed below and retain until further notice.

Model 23 - File adjacent to page 2-38.
Model 24 - File adjacent to page 2-30.
Model 24B - File adjacent to page 2-36C.
Model 25 - File adjacent to page 2-40.

REASON: To reflect safety wiring.

INSTRUCTIONS:

1. Model 23 - Under ELEVATOR CONTROL SYSTEM RIGGING, revise steps k., l. and m. as follows:

k. Set the primary up stop (located at aft sector in tailcone) to obtain elevator up travel of 15° (+1°/-0°). Secure upstop bolt with jamnut. On aircraft incorporating SB 23/24/25-266, safety wire stop bolt.
l. Set the primary downstop (located at aft sector in tailcone) to obtain elevator down travel of 15° (+1°/-0°). Secure downstop bolt with jamnut. On aircraft incorporating SB 23/24/25-266, safety wire stop bolt.
m. Adjust the secondary stop bolts on the forward elevator sector to contact their stops when 100 (±25) pounds of force is applied to the control column wheel (fore and aft) after the primary stops are contacted. Secure stop bolts with jamnuts. On aircraft incorporating SB 23/24/25-266, safety wire stop bolt.

2. Model 24 - Under ELEVATOR CONTROL SYSTEM RIGGING, revise steps j., k., and l. as follows:

j. Set the primary up stop (located at aft sector in tailcone) to obtain elevator up travel of 15° (+1°/-0°). Secure upstop bolt with jamnut. On aircraft incorporating SB 23/24/25-266, safety wire stop bolt.
k. Set the primary downstop (located at aft sector in tailcone) to obtain elevator down travel of 15° (+1°/-0°). Secure downstop bolt with jamnut. On aircraft incorporating SB 23/24/25-266, safety wire stop bolt.
l. Adjust the secondary stop bolts on the forward elevator sector to contact their stops when 100 (±25) pounds of force is applied to the control column wheel (fore and aft) after the primary stops are contacted. Secure stop bolts with jamnuts. On aircraft incorporating SB 23/24/25-266, safety wire stop bolt.

OVER

INSTRUCTIONS: (Continued)

3. Models 24B and 25 - Under ELEVATOR CONTROL SYSTEM RIGGING, revise steps i., j. and k. as follows:

i. Set the primary up stop (located at aft sector in tailcone) to obtain elevator up travel of 15° (+1°/-0°). Secure upstop bolt with jamnut. On aircraft incorporating SB 23/24/25-266, safety wire stop bolt.
j. Set the primary downstop (located at aft sector in tailcone) to obtain elevator down travel of 15° (+1°/-0°). Secure downstop bolt with jamnut. On aircraft incorporating SB 23/24/25-266, safety wire stop bolt.
k. Adjust the secondary stop bolts on the forward elevator sector to contact their stops when 100 (±25) pounds of force is applied to the control column wheel (fore and aft) after the primary stops are contacted. Secure stop bolts with jamnuts. On aircraft incorporating SB 23/24/25-266, safety wire stop bolt.

k. [A] Disengage autopilot by depressing the nose wheel steering button on the control wheel. Insert rigging pin into elevator sectors. Loosen followup arm from followup shaft and rotate shaft 180°. Null followup by adjusting shaft until voltmeter indicates zero voltage. Tighten followup arm on the followup shaft and remove rigging pins.

l. [B] Disengage autopilot by depressing the nose wheel steering button on the control wheel. Insert rigging pin in elevator sectors. Loosen clamp ring screws securing followup housing to followup mounting plate. Rotate followup housing 180° by hand. DO NOT USE PLIERS OR WRENCH to turn followup housing. Null followup by adjusting followup housing until voltmeter indicates zero voltage. Tighten and safety wire clamp ring screws and remove rigging pins.

m. Set Battery, Inverter, and the Autopilot Master switches to OFF.

n. Remove the computer/amplifier from its rack and remove the pitch calibration module from the computer/amplifier and disconnect the jumper wire from pin 14.

o. Install the pitch calibration module in the computer/amplifier and install the computer/amplifier perforated lid.

p. Install the computer/amplifier in its rack.

q. Install and secure all previously removed equipment.

[A] Aircraft 23-003 thru 23-099 Except Aircraft Modified by SK23-217.
[B] Aircraft 23-003 thru 23-099 Modified by SK23-217.

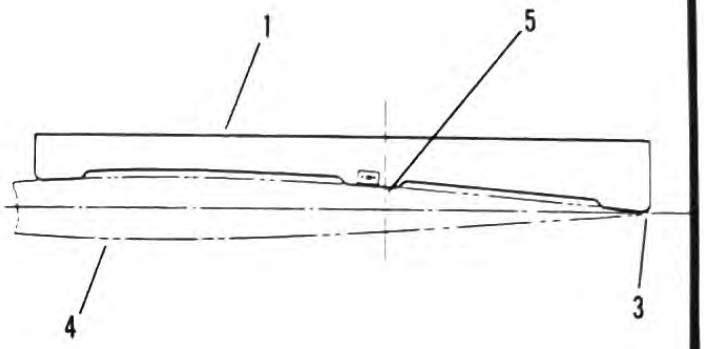

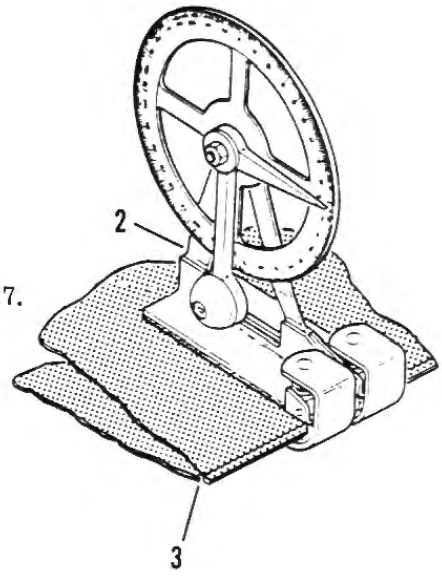

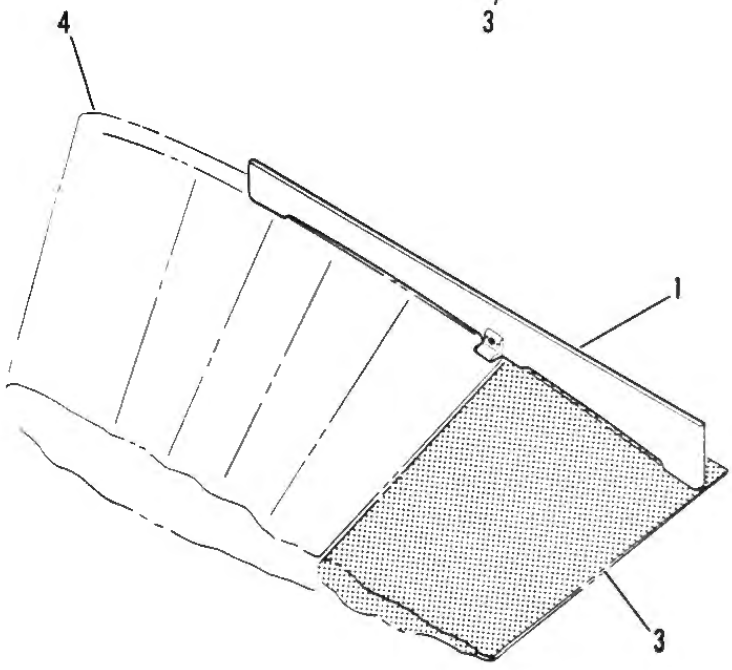

1. Contour Plate, P/N 2471002-1
2. Clinometer, P/N 2471004-1
3. Elevator Trailing Edge
4. Horizontal Stabilizer
5. Horizontal Stabilizer Rear Spar

Figure 2-17A. Elevator Control System Rigging.

AUTOPILOT PITCH SERVO REPLACEMENT. (See figure 2-17.)

a. Remove tailcone access door.

b. Remove bolts securing existing autopilot pitch servo.

Note

Removal of the pitch drum and bracket assembly or servo cable is not required.

c. Install new autopilot pitch servo with bolts previously removed.

d. Assure that elevator control system and autopilot pitch servo system is properly rigged.

e. Perform a functional check of new autopilot pitch servo as follows:

1. Manually move control wheels to full forward and aft positions to check that no binding exists in the control system.
2. Set Battery Switch and Primary Inverter Switch to ON.
3. Set Autopilot Master Switch to ON.
4. Depress Autopilot Engage Button.
5. Move control wheels forward and then aft.

Note

Control columns should return slowly to neutral from both the forward and aft positions.

6. Depress Autopilot Pitch Control and set to DN; control columns should move forward.
7. Depress Autopilot Pitch Control and set to UP; control columns should move aft.
8. Set all switches to OFF.

ELEVATOR SPOILER TAB REPLACEMENT [C]. (See figure 2-18.) Refer to AILERON SPOILER TAB REPLACEMENT, this section, for bonding procedure.

ADJUSTMENT AND RIGGING OF AILERON-RUDDER INTERCONNECT. (See figure 2-19.)

Note

Before rigging cables, adjust nuts on rod of spring cartridge so that they contact the spring followers and the spring followers contact the retainers simultaneously on both ends. Maximum end play shall not exceed .010 inch.

a. With both ailerons and the rudder in neutral, adjust the interconnect cable assembly to 25 (±5) pounds and secure with cotter pins.

b. Operate rudder and aileron systems through full travel in all combinations and check for full freedom of movement. Left rudder should produce left aileron and right rudder should produce right aileron.

STALL WARNING AND CONTROL SYSTEM. (See figure 2-20.) The dual stall warning and control system provides the crew with an indication of an impending aircraft stall and also commands an aircraft nose down attitude as corrective action. System components are: two angle of attack transducers on the forward fuselage, a stall warning computer amplifier in the nose section, a control column shaker on each control column, a normal accelerometer attached to frame 2 in the nose section, an angle of attack indicator, two ON-OFF control switches, and two power on stall warning lights located on the instrument panel. The system also utilizes the flap position transmitters and the autopilot elevator servomechanism.

a. Operation. The angle of attack transducers are supplied with a regulated voltage which is modified by the flap position transmitters. The wiper of the angle of attack transducer supplies a voltage to the computer amplifier which is proportional to the aircraft angle of attack. [When the aircraft angle of attack increases such that speed is 7% above aircraft stall speed, the stall warning computer amplifier energizes the control column shaker motors.] The shaker motors then produce a low frequency high amplitude buffet signal to the crew members. When the angle of attack increases to 5% above a stall condition, the computer amplifier energizes the down clutch of the autopilot servomechanism to command an aircraft nose down attitude. The amount of force applied in the nose down direction is initially 80 pounds at the control wheel. This force diminishes linearly through the normal accelerometer to maintain 1/2 "g" downward push.] As soon as the angle of attack decreases below the stall point, the nose down command is removed. In the event one angle of attack transducer vane increases 5% above a stall condition, due to wind gust or bird strike, the shaker will energize and the computer-amplifier will command a nose down attitude.[The amount of force applied is 50 pounds. This force diminishes linearly through the normal accelerometer to maintain 1/2 "g" downward push at the control wheel. The angle of attack indicator provides continuous readout of the aircraft angle of attack and is marked at the shaker and pusher onset points. Normal autopilot information is first fed into the stall warning computer amplifier and then to the normal autopilot elevator servomechanism. When the angle of attack increases to the pusher actuation point, the autopilot information is disconnected from the elevator servomechanism. The stall warning system is powered by the battery bus and the warning lights are powered by the forward DC load bus.

FUSELAGE. The fuselage is of all-metal semi-monocoque construction, consisting of stressed skin structure with transverse frames and longerons. Special attention has been paid to both fail safe abilities and a long fatigue life airframe. The "Area Rule" type fuselage is comprised of two major sections. The forward section extends from the nose cap aft to frame 22. The aft or tailcone section extends aft from frame 23 to the tail stinger. The

[C] Aircraft 23-003 thru 23-099 except aircraft modified by SK23/24-248.

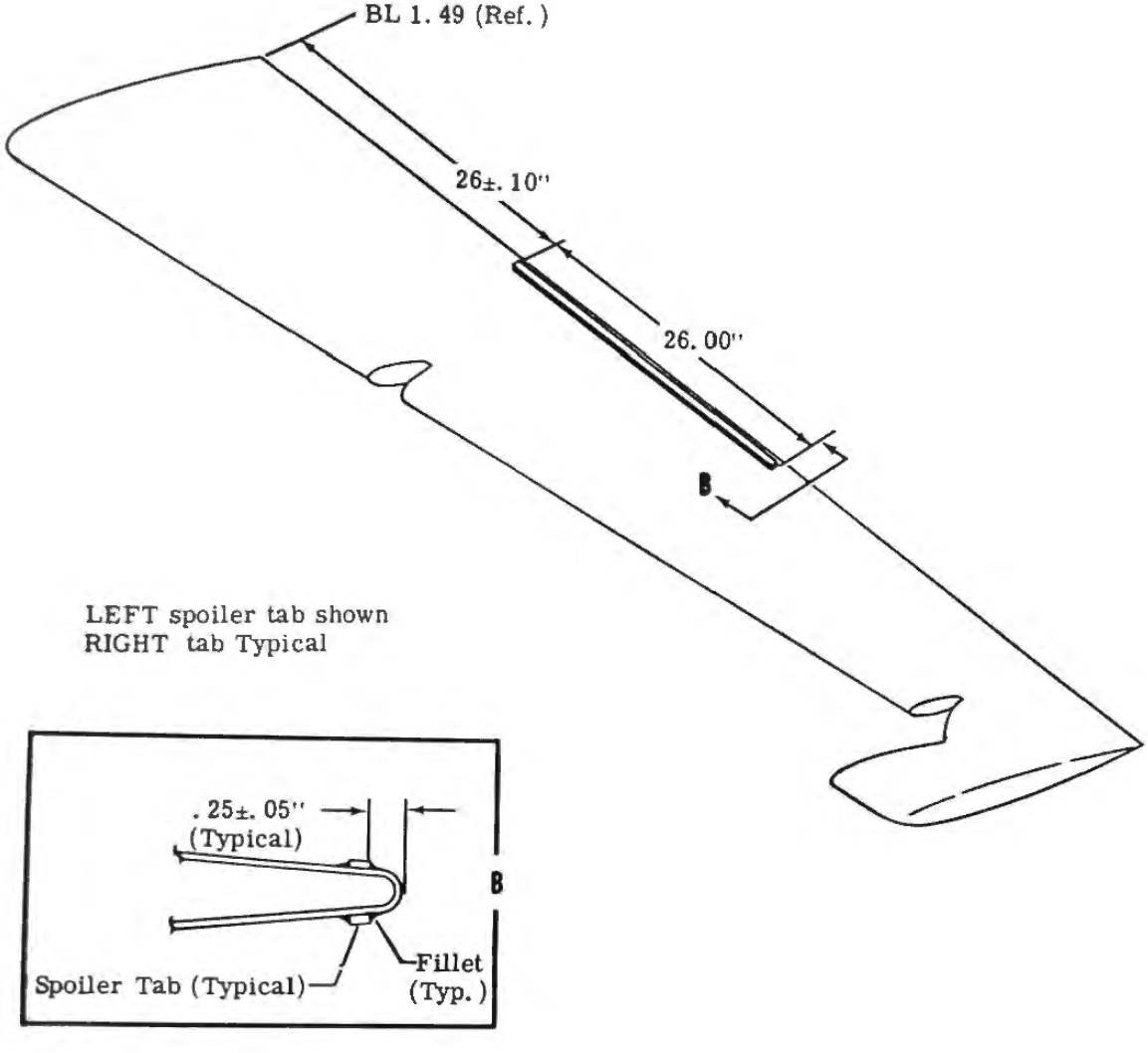

Aircraft 23-003 thru 23-099 except aircraft modified per SK23/24-248.

Figure 2-18. Elevator Spoiler Tab Installation

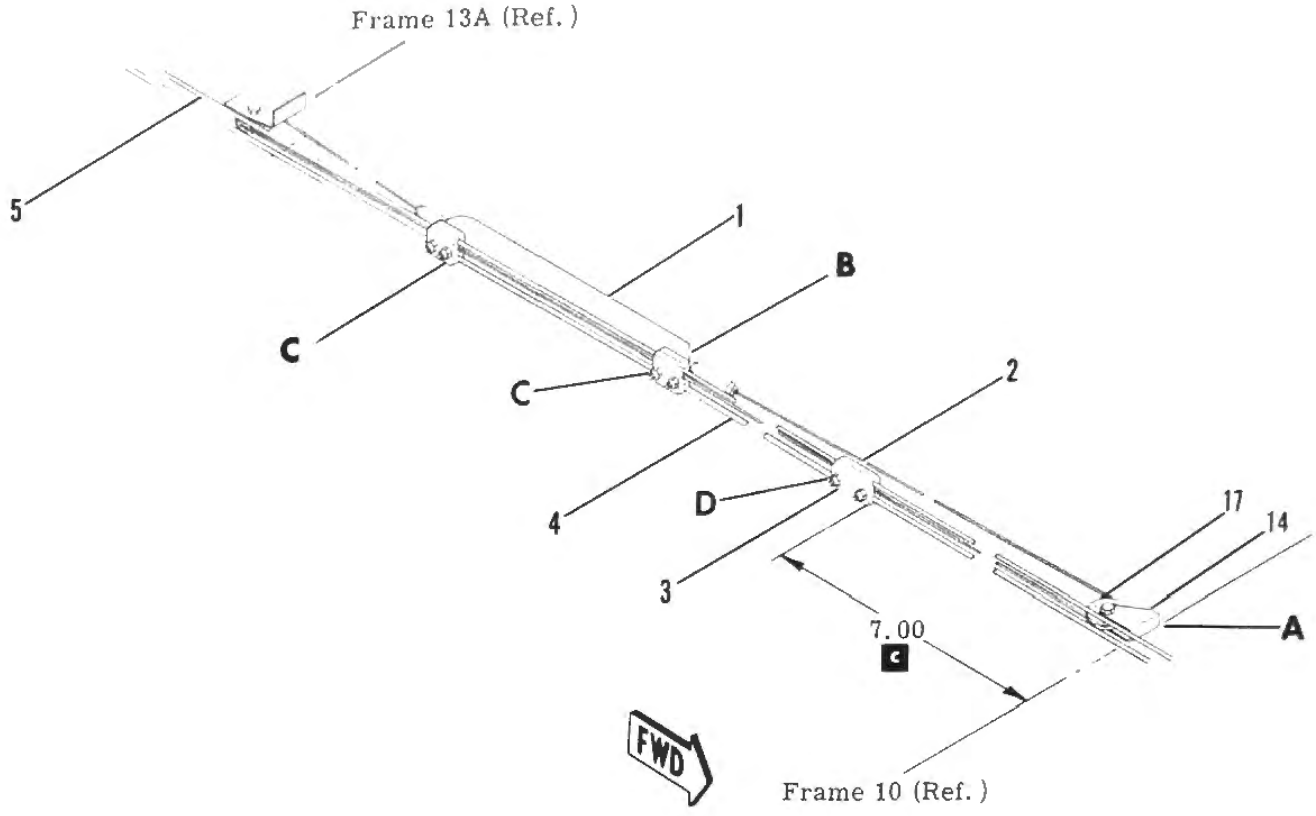

1. Cartridge Assembly
2. Interconnect Cable
3. Cable Clamp
4. LH Rudder Cable
5. LH Aileron Cable
6. Clamp
7. Rod
8. Compression Spring
9. Spring Follower
10. Retainer
11. Nut
12. Terminal Nut
13. Attach Bracket
14. Pulley Bracket
15. Filler
16. Pulley Block
17. Pulley

C Dimension noted is with ailerons and rudder in neutral positions.

Figure 2-19. Aileron-Rudder Interconnect Installation (Sheet 1 of 2)

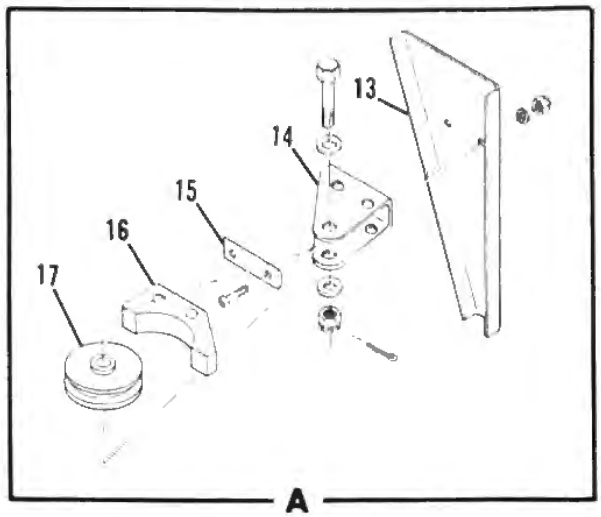

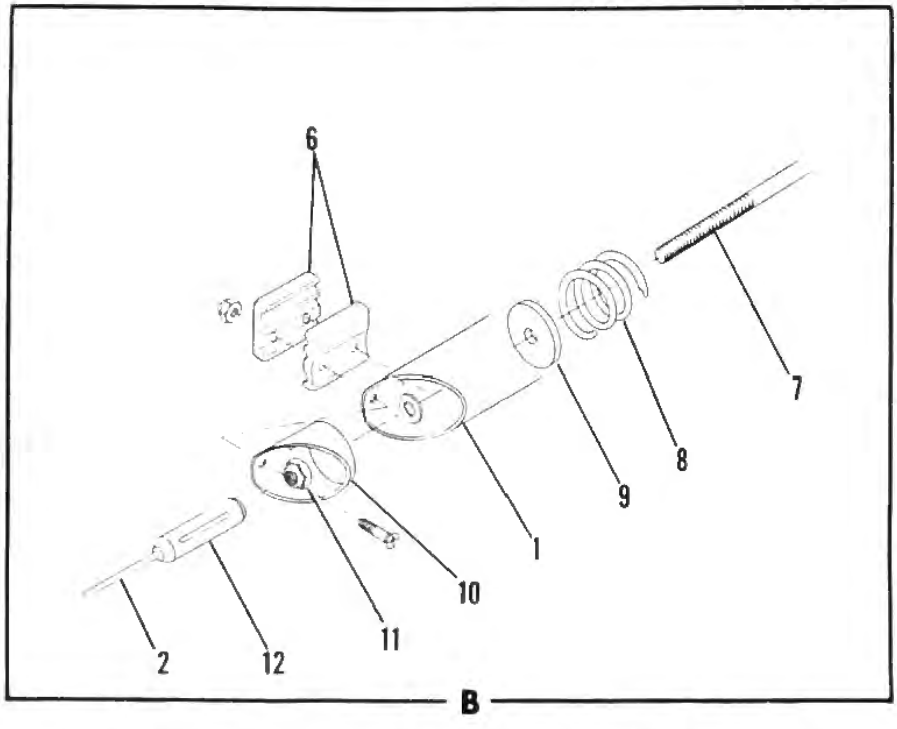

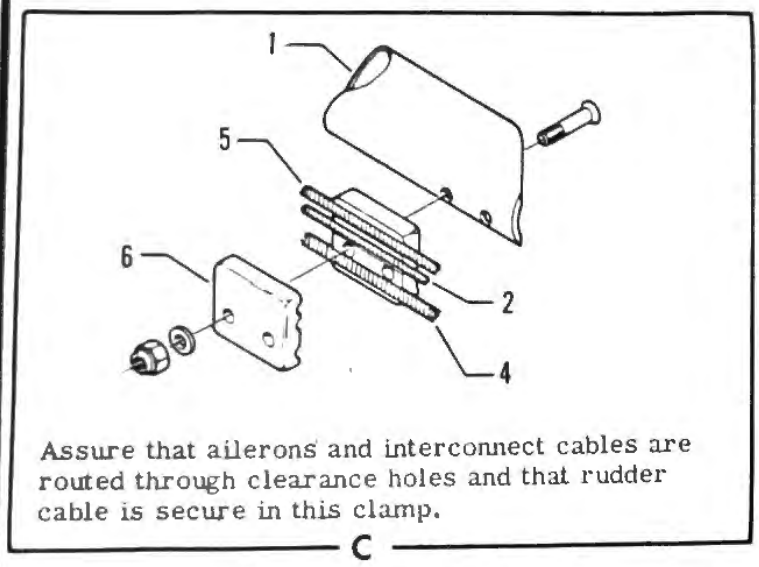

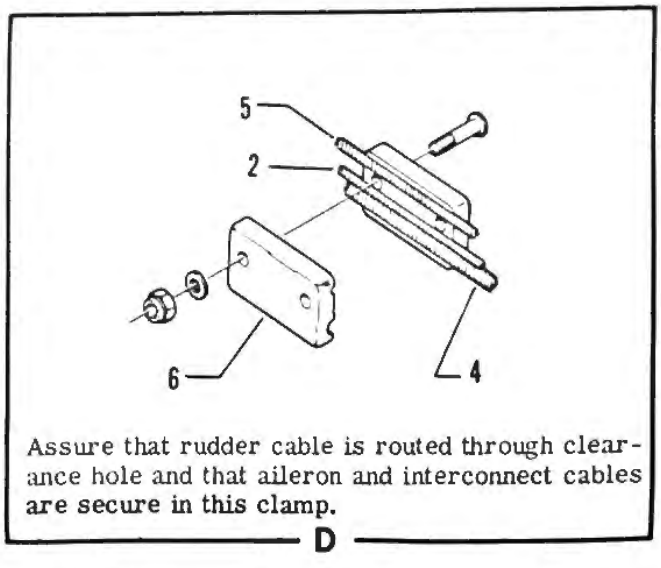

Figure 2-19. Aileron-Rudder Interconnect Installation (Sheet 2 of 2)

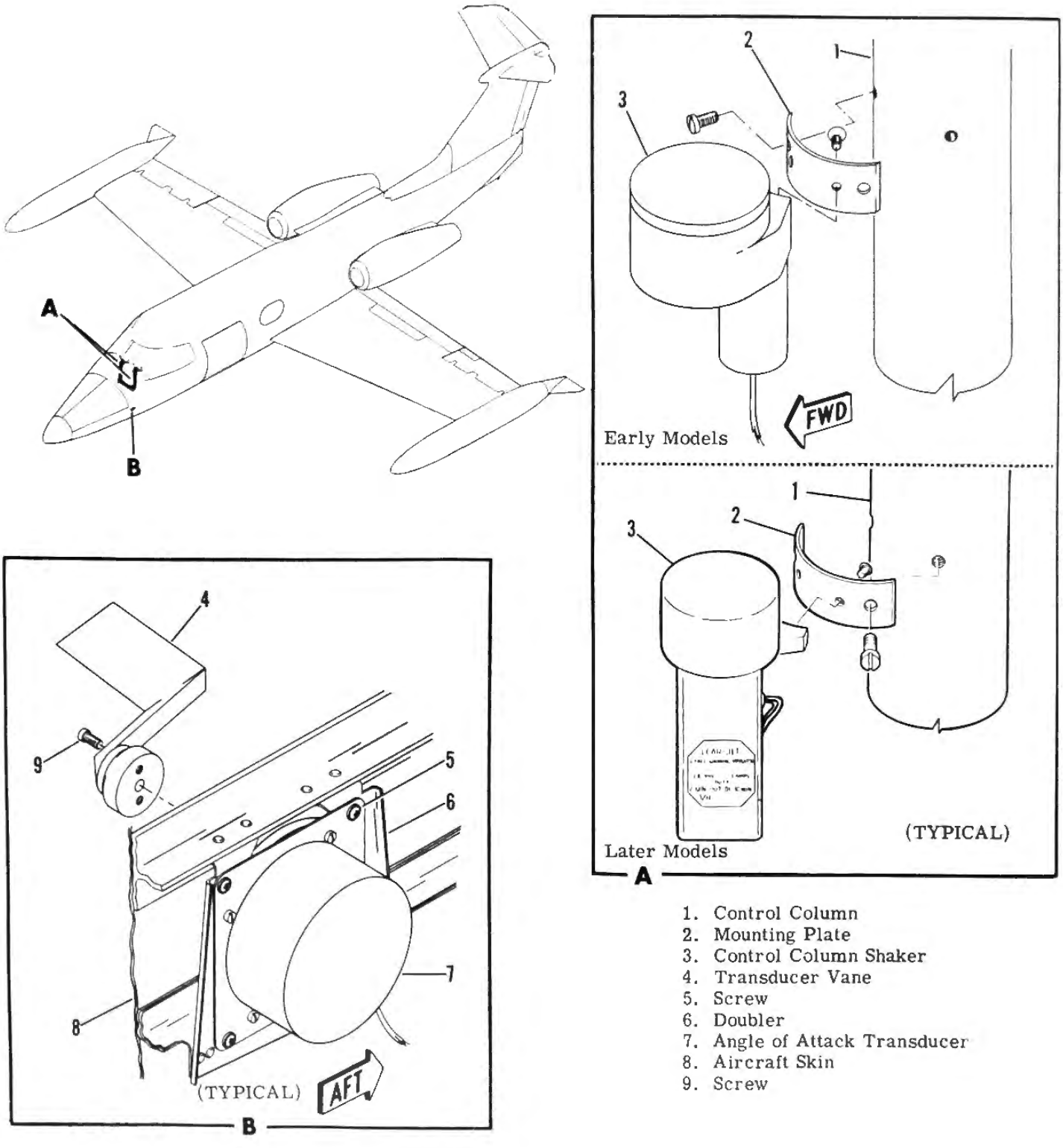

1. Control Column
2. Mounting Plate
3. Control Column Shaker
4. Transducer Vane
5. Screw
6. Doubler
7. Angle of Attack Transducer
8. Aircraft Skin
9. Screw

Figure 2-20. Angle of Attack Transducer and Control Column Shaker Installation

area between frame 5 and 22 is pressurized and houses the crew, passengers, and baggage areas. A large two-piece cabin door is located on the fuselage left side between frames 10 and 13. The fuselage incorporates three large cabin windows; one on the left side and two on the right. The right rear window also serves as an emergency exit. The engine pylons are mounted on both sides of the fuselage between frames 22 and 27.

COCKPIT CENTER PEDESTAL. (See figure 2-21.) The center pedestal, installed between the two crew members, is attached by machine screws to the bottom of the instrument panel and to the floorboards. The pedestal houses the engine thrust levers, wing flaps and spoiler controls, autopilot control head, trim switches and trim indicators, and the parking brake controls.

ADJUSTMENT OF PEDESTAL CONTROL RPM AURAL WARNING SWITCHES [A]. (See figure 2-21.) Inflight adjustment of the cam plate assemblies which actuate the rpm switches is provided by recessed head cam adjustment screws. Insert an allen wrench through the access cutout in the pedestal cover for screw adjustment.

a. Aircraft in flight and gear in the up position.
b. Position thrust levers to 68% (+2%, -3%) as indicated on engine tachometer.
c. Turn cam adjustment screws until aural warning horn sounds from 68% (+2%, -3%) rpm to thrust lever cutoff position.

Note

Position thrust levers and adjust switches individually.

CABIN DOOR. (See figures 2-22 and 2-23.) The door consists of two parts. The upper half hinges up to form a canopy when open. Torsion bar spring assemblies provide opening assistance for the door halves and retain them in the open position. The lower half hinges down and incorporates the cabin access steps. Eight latch pins are installed in the upper door half. Four of the latch pins secure the upper door half to the door frame; two latch pins engage through lower door fittings and secure to the door frame; and the remaining two latch pins lock the two door halves together. An electrical actuator, two hooks, and a torque tube assembly are installed in the lower door half to assist in cabin door closing. After the cabin door is closed and locked, the door hooks should be released prior to takeoff. Two adjustable microswitches, attached to the door frame, energize the DOOR warning light on the readout panel when the door is not closed and locked.

UPPER CABIN DOOR - TORSION BAR ADJUSTMENT. (See figure 2-22.)
a. Open upper and lower cabin door.
b. Remove door panel to gain access to torsion bars.
c. Attach a 12 to 17 pound weight to bottom edge of door.
d. Adjust bolts (15) until door supports the weight specified and remains in the open position.
e. After adjustment is completed, lockwire bolts around legs of angles.

LOWER CABIN DOOR - HOOK ADJUSTMENT. (See figure 2-23.) Adjust forward and aft hooks (21 and 28) so that a 6 to 8 pound force is required for hook rotation.
a. Open lower cabin door and remove upholstery as required to remove access cover.
b. Remove actuator for access to screws (32).
c. Cut lockwire and loosen screws (32) as required to push hooks (21 and 28) down to bottom of door slots.
d. Attach a spring scale to throat of each hook. Pull up on spring scale, while torquing screws (32), until a 6- to 8-pound force is required for hooks to rotate.
e. Lockwire screws by double twist method, reinstall actuator, access doors, and upholstery.

LOWER CABIN DOOR LOCK ACTUATOR ADJUSTMENT. (See figure 2-23.) Adjustment of the door lock actuator mechanism is required if the actuator cycles continuously when locked with the door switch held in the locked position. Adjust actuator and eccentric as follows:
a. Open cabin doors and remove upholstery from lower door step as required for access to screws.
b. Remove lower forward access door.

Note

Hold door switch to locked position until forward and aft hooks, eccentric, and actuator shaft are rotated to the locked position.

c. Remove bolts from door lock actuator and slide forward to disengage actuator from eccentric.
d. Remove screws, outboard attach angle, and actuator.

Note

If a replacement actuator is to be installed, disconnect existing actuator wiring from door switch and connect new actuator wiring. (Refer to Section IX for wiring diagram.) Hold door switch to lock and allow new actuator to rotate to the fully locked position.

e. Assure that eccentric lobe is positioned directly opposite of forward door hook position. Rotate eccentric to correct position as required.
f. Hold door switch to lock to assure that actuator shaft is in the maximum locked position.

[A] Aircraft 23-030 thru 23-099.

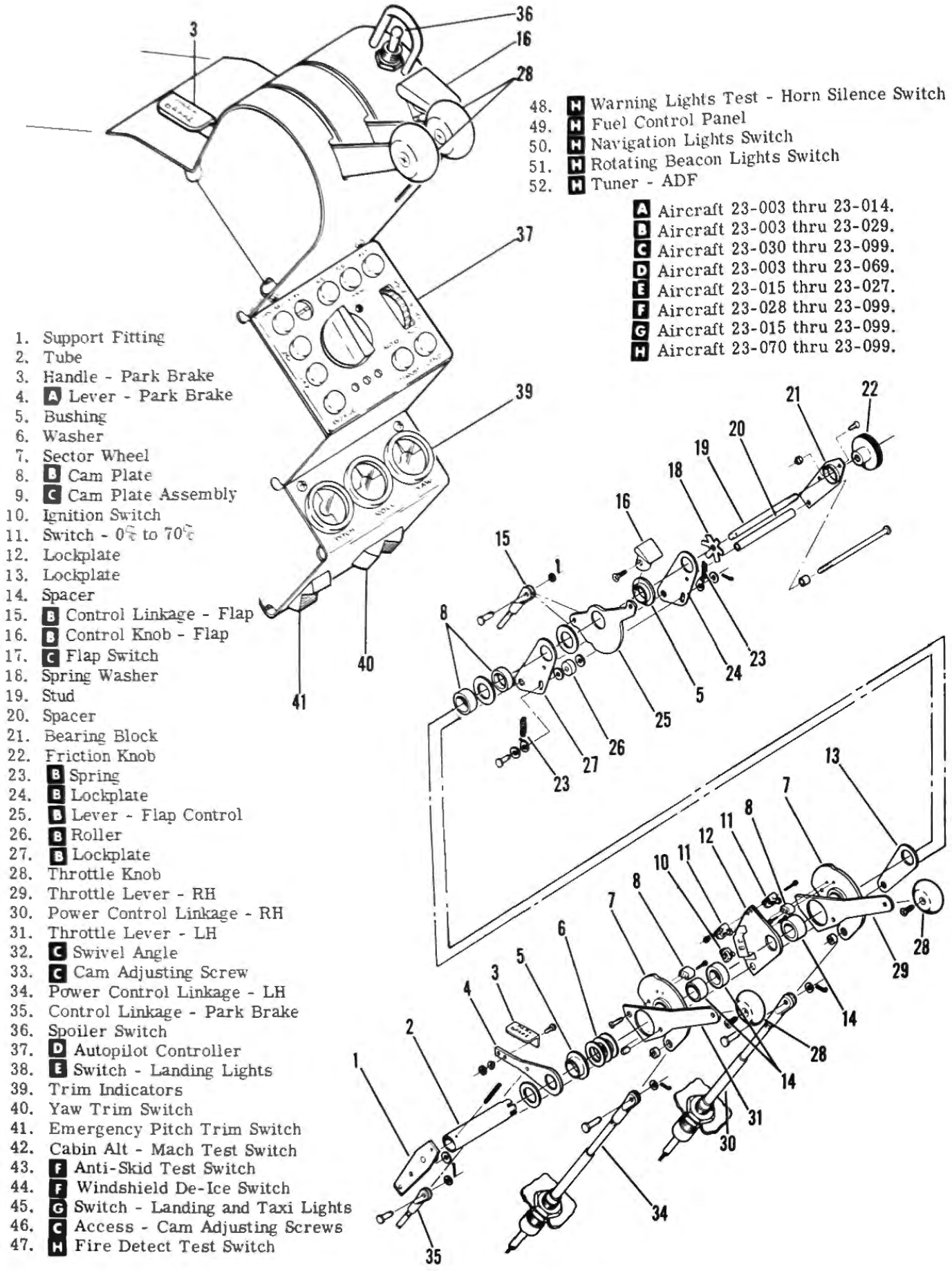

1. Support Fitting
2. Tube
3. Handle - Park Brake
4. A Lever - Park Brake
5. Bushing
6. Washer
7. Sector Wheel
8. B Cam Plate
9. C Cam Plate Assembly
10. Ignition Switch
11. Switch - 0° to 70°
12. Lockplate
13. Lockplate
14. Spacer
15. B Control Linkage - Flap
16. B Control Knob - Flap
17. C Flap Switch
18. Spring Washer
19. Stud
20. Spacer
21. Bearing Block
22. Friction Knob
23. B Spring
24. B Lockplate
25. B Lever - Flap Control
26. B Roller
27. B Lockplate
28. Throttle Knob
29. Throttle Lever - RH
30. Power Control Linkage - RH
31. Throttle Lever - LH
32. C Swivel Angle
33. C Cam Adjusting Screw
34. Power Control Linkage - LH
35. Control Linkage - Park Brake
36. Spoiler Switch
37. D Autopilot Controller
38. E Switch - Landing Lights
39. Trim Indicators
40. Yaw Trim Switch
41. Emergency Pitch Trim Switch
42. Cabin Alt - Mach Test Switch
43. F Anti-Skid Test Switch
44. F Windshield De-Ice Switch
45. G Switch - Landing and Taxi Lights
46. C Access - Cam Adjusting Screws
47. H Fire Detect Test Switch
48. H Warning Lights Test - Horn Silence Switch
49. H Fuel Control Panel
50. H Navigation Lights Switch
51. H Rotating Beacon Lights Switch
52. H Tuner - ADF

A Aircraft 23-003 thru 23-014.
B Aircraft 23-003 thru 23-029.
C Aircraft 23-030 thru 23-099.
D Aircraft 23-003 thru 23-069.
E Aircraft 23-015 thru 23-027.
F Aircraft 23-028 thru 23-099.
G Aircraft 23-015 thru 23-099.
H Aircraft 23-070 thru 23-099.

Aircraft 23-003 thru 23-014

Figure 2-21. Cockpit Center Pedestal and Controls (Sheet 1 of 4)

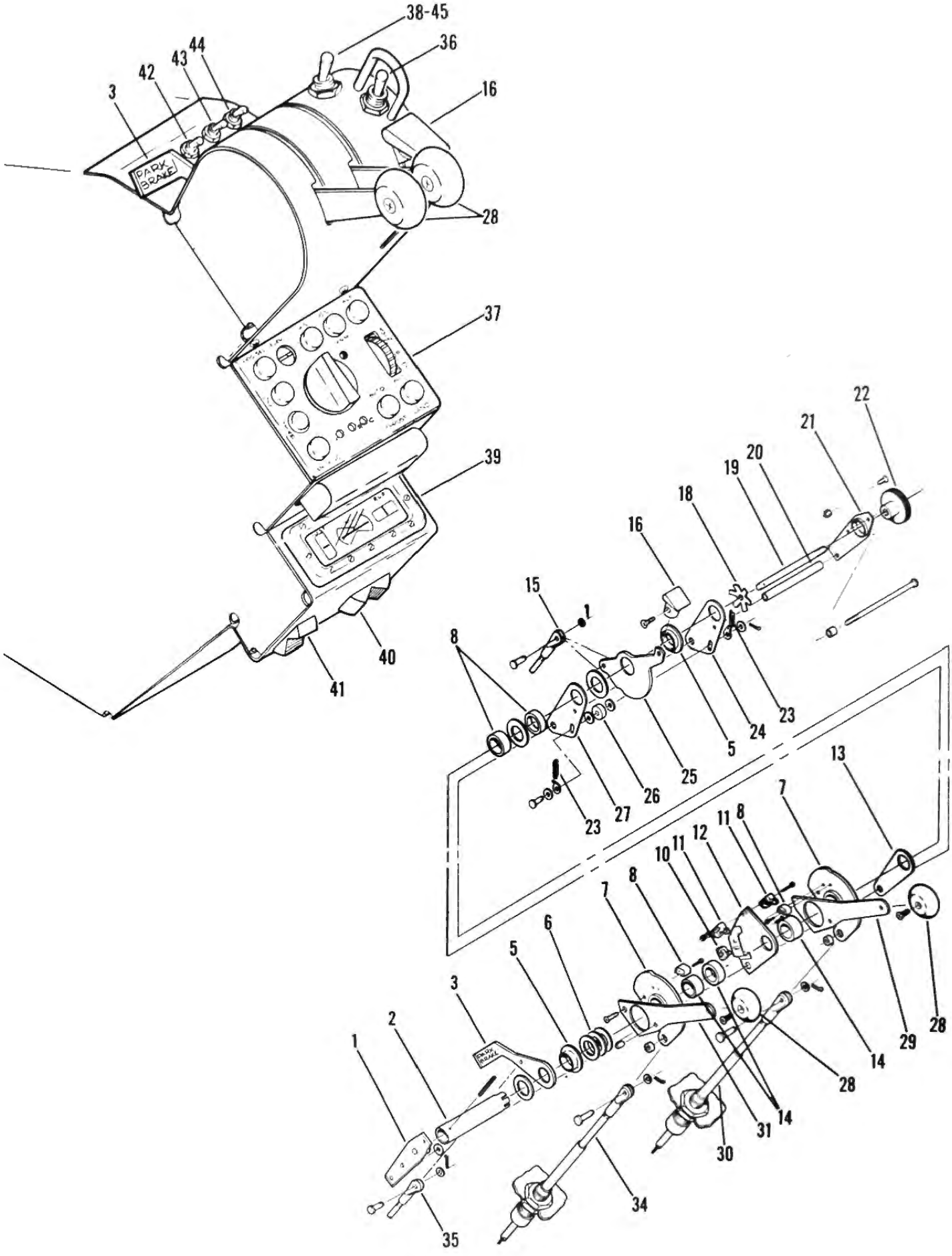

Aircraft 23-015 thru 23-029

Figure 2-21. Cockpit Center Pedestal and Controls (Sheet 2 of 4)

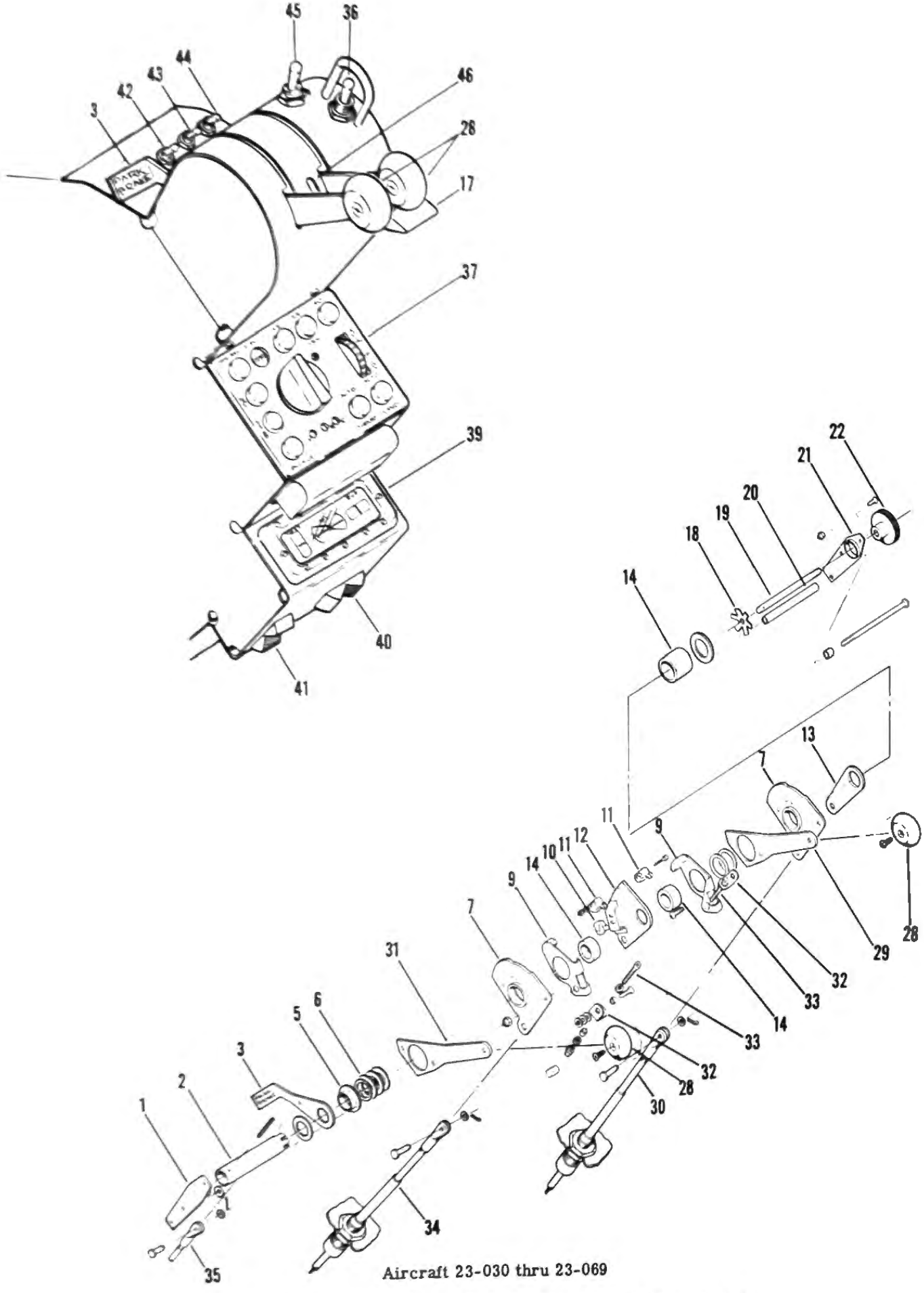

Aircraft 23-030 thru 23-069

Figure 2-21. Cockpit Center Pedestal and Controls (Sheet 3 of 4)

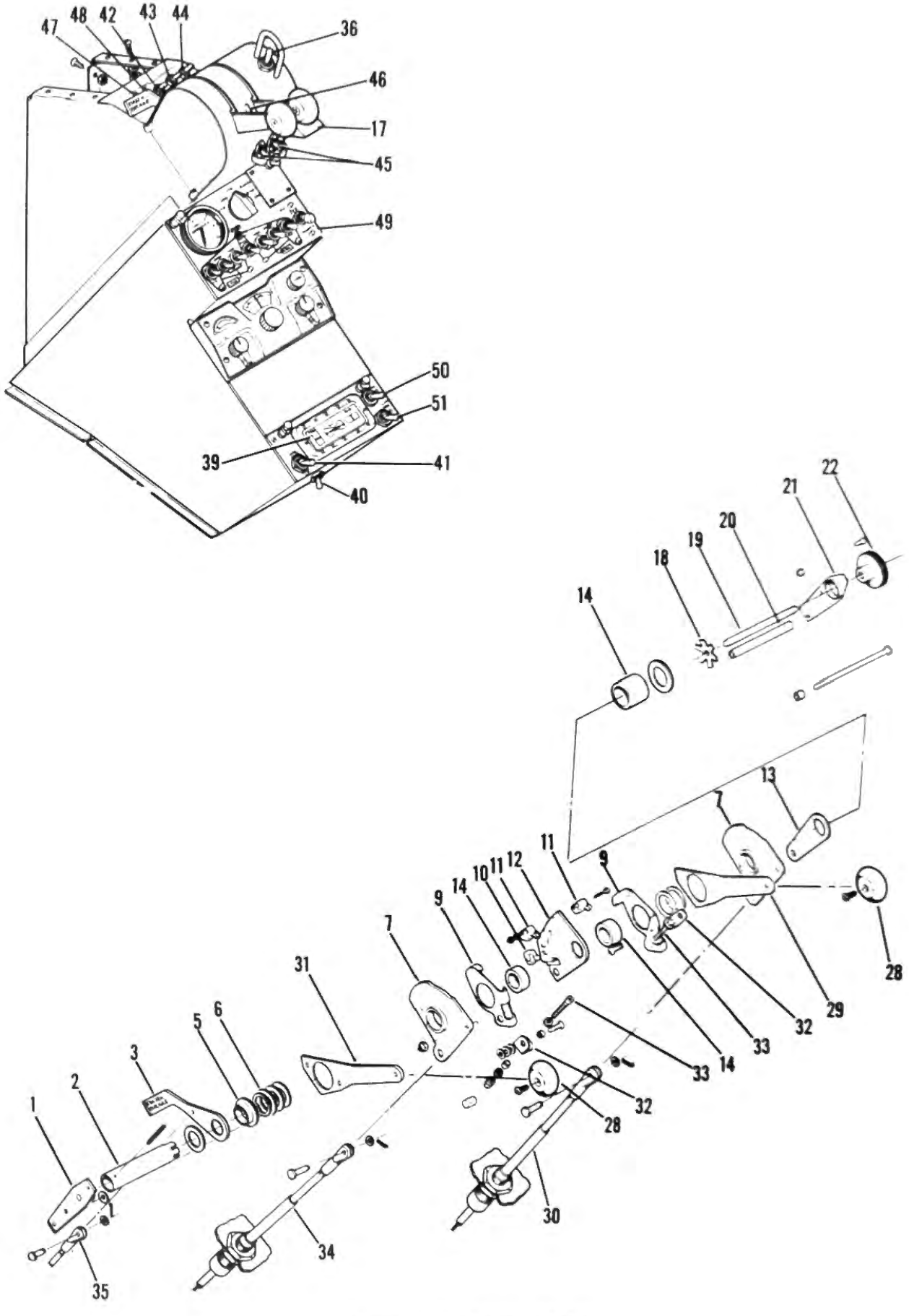

Aircraft 23-070 thru 23-099

Figure 2-21. Cockpit Center Pedestal and Controls (Sheet 4 of 4)

1. Latch Pin
2. Push-Pull Tube
3. Rocker Arm Assembly
4. Handle
5. Rod Control Assembly
6. Bellcrank
7. Link
8. Bellcrank
9. Spring
10. Pin Guide
11. Magazine Rack
12. Latch Pin Inspection Window - Optional
13. Torsion Bar
14. Bearing Plate
15. Bolt - Adjustment
16. Angle
17. Guide Plate
18. Link
19. Arm Assembly

[Q] [1]

[f] Adjust all Push-Pull Tube Rod Ends to obtain 0.20 inch pin clearance.

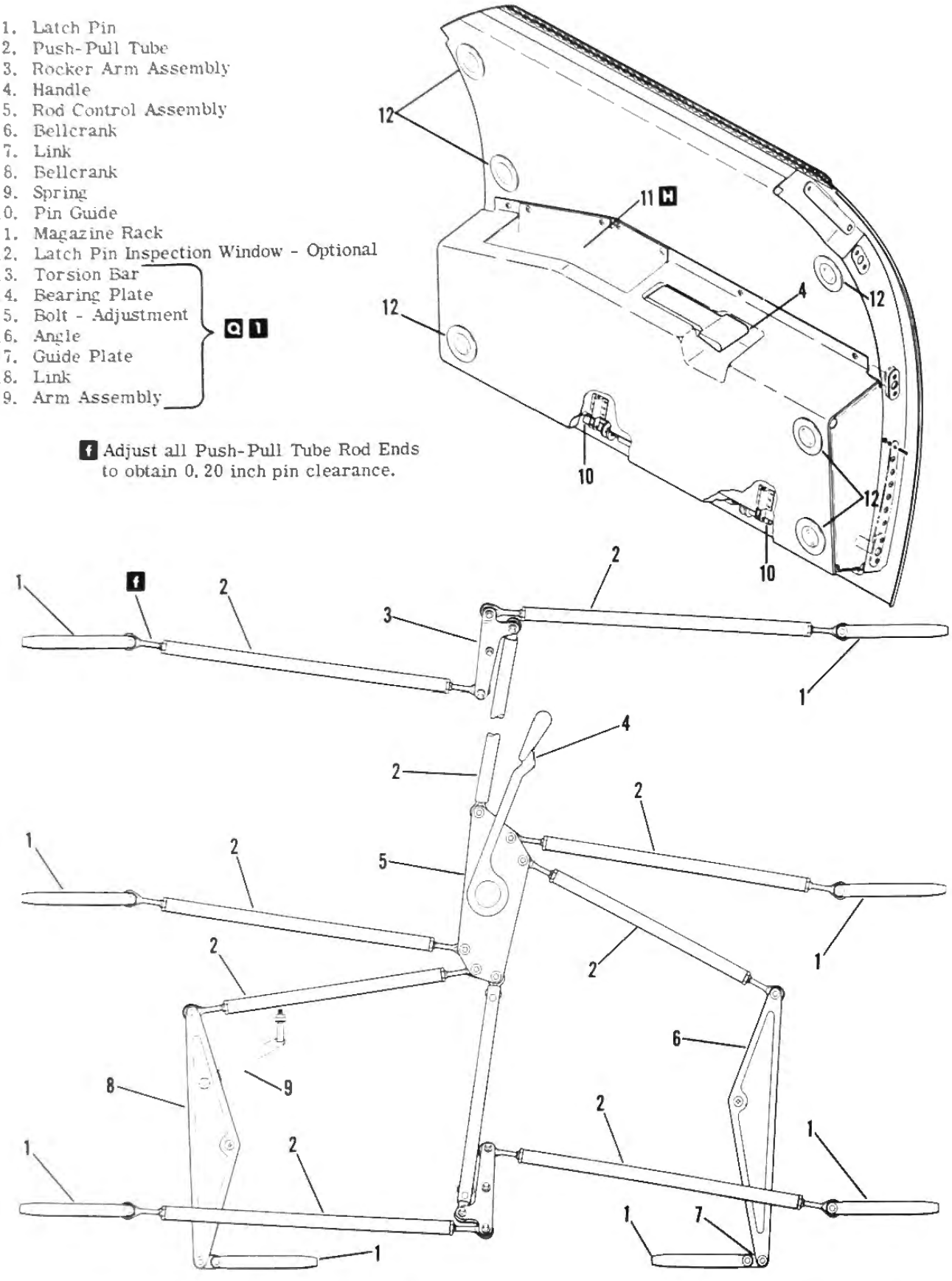

[H] Aircraft 23-015 thru 23-099

[Q] [1] Aircraft 23-060 thru 23-099 and Aircraft Modified per SK23-133.

Figure 2-22. Cabin Door - Upper (Sheet 1 of 2)

Learjet Temporary Service Manual Revision

SERVICE MANUAL AFFECTED: Gates Learjet Models 23 and 24.

FILING INSTRUCTIONS: Insert as listed below and retain until further notice.

Model 23 - File adjacent to page 2-48.
Model 24 - File adjacent to page 2-42.

REASON: To add detail of Upper Cabin Door Mechanism and bolt callout.

INSTRUCTIONS: Add details of door mechanism (Figure 2-22 for Model 23 Aircraft and Figure 2-23 for Model 24 Aircraft) as follows:

* Refer to Section VIII, for inspection interval of Mechanism Assembly and replacement interval of Handle Shaft Bolt.

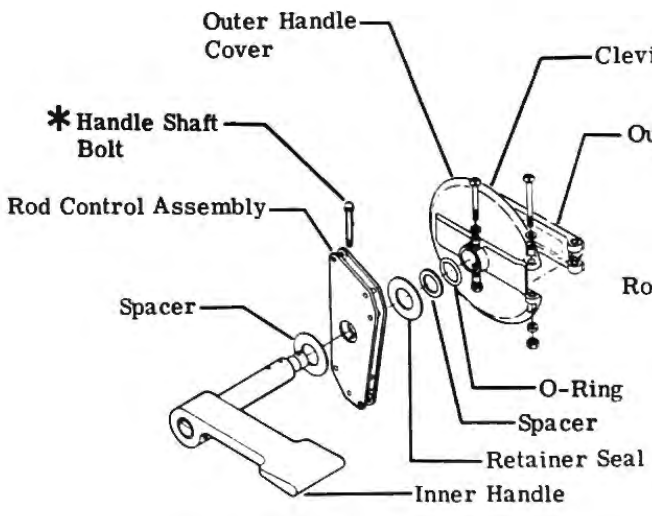

Aircraft 23-003 thru 23-049 not incorporating SK23-114

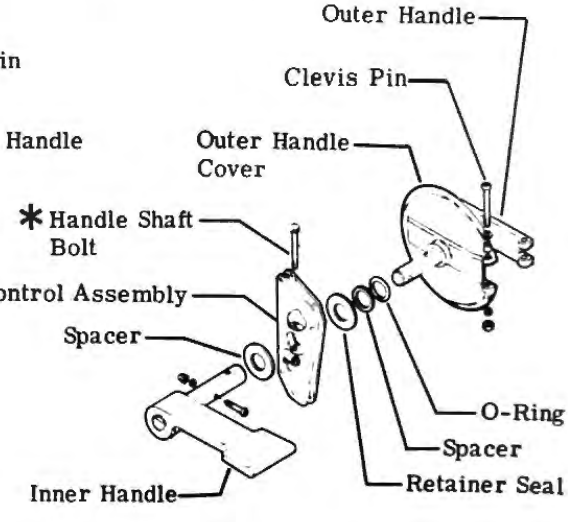

Aircraft 23-003 thru 23-049 incorporating SK23-114, 23-050 thru 23-099 and 24-100 thru 24-180

July 15, 1977

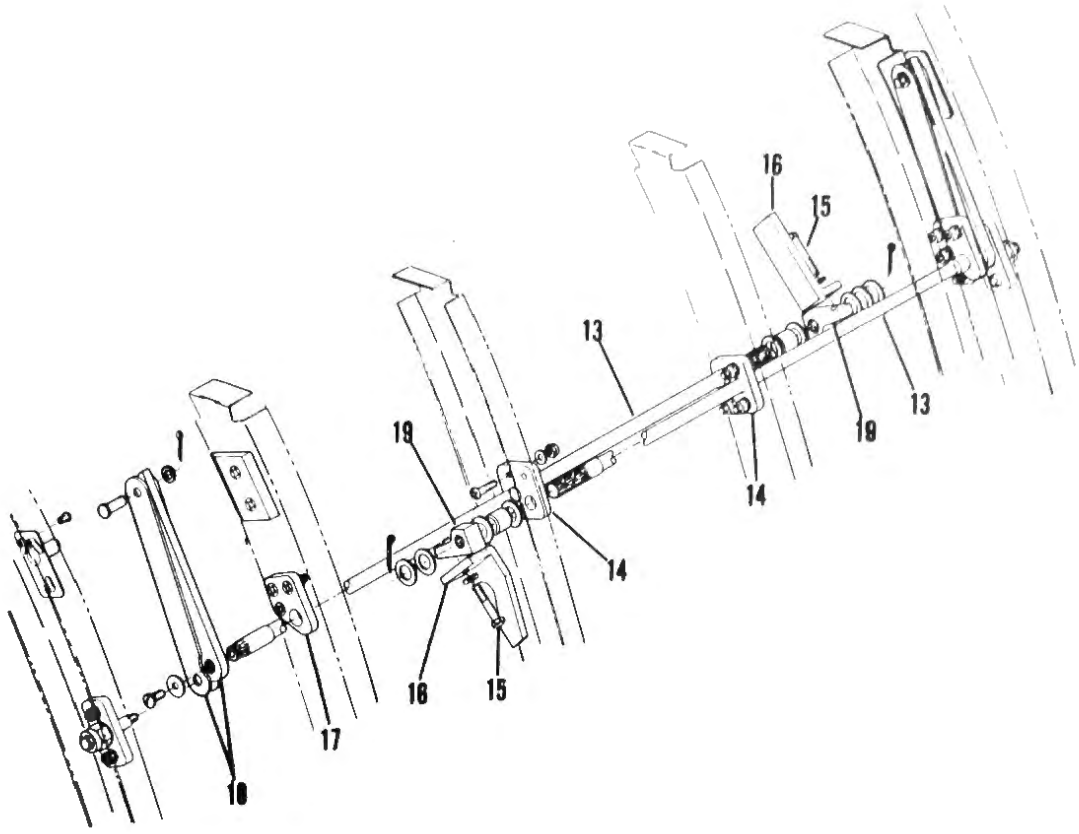

Figure 2-22. Cabin Door - Upper (Sheet 2 of 2)

g. Place actuator flush with and against inboard attach angle and slide shaft into eccentric.

CAUTION

- The backside of actuator must be held flat against inboard attach angle during installation. Tilting the actuator will cause mismatching of shaft to eccentric thereby causing the actuator to cycle continuously when locked.
- Do not adjust electrical limit switches on actuator as internal damage will result.

h. Install actuator and outboard attach angle with screws and bolts.
i. Close cabin doors and hold door switch to the locked position.

Note

Actuator operation should stop when door hooks are engaged.

j. If actuator continues to cycle with door switch in locked position, repeat adjustment procedure, steps a through g. Install access door and upholstery.

CABIN DOOR REMOVAL. (See figure 2-24.)

CAUTION

Prior to installation of new cabin door, the aircraft must be resting on landing gear and the engines installed.

a. To gain access to work area:
   1. Remove the left service cabinet. In addition, the refrigeration system must be disconnected at the quick-disconnects, the evaporator drain line loosened, and all wiring disconnected.
   2. Remove the upholstery panels as required from around the door frame. The panels are held in place with pop rivets and/or screws. The rugs are glued in position.
b. To remove the upper door:
   1. Remove the inner skin from around the door frame.
   2. Clear foam from around upper door hinge and fuselage frame pin guides using a sharp knife or other suitable instrument.
   3. Disconnect electrical wiring from the door. The switch box assemblies along the lower edge of the door are the only electrically operated devices on the upper door. Pull wiring from door, through the weld assembly, into the cabin area and tag to assist in reinstallation.

1. Torsion Bar Assembly
2. Bolt
3. Spring
4. Housing - Secondary Latch
5. Roll Pin
6. Spring - Secondary Latch
7. Retainer - Secondary Latch
8. Pin - Fwd
9. Turnbuckle
10. Tube
11. Bellcrank
12. Pin - Aft
13. Plate
14. Pin Guide
15. Retaining Ring
16. Shaft
17. Handle
18. [C] Actuator - Door Lock
19. [D] Actuator - Door Lock
20. Plate - Retention
21. Hook - Fwd
22. Bearing
23. Bearing Block
24. Eccentric
25. Eccentric Assembly
26. Torque Tube
27. Spring Washer
28. Hook - Aft
29. Switch Assembly
30. [E] Door Stop
31. [G] Door Stop
32. Screw
33. [F] Bracket
34. [F] Pulley
35. [F] Knob and Cable Assembly
36. [F] Hook Assembly
37. [F] Pulley Support
38. [F] Cable Assembly
39. [F] Stop
40. [F] Plate
41. [F] Reel Assembly
42. [D] Screw
43. [D] Bolt
44. Bushing

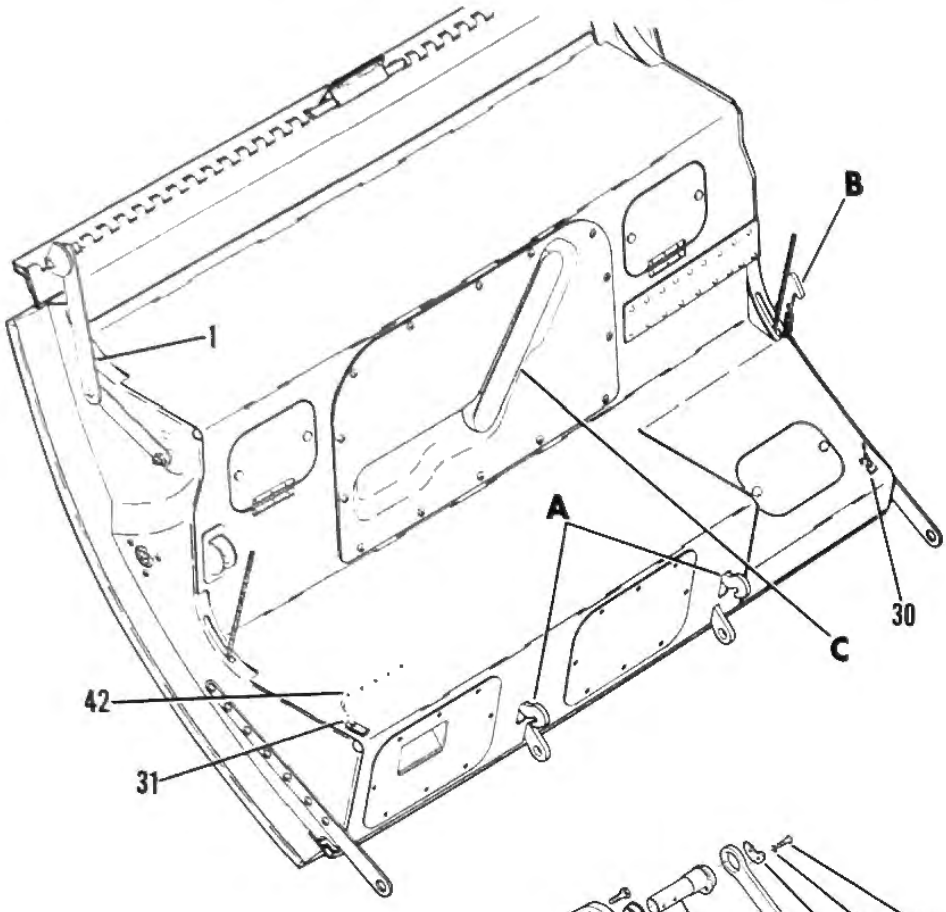

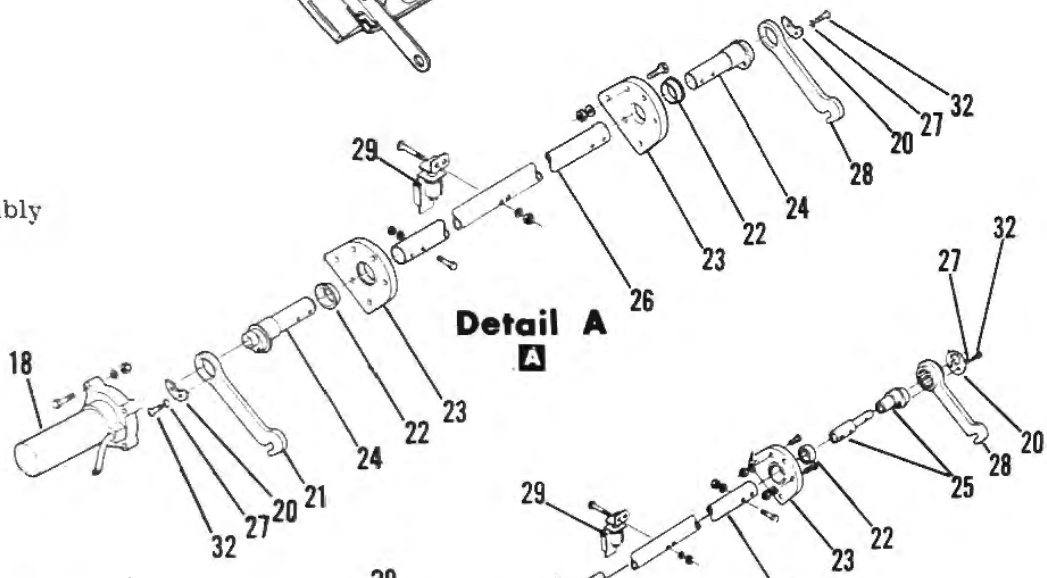

Note

Torque plates (20) so that hook rotation requires 6 to 8 pounds force.

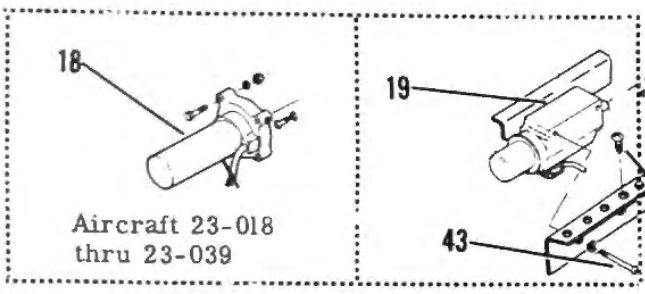

[A] Aircraft 23-003 thru 23-017.
[B] Aircraft 23-018 thru 23-099
[C] Aircraft 23-003 thru 23-039.
[D] Aircraft 23-040 thru 23-099.

[E] Aircraft 23-003 thru 23-029 except 23-028A
[F] Aircraft 23-030 thru 23-099 and 23-028A
[G] Aircraft 23-003 thru 23-029 when modified by SK23-117.
[H] Aircraft 23-003 thru 23-099 not modified by AMK74-2.
[I] Aircraft 23-003 thru 23-099 when modified by AMK74-2.

Figure 2-23. Cabin Door - Lower (Sheet 1 of 2)

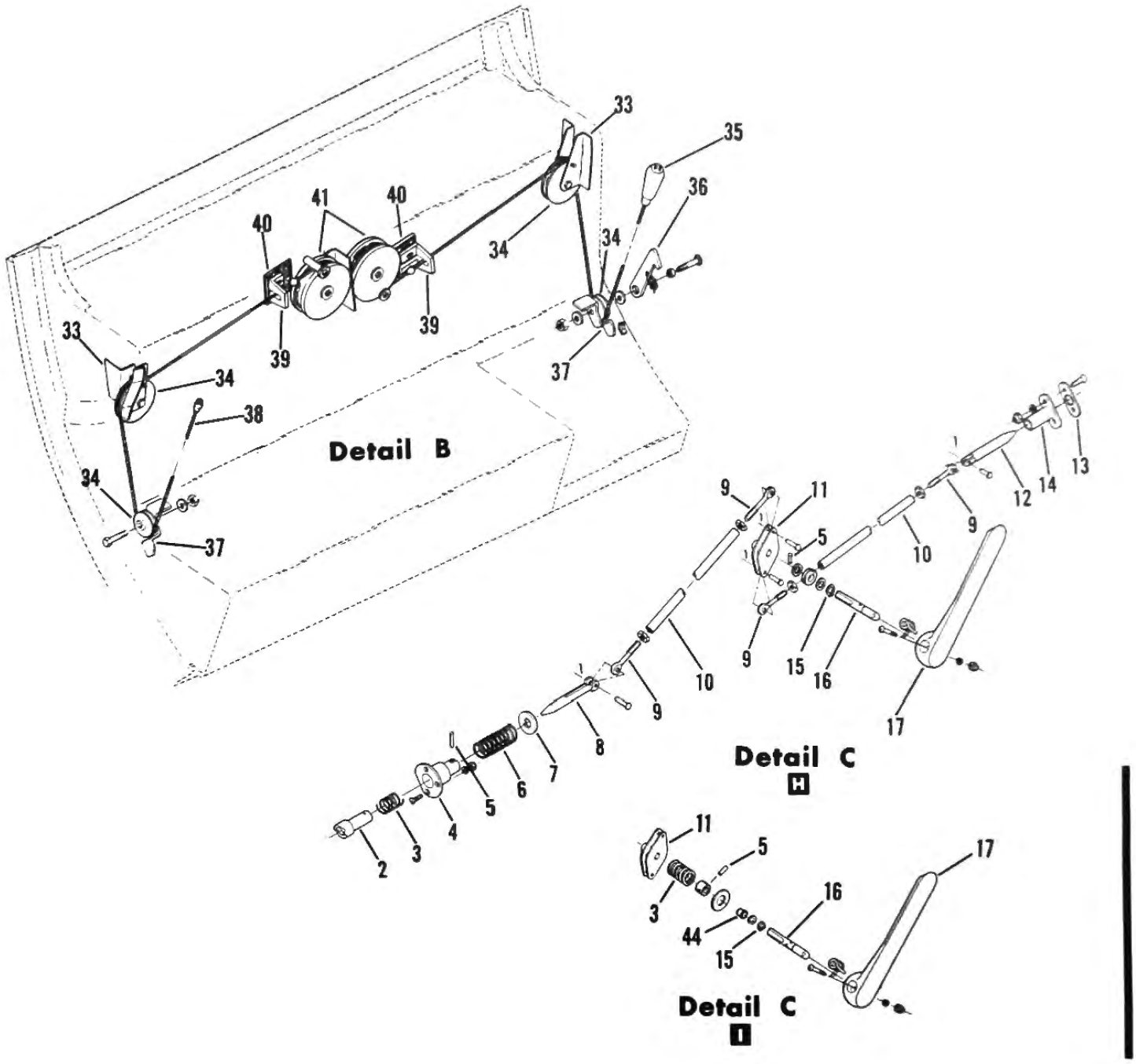

Figure 2-23. Cabin Door - Lower (Sheet 2 of 2)

4. Release tension on torsion bar assembly.

Note

See UPPER CABIN DOOR - TORSION BAR ADJUSTMENT, this section.

5. (See Detail H.) Remove torsion bar attach fittings from door frame.
6. (See Detail C.) Drill out rivets and remove upper door and hinge assembly from the aircraft.

c. To remove the lower door:

1. Remove floorboards as required to gain access to the lower door hinge area.
2. Clear foam from around lower door hinge area and fuselage frame pin guides using a sharp knife or other suitable instrument.
3. Disconnect electrical wiring from the door. The actuator is the only electrically operated device in the lower door. Pull wiring from door, through the weld assembly, into the cabin area. Tag wiring to assist in reinstallation.
4. Disconnect torsion bar from lower door.
5. Disconnect cables from fuselage frame.
6. Drill out rivets and remove lower door and hinge assembly from the aircraft.

CABIN DOOR INSTALLATION. (See figure 2-24.)

a. Preparation of door frame prior to installing new door:

1. (See Detail A.) Drill out rivets and remove pin guides and plates from aircraft. Tag for reinstallation.
2. Remove old door seal and thoroughly clean around door frames.
3. Remove weld assembly from upper fuselage structure.
4. (See Detail B.) Fabricate doublers in accordance with dimensions shown. Install doublers over holes created by removal of door frame pin guides on the forward side of frame 10 and the aft side of frame 13.

b. (See Detail C.) Position new hinge assembly on tee stringer and temporarily attach to check hole alignment. After check, remove hinge, apply faying surface seal on tee stringer, and install new hinge.

Note

See APPLYING FAYING SURFACE SEAL, this section.

c. (See Detail D.) Slip door jamb extrusion on new door assembly then fit into hinge and door opening. The door frame extrusion and the door jamb extrusions must mate properly. Adjust the door jamb extrusion to insure a good mate then, using the pilot holes in the door skin as a guide, drill three holes through the door jamb extrusion. Space holes along the length of the door jamb extrusion and cleco to prevent extrusion from moving and remove door from aircraft.

d. (See Detail D.) Drill remaining holes through the door jamb extrusion. Remove extrusion, apply faying surface seal on both sides, then reinstall and secure with rivets.

e. Position assembled door on opening and into the hinge half. Make sure the door is fitted into the hinge as far as possible.

f. (See Detail D.) Draw a line on the door skin using the edge of the hinge as a guide. Remove door and trim upper edge as required to insure an equal distance is obtained between the penciled line and the upper door edge.

g. (See Detail C.) Position door assembly and doubler into hinge and drill attach holes using the hinge as a guide. Apply faying surface seal to both sides of upper edge of door and attach door to hinge with rivets.

h. (See Detail D.) With door closed, draw line on side of fuselage corresponding to lower edge of door. Open door and support in this position.

Note

If a lower door is also being installed, proceed with installation before performing any additional work on the upper door.

i. (See Detail D.) Close lower door. Draw a line on the side of the fuselage corresponding to upper edge of door. The minimum clearance between this line and the line marked in step h must be .10 to .15 inch. Trim lower edge of upper door until this clearance is attained.

j. Install new door seal around door opening as follows:

1. Position new seal around opening, mark, and cut as required.
2. Thoroughly clean seal application area with acetone or other suitable solvent.
3. Apply a coating of silastic 140 adhesive (manufactured by Dow Corning) around door opening in the area where the seal will be installed.
4. Install seal. Apply adhesive to all seal joints.
5. Allow adhesive to dry. Refer to manufacturer's specification for dry time.

k. With upper and lower door closed, adjust hook assembly. Refer to LOWER CABIN DOOR HOOK ADJUSTMENT, this section.

l. After adjustment, close doors and actuate hook assembly. Clearance between upper and lower doors should not exceed .04 inch. Clearance can be obtained by adjusting, adding, or removing washers to clevis assembly. Assure door contour matches fuselage contour; maximum mismatch of .04 inch is allowable.

m. Locate and install torsion bar linkage as follows:

1. (See Detail E.) Fabricate two small punches in accordance with dimensions shown. Insert punch in torsion bar link (both sides).
2. (See Detail F.) Close upper cabin door and fold link into contour of door.
3. (See Detail F.) Insert a screwdriver between punch and door structure and mark location on door frame for torsion bar link holes.
4. Open door and remove punch from link assemblies.
5. (See Detail G.) Step drill holes through the door frame. The hole in the forward frame must be moved up .15 inch along the contour prior to drilling. The hole in the aft frame must be moved up .10 inch. The final enlargements of the 5/8-inch hole should be made using a spotface. This will provide a good clean hole.
6. (See Detail H.) Install fittings in door frame. Using the holes in the fittings as a pattern, drill holes through frame structure.
7. Position fitting assemblies through door frame and secure with attaching hardware. Close cabin door and position torsion bar link assembly as shown in detail F. This can be accomplished by loosening the fitting pin and rotating it as required.
8. Secure link assembly to fitting with attaching hardware.
9. Adjust torsion bar assembly. Refer to UPPER CABIN DOOR - TORSION BAR ADJUSTMENT, this section.

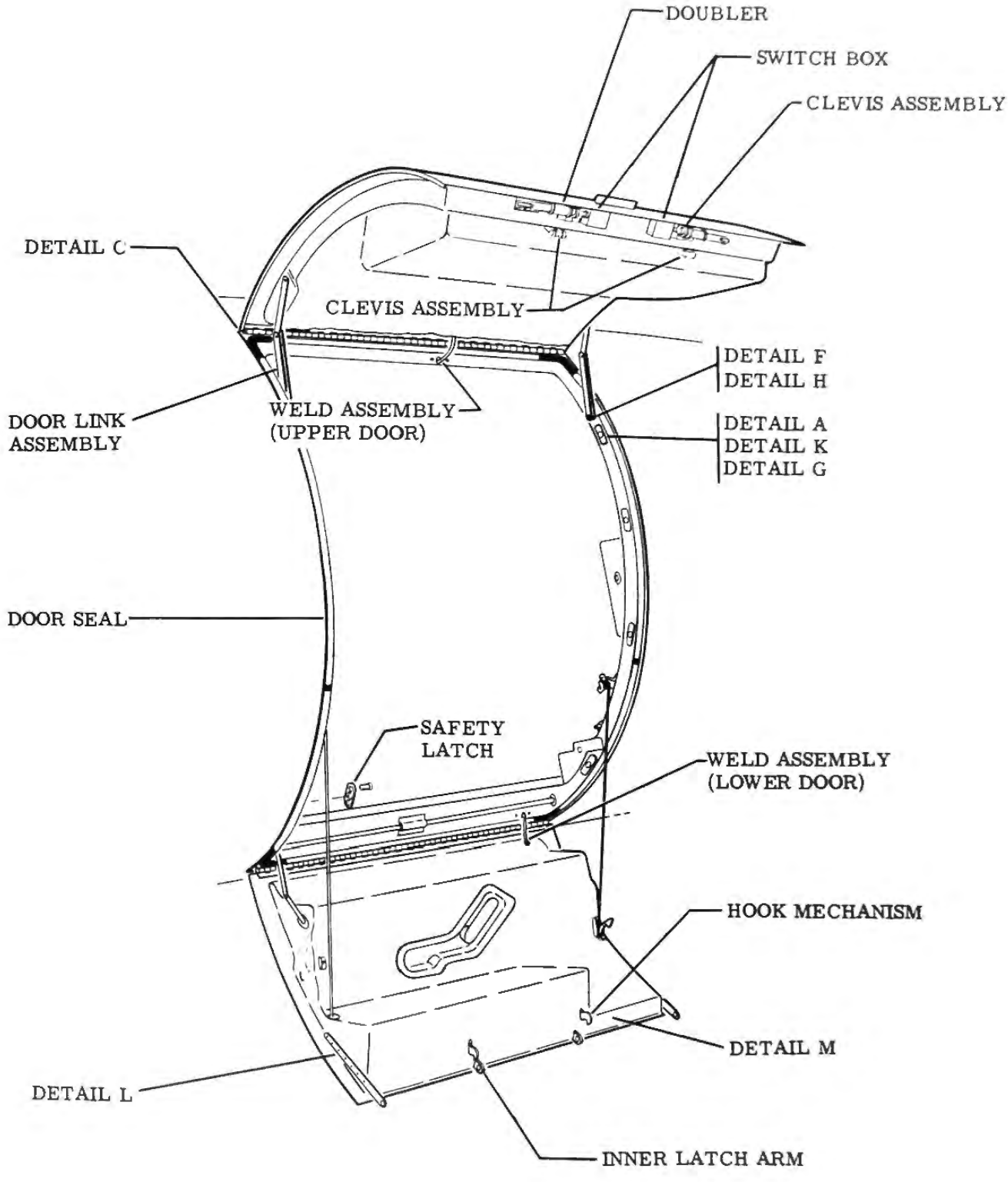

Figure 2-24. Cabin Door Removal and Installation (Sheet 1 of 3)

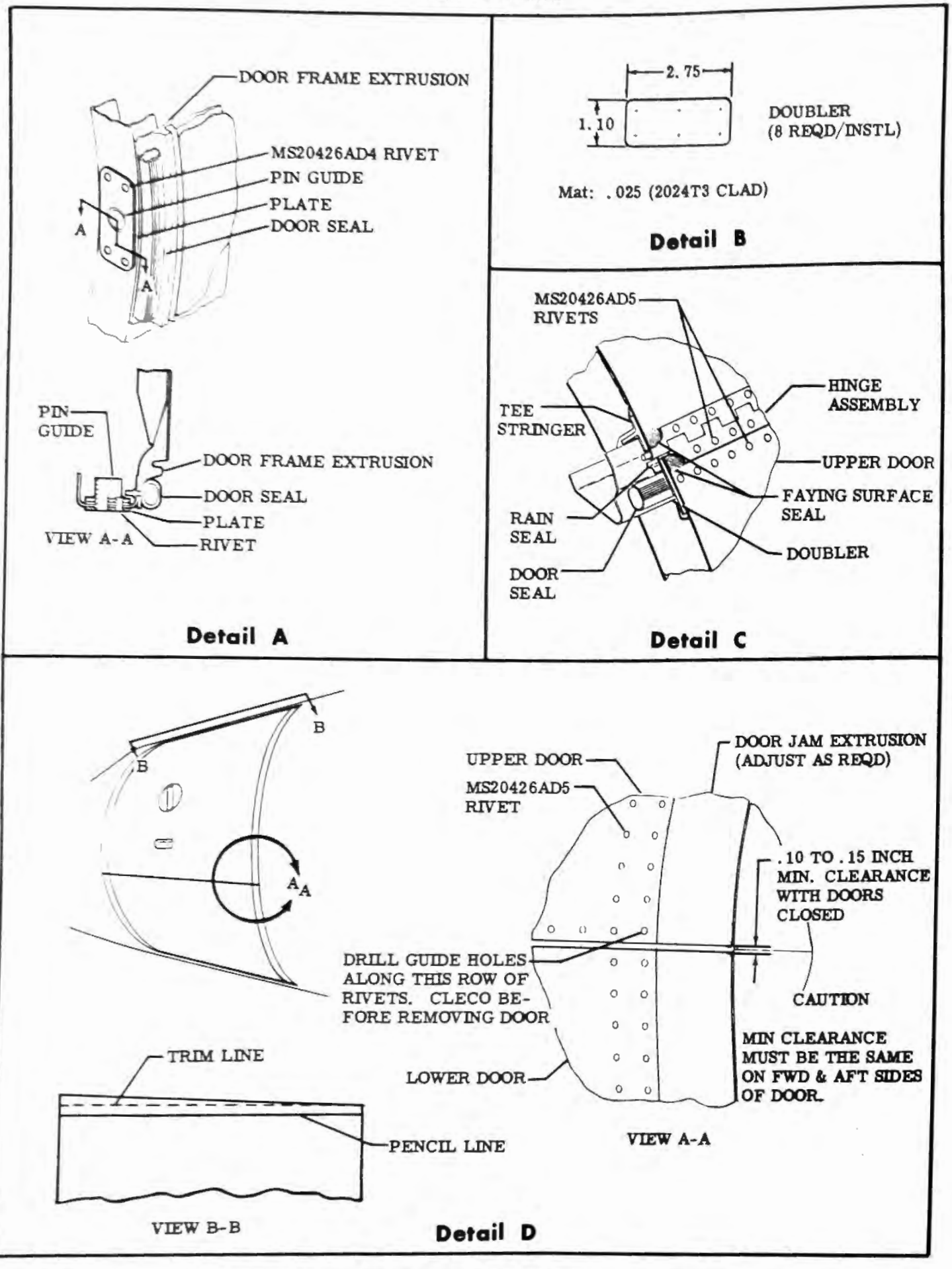

Figure 2-24. Cabin Door Removal and Installation (Sheet 2 of 3)

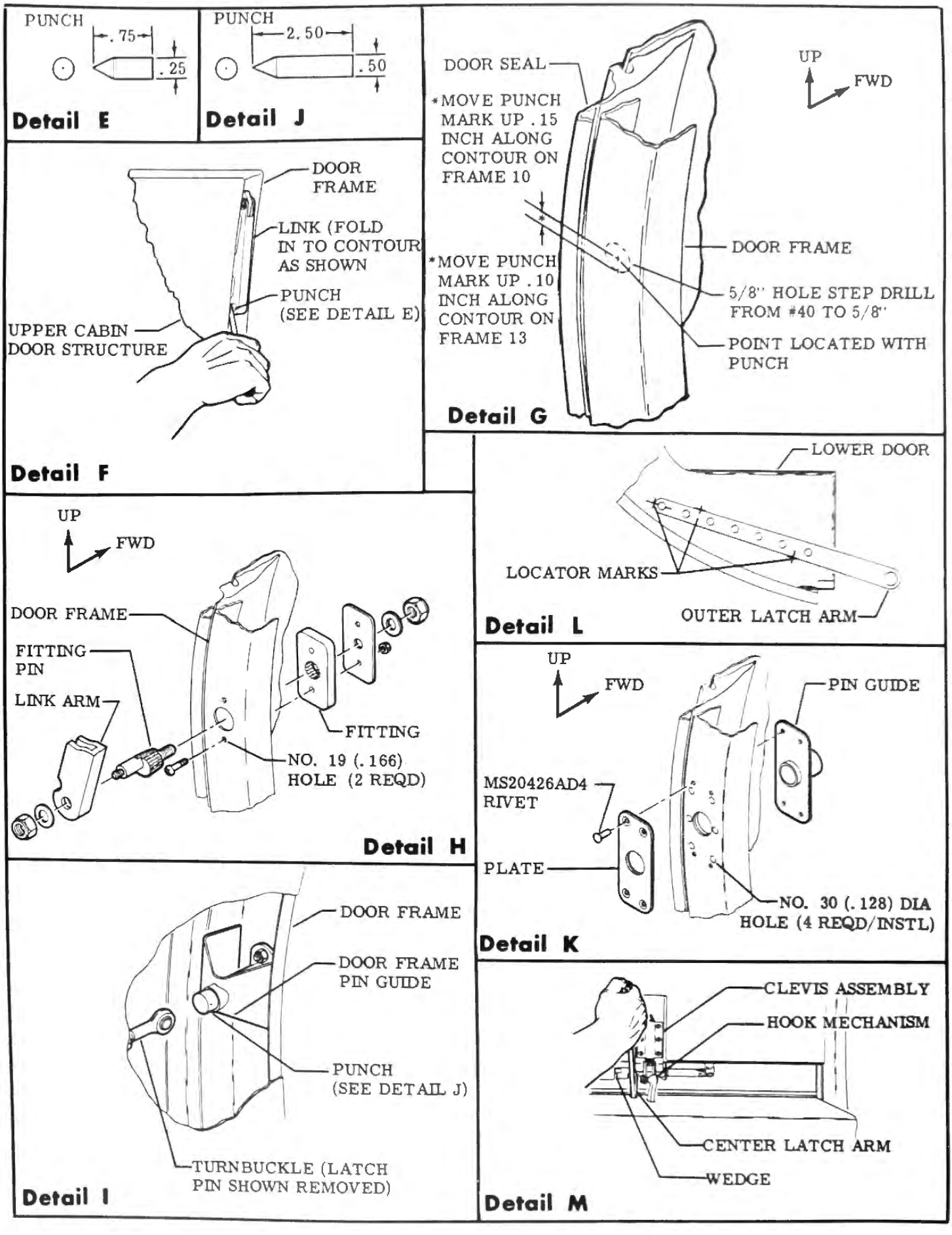

Figure 2-24. Cabin Door Removal and Installation (Sheet 3 of 3)

n. Locate and install upper door pin guides as follows:

1. (See Detail I.) Disconnect and remove latch pins from turnbuckles on upper door.
2. Close cabin doors using actuator to assure doors are properly closed.
3. (See Detail J.) Fabricate a punch in accordance with dimensions shown.
4. (See Detail I.) Install punch in door pin guide and mark the location of holes in the door frame.
5. (See Detail K.) Open door and drill holes through frame. The holes should be step drilled starting with a #40 and enlarged to 5/8 inch. The final enlargements should be accomplished using a spotfacer. This will insure a good clean hole.
6. (See Detail K.) Position pin guide on door side of door frame and using holes in pin guide as a template, drill two holes through frame (opposite corner holes). Secure pin guide to frame with clecos.
7. (See Detail K.) Drill remaining holes. Secure plate and pin guide to frame with rivets.
8. (See Detail L.) Install latch pins on turnbuckles in upper door, close upper door and lock into position using the actuator in the lower door. Check pin operation; the pins should lock into the frame by exerting very little effort on the handle—very little effort being a one-finger operation.

o. Locate and install center latch arm as follows:

1. (See Detail M.) Close doors, lock into position, and insert center latch arms into upper door latch arm guides allowing latch arm to hang loose in lower door.
2. Using existing holes in latch arms as a pattern, mark position of lower hole on door structure.
3. Remove latch arm and drill hole through structure.
4. Reposition latch arm in lower door and secure with screw, washer, and nut.
5. (See Detail M.) Force a screwdriver between each latch arm and eccentric assembly until the lower door is pulled in flush with the upper door. In this position, mark remaining holes on door structure.
6. Remove screwdriver and latch arms. Drill remaining holes in door structure.
7. Install latch arms and secure with screws, washers, and nuts.
8. (See Detail M.) Tape wedges on lower part of upper cabin door and close door. The wedges should strike the lower door center latch arms and assist in alignment with the pins. The wedges must be adjusted up or down to prevent forcing the center of the door out.
9. With the wedges in the proper position, mark and drill holes through upper door structure to match holes in wedges and secure to door.

p. Locate and install outboard latch arms as follows:

1. Close doors and lock into position with outboard latch arms temporarily installed.
2. (See Detail L.) With the doors closed and locked in position, the loose end of the latch arm will rest against the lower door jamb. In this position, mark two or three locator lines on door structure and latch arm.
3. (See Detail L.) Open doors and reposition latch arms. With locator lines properly aligned and using existing holes in latch arm as a pattern, mark position of holes on the structure.

CAUTION

Because latch arm hole alignment is critical, only the lower hole in the door structure should be drilled. If the pin and latch arm do not align properly when the door is closed, remove bolt and repeat step p. 3 using adjacent hole.

4. Remove latch arm and drill lower hole in door structure. Secure latch arm to structure with screw, washer, and nut.
5. Close doors and lock into position. Check ease of closing with outboard latch arms installed.
6. If closure is satisfactory, open doors, drill remaining holes, and install remaining screws, washers, and nuts.

q. Reinstall weld assembly and wiring in lower door. Secure inner skin to lower door with rivets.

r. Close and lock upper door. Secure inner skin to upper door with rivets. Install latch mechanism handle.

s. Secure safety latch to lower forward pin guide assembly.

t. Secure switch boxes to upper door with screws.

u. (See Detail C.) Install rain seal, with upholstery glue, to upper door and hinge.

v. Install weld assembly.

w. Install door switches on bracket and adjust for proper setting.

x. Refoam area around door. Reinstall inner skin around door frame and secure with rivet.

BAGGAGE COMPARTMENT. The baggage compartment is located aft of the divan seat in the pressurized compartment. The seat backs fold down giving easy access and inflight accessibility to the compartment.

SEATS. The seats consist of metal structure with foam rubber cushions covered by a durable fabric.

a. Crew Seats. (See figure 2-25.) The crew seats are manually adjustable in vertical and longitudinal positions. The right forward lever is for vertical seat adjustment and the left aft lever is for longitudinal adjustment.

b. Passenger Seats. (See figures 2-26, 2-27, and 2-28.) Seats are provided in the cabin for six passengers. The forward aft facing seat on the right side of the cabin is stationary and conceals the toilet facilities.

1. Channel
2. Base
3. Close-Out Pan
4. Armrest
5. Rod Link
6. Link Assembly
7. Lockpin
8. Spring
9. Sleeve
10. Filler
11. Channel
12. Stop - Seat Rail
13. Seat Rail
14. Seat Stop
15. Armrest Attachment
16. Lever - Left Hand
17. Channel Assembly
18. Tube - Support
19. Clamp
20. Link
21. Tube Assembly
22. Plug
23. Fitting - Seat Attach
24. Lever - Seat Adjust
25. Base
26. Armrest Assembly

(Continued)

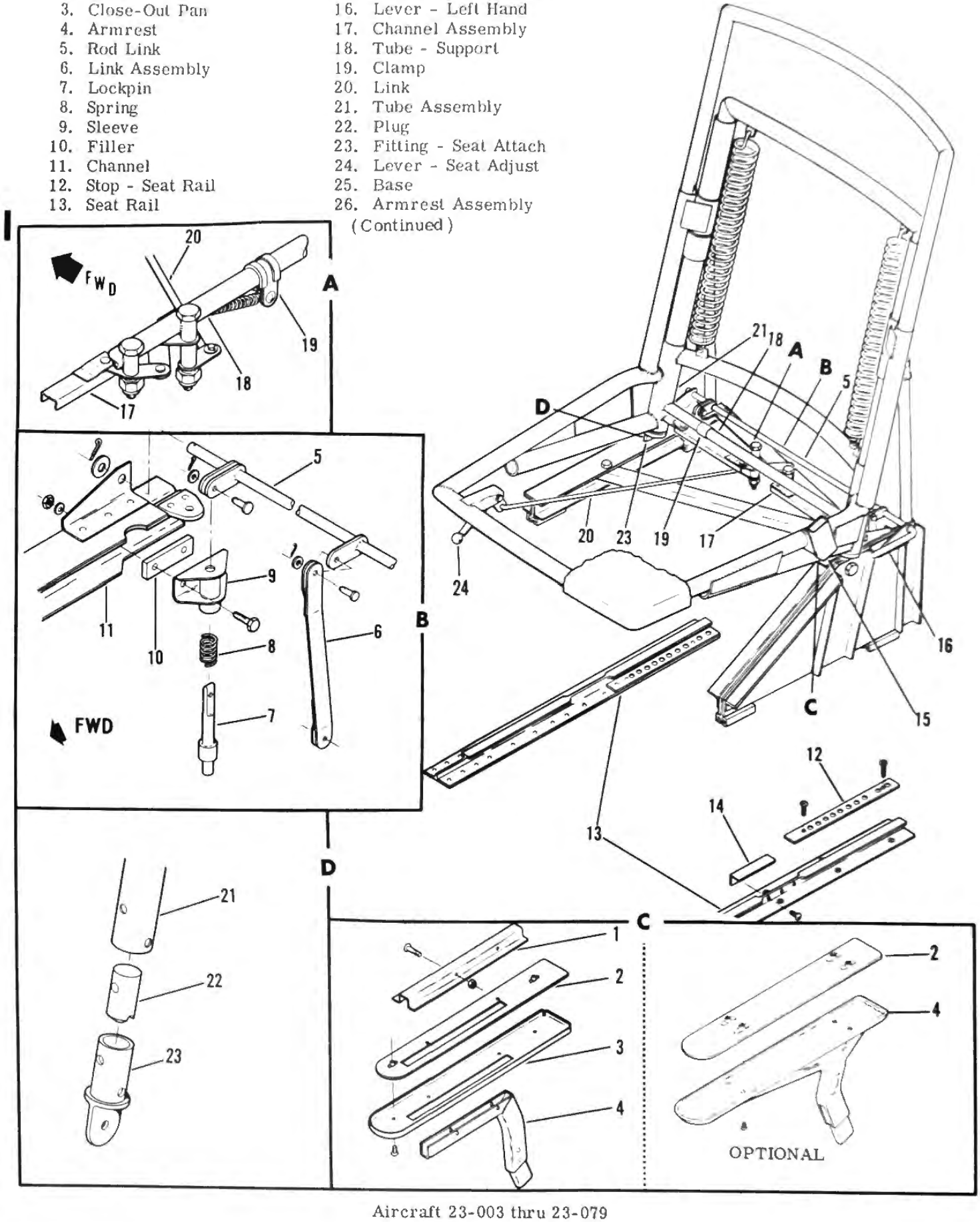

Aircraft 23-003 thru 23-079

Figure 2-25. Crew Seat Installation (sheet 1 of 2)

27. Angle - Stiffener
28. Lever - Seat Lock
29. Pin - Seat Lock
30. Spring - Seat Lock
31. Guide - Pin
32. Spring - Seat Adjust
33. Pin
34. Rod
35. Bellcrank
36. Safety Belt
37. Hook
38. Attachment Fitting
39. MS20995C41 Safety Wire

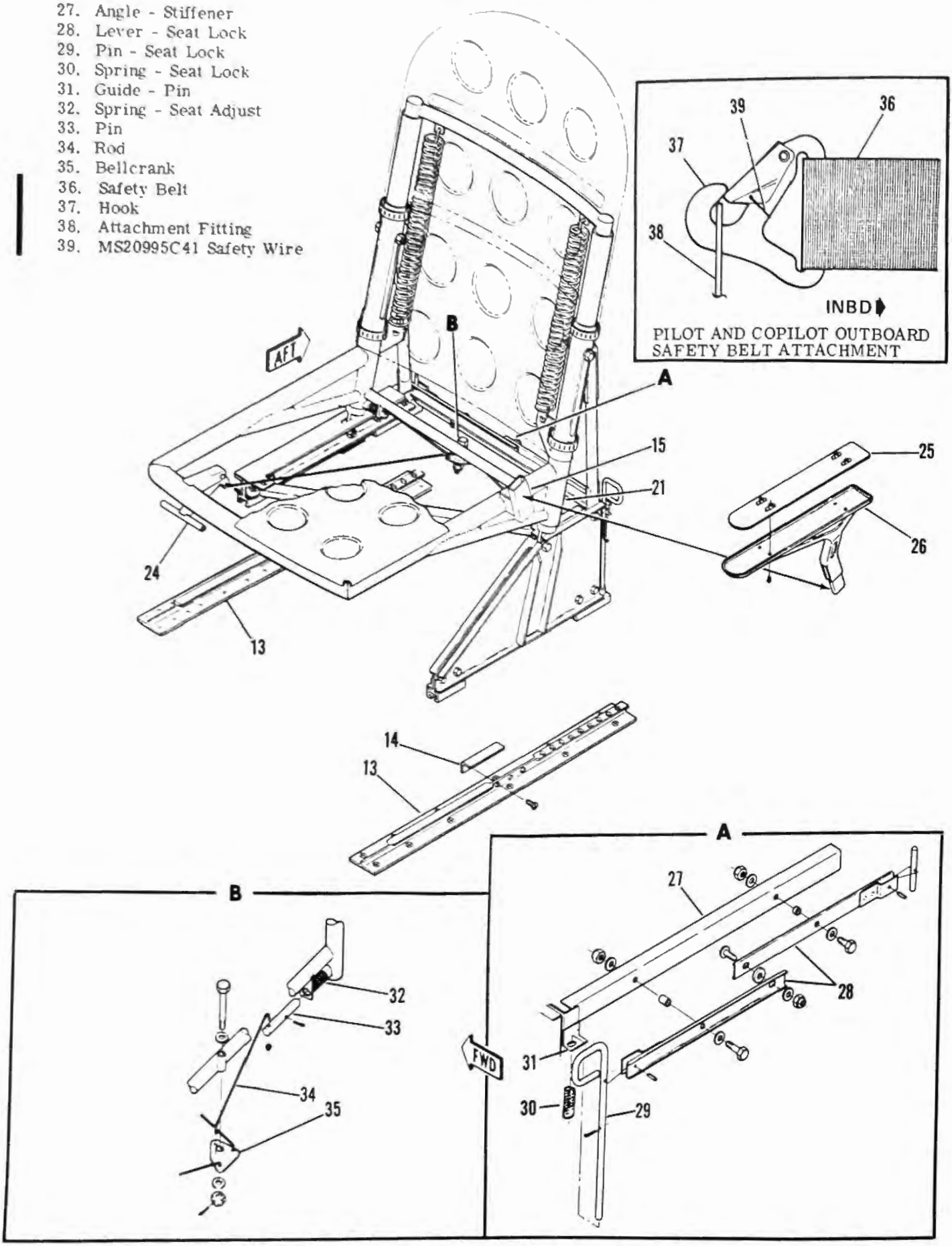

Aircraft 23-080 thru 23-099

Figure 2-25. Crew Seat Installation (Sheet 2 of 2)

1. Seat Bottom Assembly
2. Seat Belt
3. Seat
4. Bucket
5. Bracket
6. Tray Assembly
7. Frame Assembly
8. Seat Stop
9. Bracket - Seat Belt
10. Static Port
11. Tube
12. Fitting - Tube
13. Link
14. Cushion Back

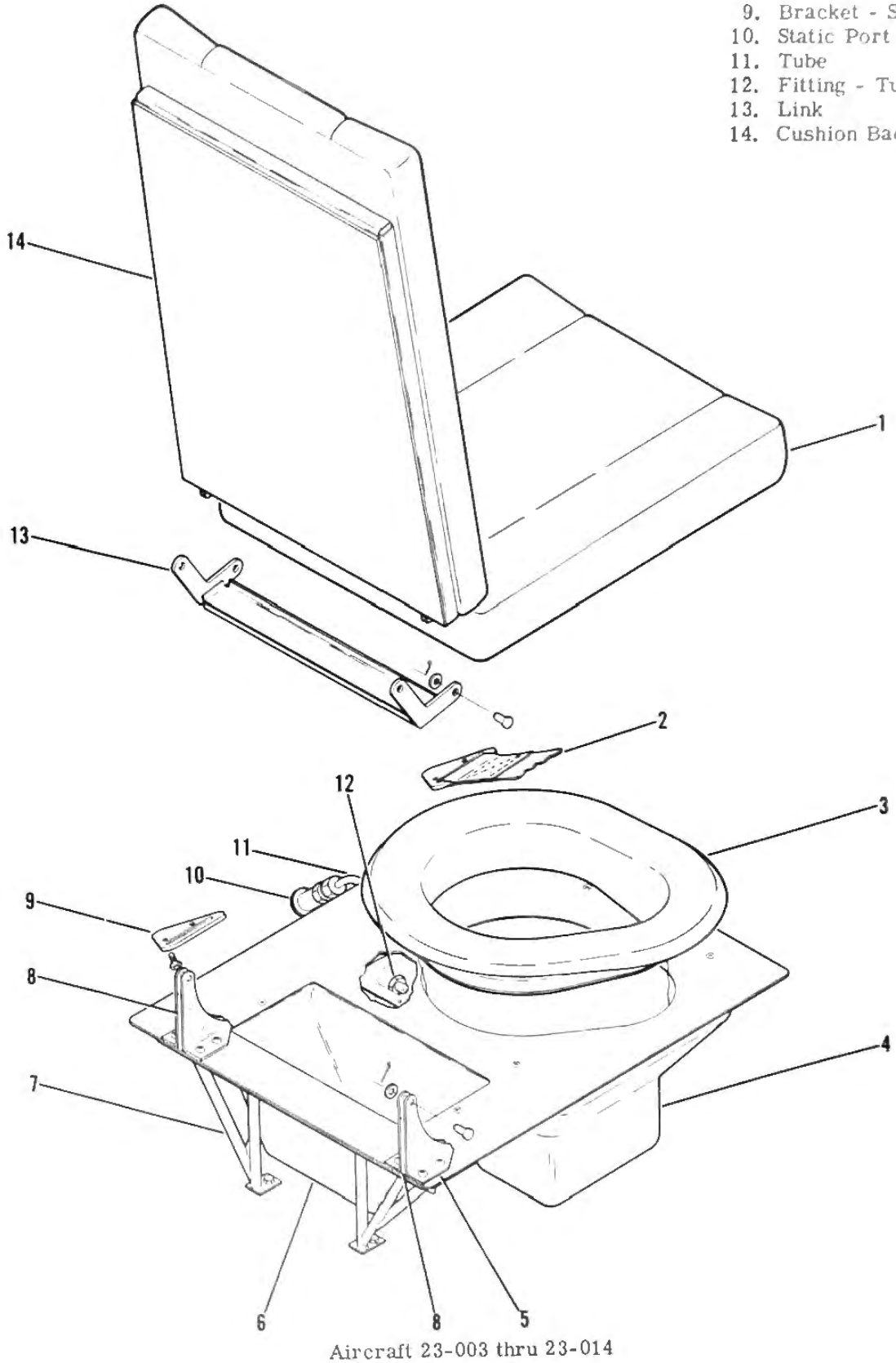

Aircraft 23-003 thru 23-014

Figure 2-26. Toilet Installation (Sheet 1 of 2)

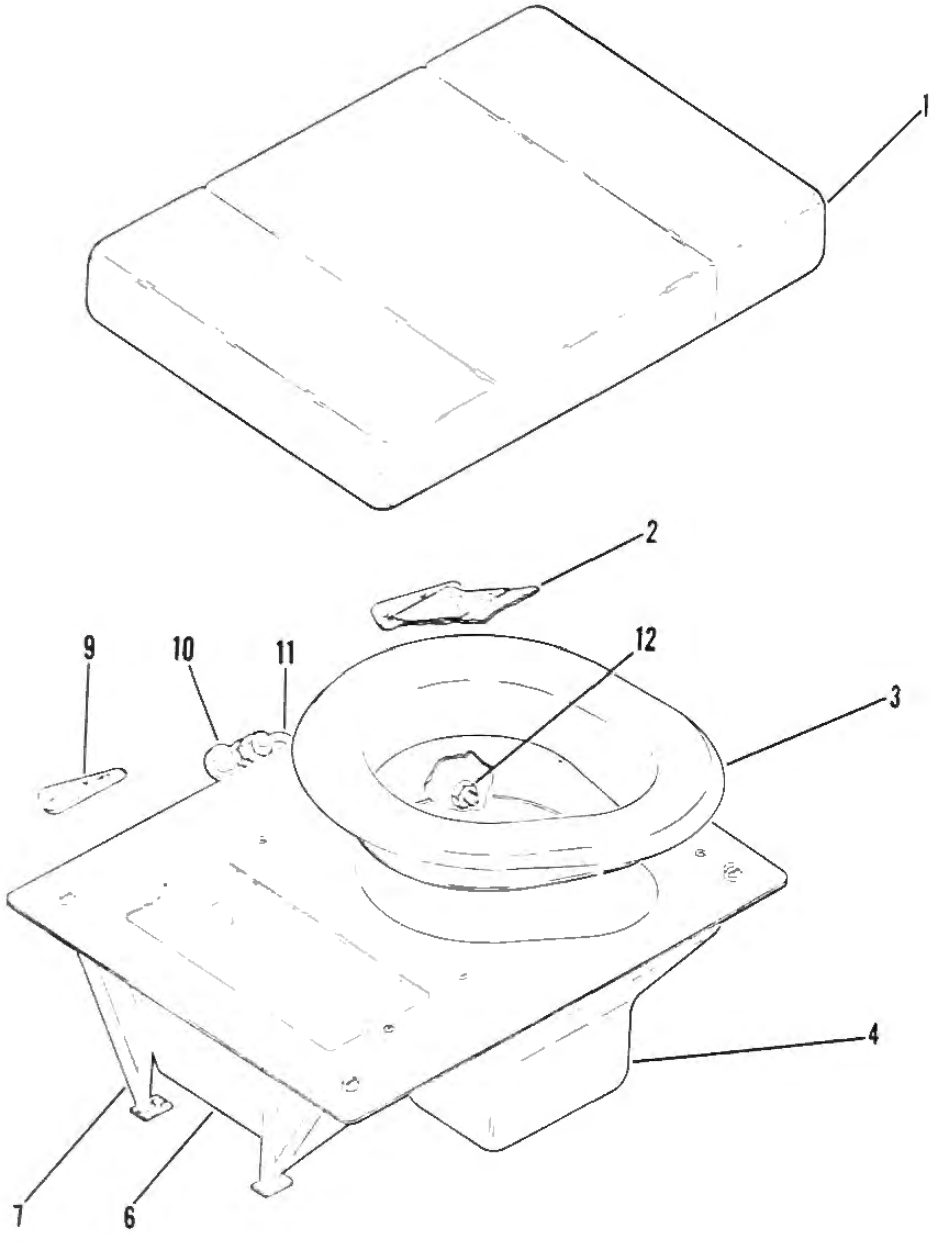

Aircraft 23-015 thru 23-099

Figure 2-26. Toilet Installation (Sheet 2 of 2)

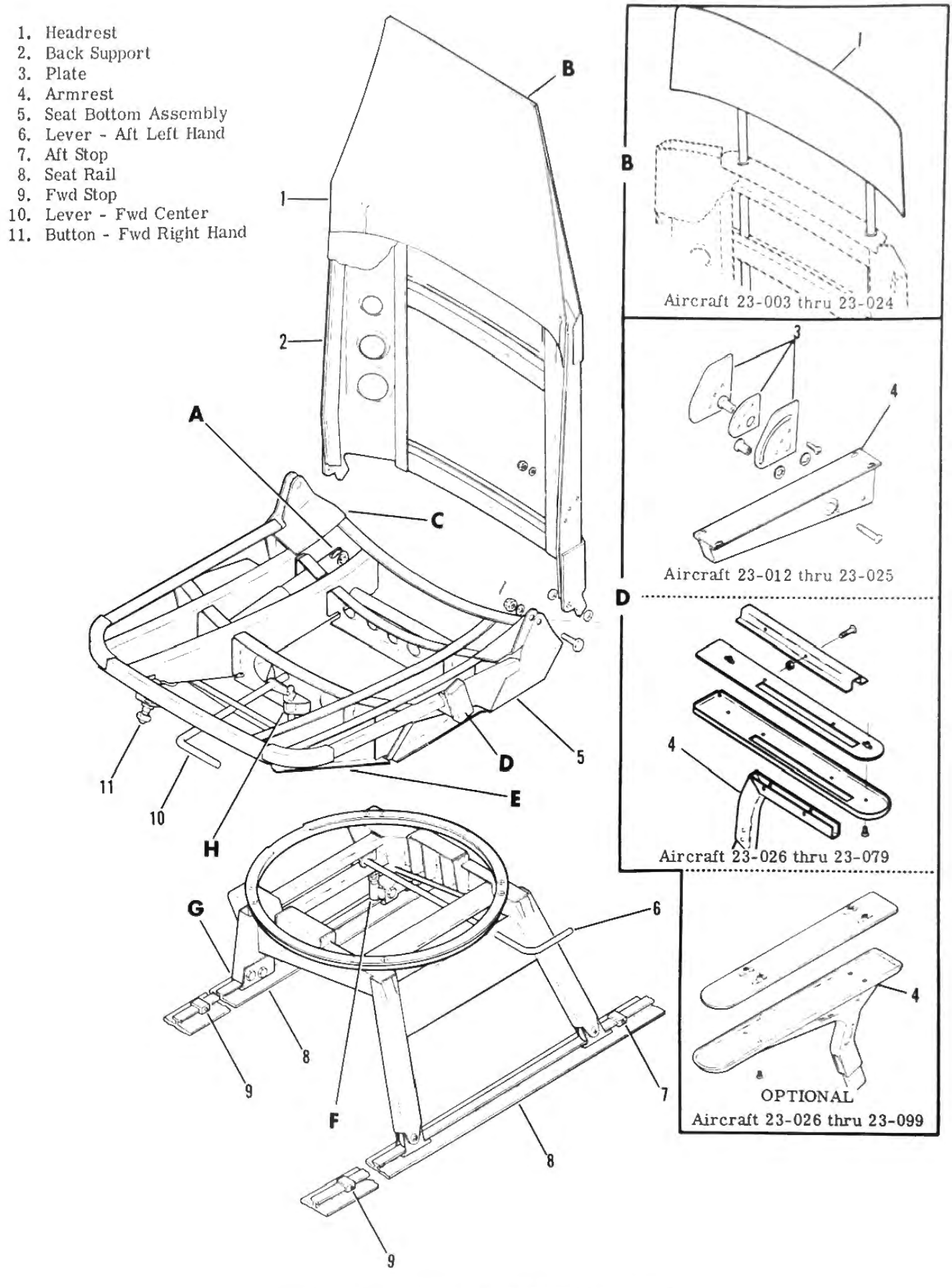

Figure 2-27. Swivel Seat Installation (Sheet 1 of 2)

12. Fitting Assembly - Seat
13. Bearing Assembly
14. Torque Tube
15. Bearing
16. Hydrolok Control
17. Hydrolok Actuator
18. Corner Fitting
19. Slide
20. Shoe
21. Tube Assembly
22. Spring
23. Pin Rod - Aft
24. Track Latch Roller Assembly
25. Shoe Assembly
26. Seat Belt Assembly
27. Roller
28. Bushing
29. Track Roller Assembly
30. Tube Assembly
31. Sleeve Assembly
32. Spring
33. Pin Rod - Forward

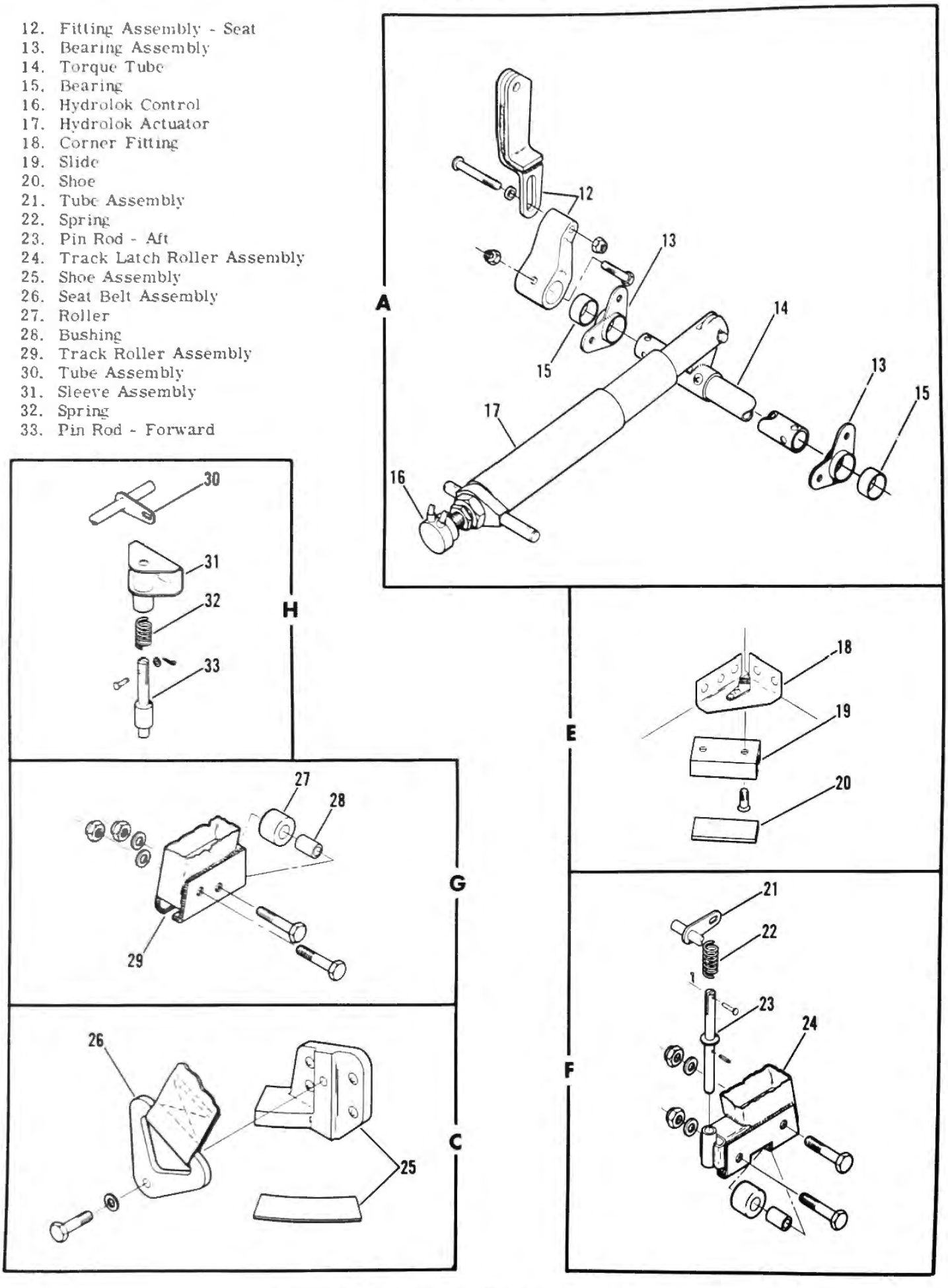

Figure 2-27. Swivel Seat Installation (Sheet 2 of 2)

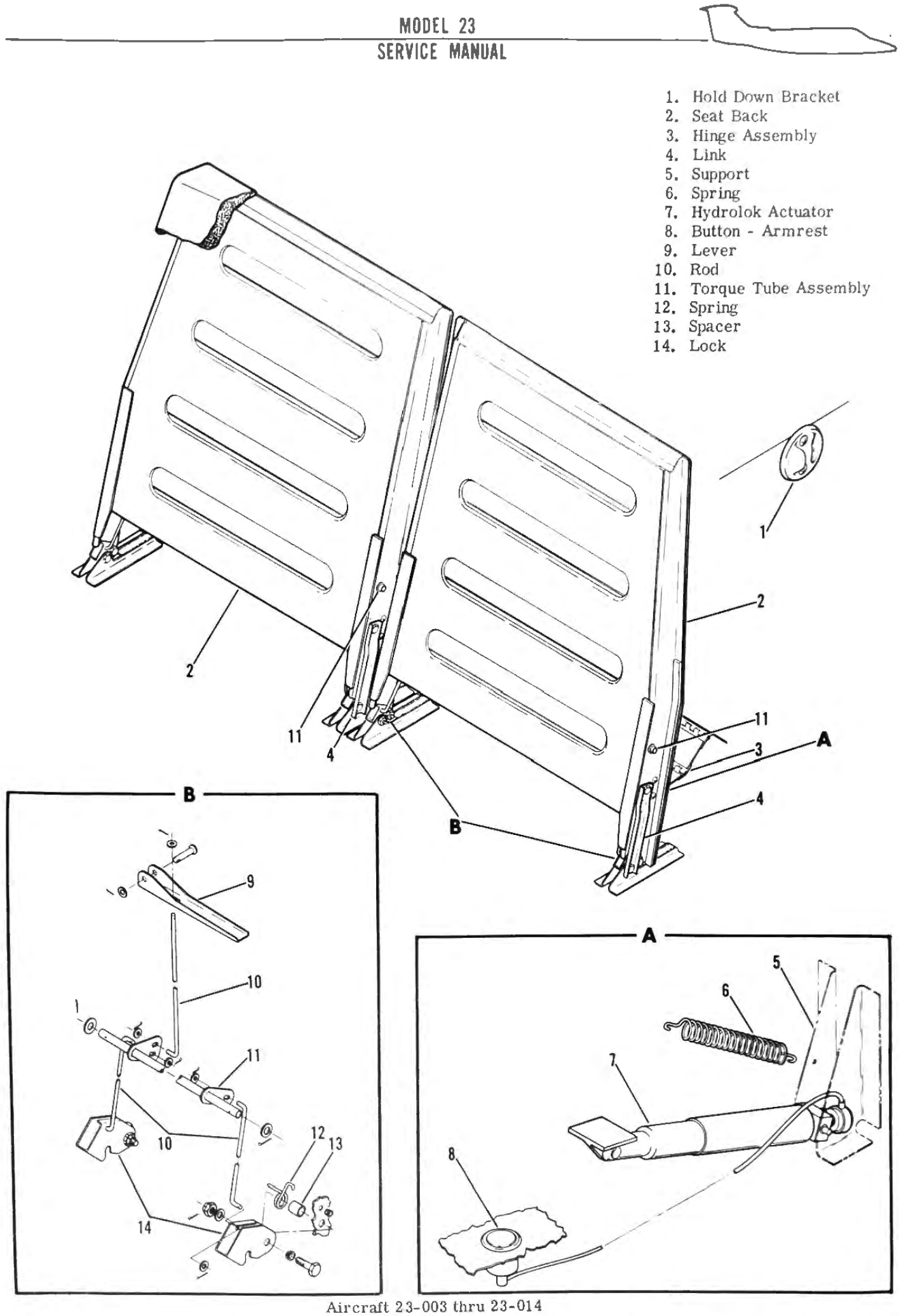

Aircraft 23-003 thru 23-014

Figure 2-28. Aft Divan Seat Installation (Sheet 1 of 2)

15. Lever
16. Lever Bracket
17. Spacer
18. Spring
19. Catch Bracket
20. Seat Back
21. Seat Belt Assembly
22. Seat Bottom

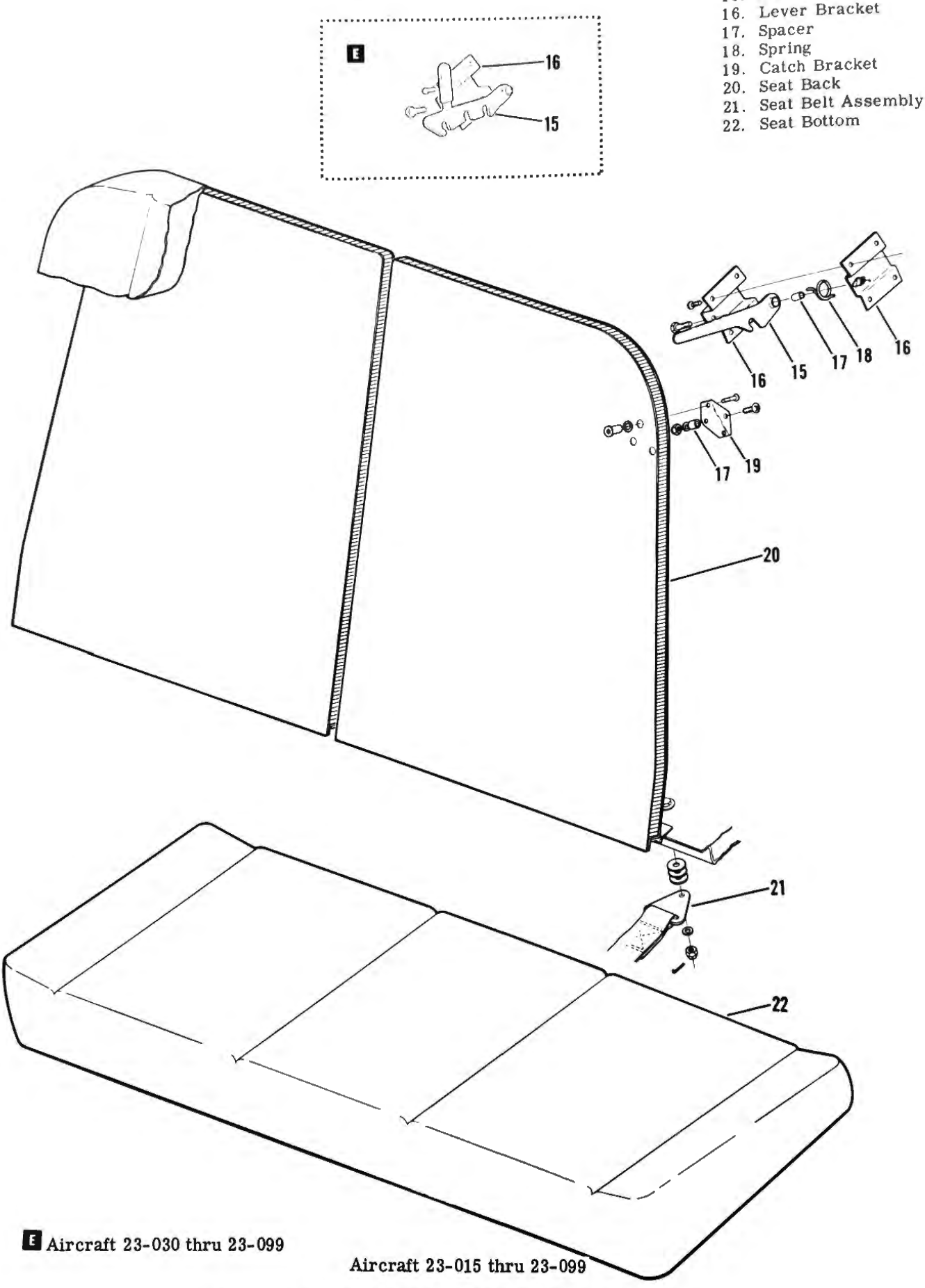

E Aircraft 23-030 thru 23-099

Aircraft 23-015 thru 23-099

Figure 2-28. Aft Divan Seat Installation (Sheet 2 of 2)

Learjet Temporary Service Manual Revision

SERVICE MANUAL AFFECTED: Gates Learjet Model 23 Service Manual

FILING INSTRUCTIONS: Insert adjacent to page 2-65 and retain until further notice.

REASON: To add life preserver maintenance practices.

INSTRUCTIONS: Add the following text to the Service Manual.

LIFE PRESERVERS. Life preservers, due to aging and chafing during storage, are subject to deterioration. Life preservers should be inspected on an annual basis if the aircraft is flown over land masses only. Aircraft which frequently fly over water should proportionally decrease the time interval between inspection. In no case should inspection interval exceed 2 years. Experience indicates that preservers may be in need of replacement at the end of 5 years due to the porosity of the rubber coated material.

LIFE PRESERVER INSPECTION.

a. Remove the life preservers from aircraft, unfold and lay on a flat surface free of sharp protrusions.
b. Inspect life preserver for damage or deterioration. A sour smell, hardness or brittleness indicates perished fabric.
c. Inspect all patches for condition and security.
d. Inspect all stitching for frayed, rotted or torn stitches.
e. Inspect all snap fasteners for correct operation, security, and corrosion.
f. Assure that instructions are clearly printed and legible.
g. Inspect webbing and metal fasteners for proper operation.
h. Assure that all metal parts are free of corrosion and damage and that they function properly.
i. Check mouth valves and tubing for leakage, corrosion or damage.
j. Remove CO_2 cylinder and inspect discharge mechanism.
k. Inspect gaskets, valve core, and pull cord for deterioration.
l. Perform a weight check of the CO_2 cylinder.
m. The weight of the CO_2 cylinder shall not be less than the weight stamped on the cylinder.

Note

Replacement CO_2 cylinders shall be those with joint Army/Navy Specification MIL-C-00601.

n. Install acceptable CO_2 cylinder on life preserver.

CAUTION

Do not use high pressure air to inflate preserver. This will exceed the design limits of the oral inflation tube and may burst the life preserver.

o. Inflate life preserver to 2 psig and let stand for 12 hours at room temperature (constant).

Note

Leak test must be performed with the CO_2 holder assembly properly assembled to the life preserver.

p. If preserver retains adequate rigidity after 12 hours, it is acceptable.
q. Deflate preserver.
r. Mark preserver to indicate inspection date.
s. Assure that the CO_2 actuating lever is safetied.
t. Refold the preserver and stow.

LIFE PRESERVER CLEANING. Warm soapy water is the only solution to be used in cleaning the life preservers. The preserver should then be thoroughly rinsed, hung up, and allowed to dry. Other cleaners may wash off the printed instructions and deteriorate the fabric.

c. The two mid-cabin swivel seats are designed to swivel 180°, to slide fore and aft on seat rails, and to recline. The forward center lever allows for seat swivel. The forward right button sets the seat in a recline position and the left aft lever is utilized for fore and aft adjustment.

d. The aft divan seat is full cabin width with split-type seat backs. The seat backs may be folded down against the seat bottom to provide additional cargo space. On aircraft [A], the seat backs may be adjusted to recline by depressing the armrest button. Individual levers are located on the aft side of the divan for folding the seat backs down.

CLEANING SEATS. Refer to INTERIOR CLEANING in Section I of this manual.

SAFETY BELTS. Each seat is equipped with a two-piece nylon safety belt. The belts are removed by removing their attaching hardware. If, for any reason, the outboard portion of either the pilot's or copilot's safety belt is removed from the attachment fitting it must be reinstalled per figure 2-25.

CREW SHOULDER HARNESS. A crew shoulder harness assembly is provided as optional equipment. The lower section of the harness assembly is attached to the existing seat belts, and the upper harness section is attached to a reel mounted above each crew seat.

MAP CASE [B]. A map case, located on the left side of the cockpit, is provided for stowage of maps and flight reports.

WINDSHIELD. (See figures 2-29 and 2-30.) The two-piece windshield consists of dual impact-resistant plexiglas panels. The panels are secured to the fuselage structure and the windshield centerpost structural member with screws and retainers. Anti-ice and defog systems are installed to provide maximum visibility in all weather conditions.

WINDSHIELD REPLACEMENT. (See figure 2-29.)

a. To gain access to the windshield installation, remove equipment and interior as follows:

WARNING

Close oxygen system shutoff valve and purge oxygen lines. Refer to OXYGEN SYSTEM-PURGING, Section IV.

Note

Royalite interior removal and installation should be accomplished in temperatures of 60° or more as panels lose elasticity in cold atmospheres.

1. Remove oxygen and microphone hardware as necessary to facilitate removal of pilot or copilot upper side interior trim panels. Remove panels.
2. Remove lighting fixture trim and overhead pilot and copilot panels.
3. Remove interior trim from windshield center post.
4. Lower pilot and copilot instrument flight panels to gain access to section forward of instrument panel. Refer to INSTRUMENT PANEL, Section VI of this manual.
5. Remove clamps and hoses from interior defog nozzles (see figure 4-17).
6. Remove nuts securing instrument panel glareshield and remove glareshield and internal defog nozzles from aircraft.
7. Remove compass and bracket from windshield centerpost and remove and tag light wiring.

External Defog Removal. (See figure 4-17.)

8. Remove clamp and hose from external defog nozzle.

Note

DO NOT attempt to punch out rivet shanks after heads are removed.

9. Using a No. 40 drill, drill out heads of external defog nozzle attaching rivets and remove rivet head; this will allow a clear view of rivet shanks.
10. Using a No. 30 drill, drill out rivet shanks and remove external defog nozzle from aircraft.

b. Remove windshield as follows: (See figure 2-29.)

1. Remove windshield retainer screws and nuts.
2. Remove windshield from aircraft.

Note

- The inner windshield does not have to be removed when replacing only the outer windshield. Sealant will hold inner windshield in place.
- When both internal and external windshields are to be replaced, remove dehumidifier tube from inner windshield dehumidifier nozzle and remove inner windshield from aircraft.

WINDSHIELD INSTALLATION. (See figure 2-29.) Because replacement windshields do not contain the necessary attach holes, special drilling precautions, which are outlined below, must be followed when installing the windshield.

a. Recommended windshield drill speeds are; hand drill 2100 to 2500 rpm, automatic constant speed drill 2100 rpm.

b. Recommended drill feed rate is .001" per revolution. The drill should be allowed to do all the work with little or no force by the operator. Forcing the drill will cause the back side of the windshield to chip or flake as the drill breaks through.

c. Back out drill several times during drilling operation to clear chips and to lubricate drill by dipping in drill wax.

[A] Aircraft 23-003 thru 23-014.
[B] Aircraft 23-015 thru 23-099.

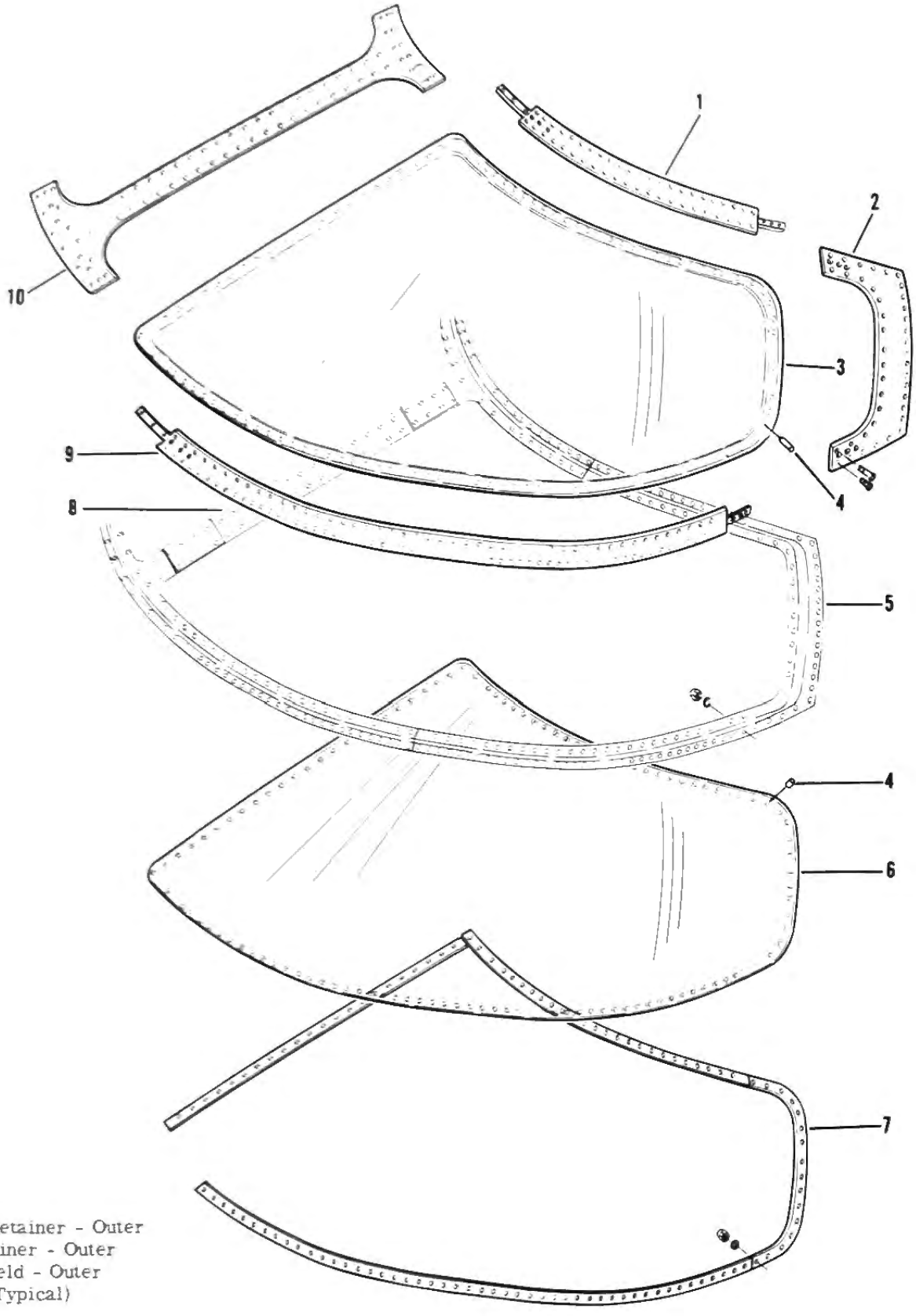

1. Upper Retainer - Outer
2. Aft Retainer - Outer
3. Windshield - Outer
4. Insert (Typical)
5. Frame
6. Windshield Inner
7. Retainer - Inner
8. Center Splice
9. Retainer - Outer
10. Retainer Center Strip - Outer

Note

Install inserts in each hole of inner and outer windshield.

Figure 2-29. Windshield Installation

1. Locator Holes
2. Outer Retainer
3. Inner Retainer
4. Masking Tape
5. Edge Distance Line
6. Inserts
7. Fillet Seal
8. Outer Windshield
9. Fiberglas Filler
10. Faying Surface Seal

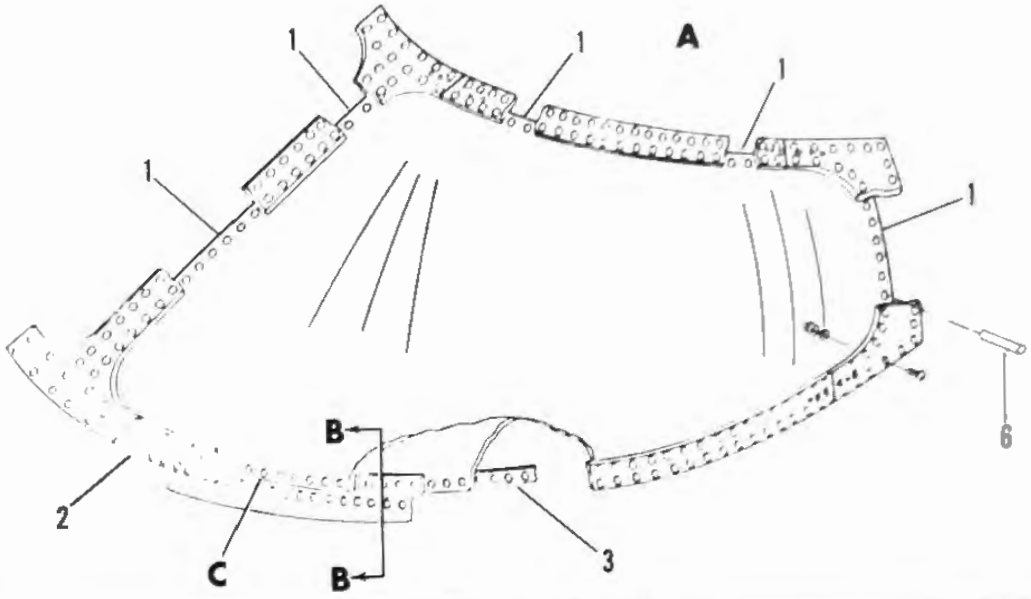

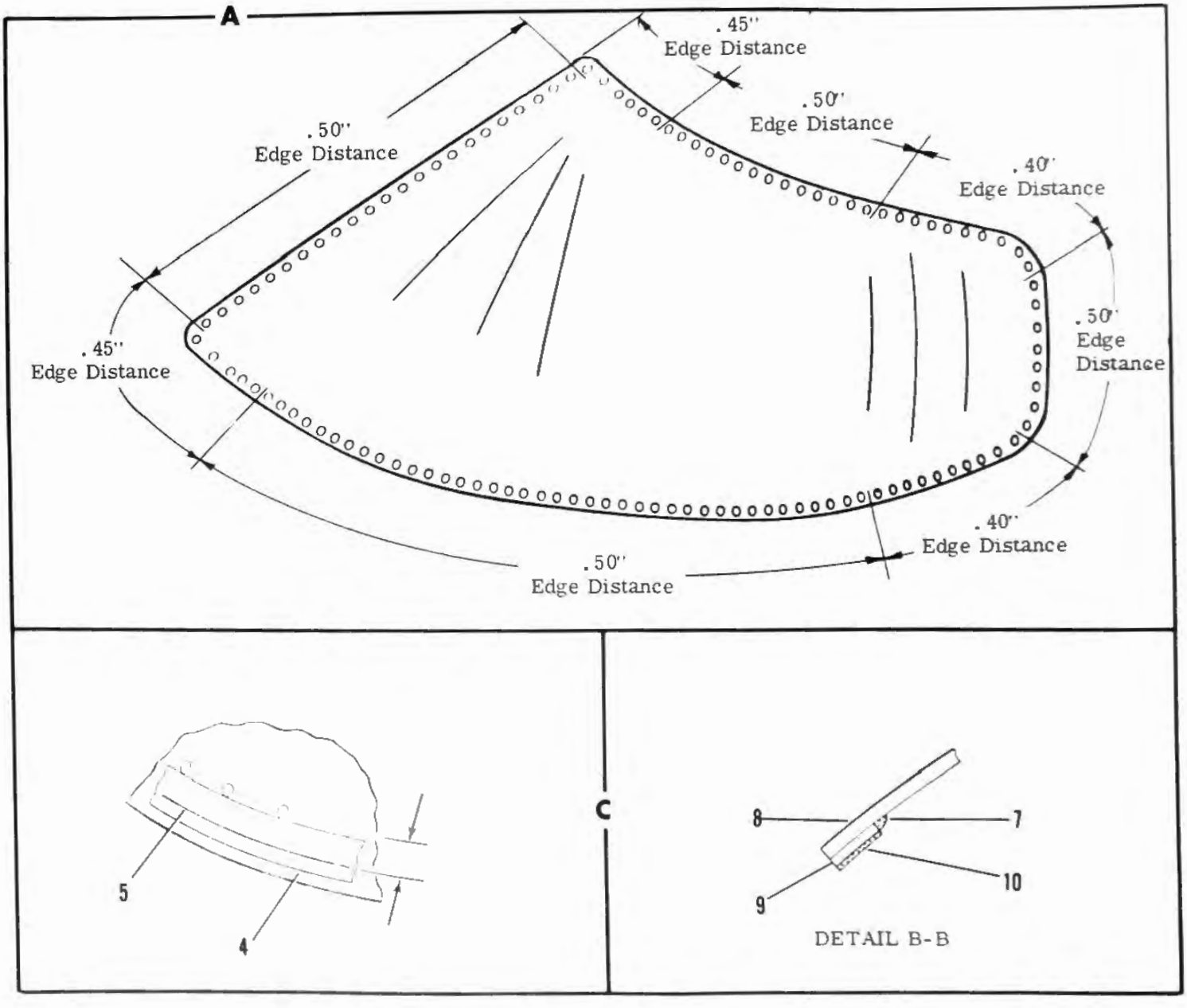

Figure 2-30. Outer Windshield Installation

Required Tools and Material:

a. No. 12 drill bit resharpened to a point. Slow spiral twist drills with polished flutes are recommended. Flutes should be as wide as possible to aid removal of a continuous ribbon of material. The best tip angle is between 30° and 60° and this will depend on the size of the flute. Lip clearance angles should be ground between 5° and 12°.
b. 1 4" reamer with a No. 12 pilot
c. Kraft paper
d. Sealant Proseal #890, Class B 1 2, B2
e. 3 4" masking tape.

Outer Windshield Installation. (See figure 2-29.)

a. Thoroughly clean old sealant from retainers and windshield frame.
b. Trim protective paper on new outer windshield back approximately 1 1 2 inches from edge prior to drilling.

CAUTION

Use care when removing the protective paper to prevent damage to new windshield.

c. Position new outer windshield on aircraft making sure all holes in the existing frame are equidistant from the edges of the new windshield.
d. Using the No. 12 drill, spot drill six holes around new windshield using the existing inner windshield and frame as a guide. Space holes approximately as illustrated in figure 2-30, item (1).
e. Position inner (3) and outer (2) retainers on windshield and cleco through holes (1) with 3/16" wingnut type cleco.
f. Using the No. 12 drill, drill remainder of holes in new windshield using the outer retainers as a guide.

CAUTION

Care should be exercised when drilling the above holes. Improper alignment of the drill will cause damage to the inner windshield and frame assembly.

g. After holes are drilled, remove windshield from aircraft and place on a clean table.
h. Apply 3/4" masking tape around outer surface of windshield, between the outer edge of the attach holes and the edge of the windshield.
i. Mark edge distance on masking tape. The edge distance is measured from the center of the attach holes to the outer edge of the windshield.
j. Trim outer windshield to edge distance line with a band saw and smooth with sander (#80 aluminum oxide sanding disc). Slightly deburr inner and outer edge surface of windshield.
k. Ream out all holes in windshield with a pilot reamer (No. 12 pilot with .250 reamer).
l. Slightly deburr holes on both sides of windshield using a machine countersink.
m. Install inserts in all holes. The inserts may require slight tapping with a fiber mallet. Inserts are to be installed flush with windshield.

Note

If inserts protrude through holes of windshield, trim excess with razor blade. Always trim toward outer edge of windshield.

n. Thoroughly clean all drill shavings, etc, from inner windshield cavity.
o. Following the instructions outlined in Section I, clean inner and outer windshield.
p. Apply a fillet seal (Proseal #890, B 1/2) around fiberglas filler and fair in.
q. Apply a faying seal (Proseal B 1/2) on fiberglas filler.
r. Position new outer windshield on aircraft and secure with 3/16" wing nut clecos.
s. Apply a fillet seal (Proseal B2) around entire outer edge of windshield and frame. Fillet to extend from outside edge of windshield to attaching structure by approximately 1/2 inch.

Note

Overlap sealant on outside edge and up on windshield to the edge of the windshield attach holes.

t. Install outer retainers.
u. Torque screws and bolts to 30 inch-pounds.

CAUTION

When installing windshield panels, do not tighten retaining screws in excess of 30 inch-pounds.

v. Pressure test aircraft to 9.5 psi and check for leaks. Maximum allowable leakage rate is 3.4 pounds per minute.
w. Reinstall external defog nozzle as follows:
   1. Apply faying surface sealing to the underside of the external defog nozzle. Refer to applicable paragraph, this section.
   2. Reinstall external defog nozzle to aircraft.
   3. Reinstall defog nozzle hose and secure with clamp.
x. Reinstall interior hardware and trim as follows:
   1. Reconnect compass wires and reinstall compass and bracket on centerpost.
   2. Reinstall glareshield and internal defog nozzles in aircraft. Reconnect hoses and secure with clamps.
   3. Reinstall interior trim, electrical, oxygen, and microphone hardware.

Inner Windshield Installation. (See figure 2-30.)

Installation of the inner windshield is essentially the same as the outer windshield outlined above.

Learjet Temporary Service Manual Revision

MANUALS AFFECTED: Gates Learjet Models 23, 24, 24B, 24D/E/F and 25.

FILING INSTRUCTIONS: Insert as listed below and retain until further notice.

Model 23	- Insert adjacent to page 2-68.
Model 24	- Insert adjacent to page 2-53.
Model 24B	- Insert adjacent to page 2-61.
Model 24D/E/F	- Insert adjacent to page 2-10.
Model 25	- Insert adjacent to page 2-62.

REASON: To add approved repairs for the cabin windows and windshield.

INSTRUCTIONS: Add "Approved Repairs" to read as follows:

WINDSHIELD AND WINDOW APPROVED REPAIRS.
A thorough analysis of windshield or cabin window damage must be made before attempting any repairs. Normally, light scratches or small pits can be repaired without reducing the structural integrity or reducing the optical quality of the windshield or cabin window. In some instances repairs may be allowable with respect to the structural integrity of the windshield or cabin windows, but not allowable with respect to the optical distortion incurred. Scratches or pits which require removal of material that reduces windshield thickness to less than 1.00 inch (2.54 cm) are not permitted.

Note

On 23-003 thru 23-099 not equipped with 300 knot windshield, the minimum windshield thickness is 0.430 inch (10.9 mm).

Scratches or pits which require removal of material that reduced the outer window glass thickness (outer laminate layer) to less than 0.400 inch (10.16 mm) are not permitted. Optical distortion of the windshield or cabin windows caused by repairs is considered the responsibility of the owner, crew and/or the facility performing the repairs.

Note

Service experience has shown that removal of scratches greater than .005 inch deep in the extreme curvature of the windshield often results in optical distortion which is not acceptable.

NAME	PART NUMBER	MANUFACTURER
Ultrasonic Thickness Gage	Caliper Model No. CL-202	Radiatronics P.O. Box 1230B Overland Park, Ks. 66212
Abrasive Paper	400A & 600A Grit Wet or Dry	Available Locally.
Polishing Compound	Cerium Oxide #2	L. L. Fusco Co. 4937 Olympic Blvd. Los Angeles, Calif.
Rubber Block	40-50 Shore H (Medium-Hard)	Available Locally.
Cotton Flannel Cloth		Available Locally.
Cleaner	901-D	Acorn Adhesive Co. 678 Clove Street Los Angeles, Calif.
Cleaner	Wilco Anti-Static Cleaner	Wilco Company Los Angeles, Calif.
Wax	Simonize Paste Auto Johnson Paste Auto DuPont Paste Auto	Available Locally

a. Using an ultrasonic thickness gage determine the thickness of the glass adjacent to the scratch or pit. Follow the manufacturer's operating instructions for the instrument.
b. Using a depth gage or other similar device measure the depth of scratch or pit as accurately as possible.
c. Using the thickness measured in step (2) and the depth of the scratch or pits as measured in step (3) determine whether repairs are allowable.

Note

Scratches or pits which require removal of material that reduces windshield thickness to less than 1.00 inch (2.54 cm) (23-003 thru 23-099 equipped with 300 knot windshield, 24-100 and Subsequent and 25-003 thru 25-064) or 0.430 inch (10.9 mm) (23-003 thru 23-099 not equipped with 300-knot windshield) are not permitted. In such cases the windshield must be replaced.

Note

Scratches or pits which require removal of material that reduces outer cabin window thickness to less than 0.400 (10.16 mm) are not permitted. In such cases the cabin window must be replaced.

d. Thoroughly clean windshield or cabin window to be repaired. This will remove all foreign matter which may cause more scratches when repairs are begun.

CAUTION

Extreme care must be used during repairs to prevent view distortion.

Do not use sanding block in a back-and-forth motion.

e. Wrap abrasive paper (400-A, wet or dry) around a rubber sanding block.
f. Using large amounts of water, lightly sand over and around the imperfection in a circular motion. Sand an area 2 to 3 times that of the imperfection in order to minimize optical distortion and excessive thinning.
g. Continue sanding lightly, using large amounts of water, until the initial imperfection is no longer apparent.
h. Change to 600-A, wet or dry adhesive paper.
i. Using large amounts of water, continue to lightly sand until the hairline scratches caused by the first sanding are no longer apparent. Sand an area 2 to 3 times larger than covered by the first sanding to minimize optical distortion and to "feather" out the repaired area.
j. Mix cerium oxide #2 with water to from a thin paste.

Note

Poly-Sand may be used in lieu of cerium oxide #2. Follow manufacturer's instructions.

k. Wrap sanding block in 2 or 3 layers of celan cotton flannel cloth to form a polishing pad.

CAUTION

Do not allow cerium oxide #2 paste to become dry.

l. Apply cerium oxide paste to surface of windshield or cabin window and lightly rub in a circular motion. Constantly add water to prevent paste from drying out and increase area of circular motion.
m. After sanding marks are removed, continue rubbing with polishing pad. Do not apply additional paste to rework area, just water. Continue rubbing surface whild adding water. This action will restore a glossy surface to the windshield or cabin window.

n. Using a clean cotton flannel cloth dry surface of windshield or cabin window.

o. Apply cleaner with clean cotton flannel cloth. After cleaner has dried wipe off cleaner film.

p. Apply wax and polish surface to a high gloss.

q. After completion of repairs, the windshield must be inspected by the aircraft owner, crew and/or facility performing the repair work to determine whether the optical distortion (if any) is acceptable.

Note

This inspection should be performed under both daytime and night time conditions.

CABIN WINDOWS. (See figure 2-31.) Three large dual-paned plexiglas windows are installed in the passenger cabin. The right rear window is removable and serves as the emergency exit.

REMOVAL AND INSTALLATION OF CABIN WINDOWS. Removal and installation of the cabin windows should be performed as shown in the exploded view sequence in figure 2-31.

CAUTION

When installing cabin windows, torque retaining screws 20 to 30 inch-pounds. Do not overtorque.

EMERGENCY EXIT WINDOW. (See figure 2-32.) The right rear window is equipped with a latch and serves as the emergency exit. The latch handle, located at the top center of the window, is pulled inboard to unlock. Continued inboard pull releases the window from the bottom retainer.

TOILET. Toilet facilities are provided under the seat cushion of the forward right passenger seat. The compartment consists of a disposable plastic bag secured to the bottom of the contoured seat with a drawstring. The compartment is under a slight vacuum which vents overboard any offensive odor. Opaque curtains provide privacy for the cockpit and cabin. The curtains are stowed when not in use.

REFRESHMENT CABINET. A refreshment cabinet with a convenient fold-away table is located in the passenger cabin directly aft of the pilot's seat. The cabinet contains provisions for three 1-quart vacuum jugs, a plastic cup dispenser, a bottle cabinet, and two storage compartments for supplies.

WORKTABLE. A double width worktable, surfaced with nylon felt, is stored above the baggage compartment. The table is easily erected when desired.

ASH TRAYS. Three ash trays, concealed by hinged covers, are located in the side consoles.

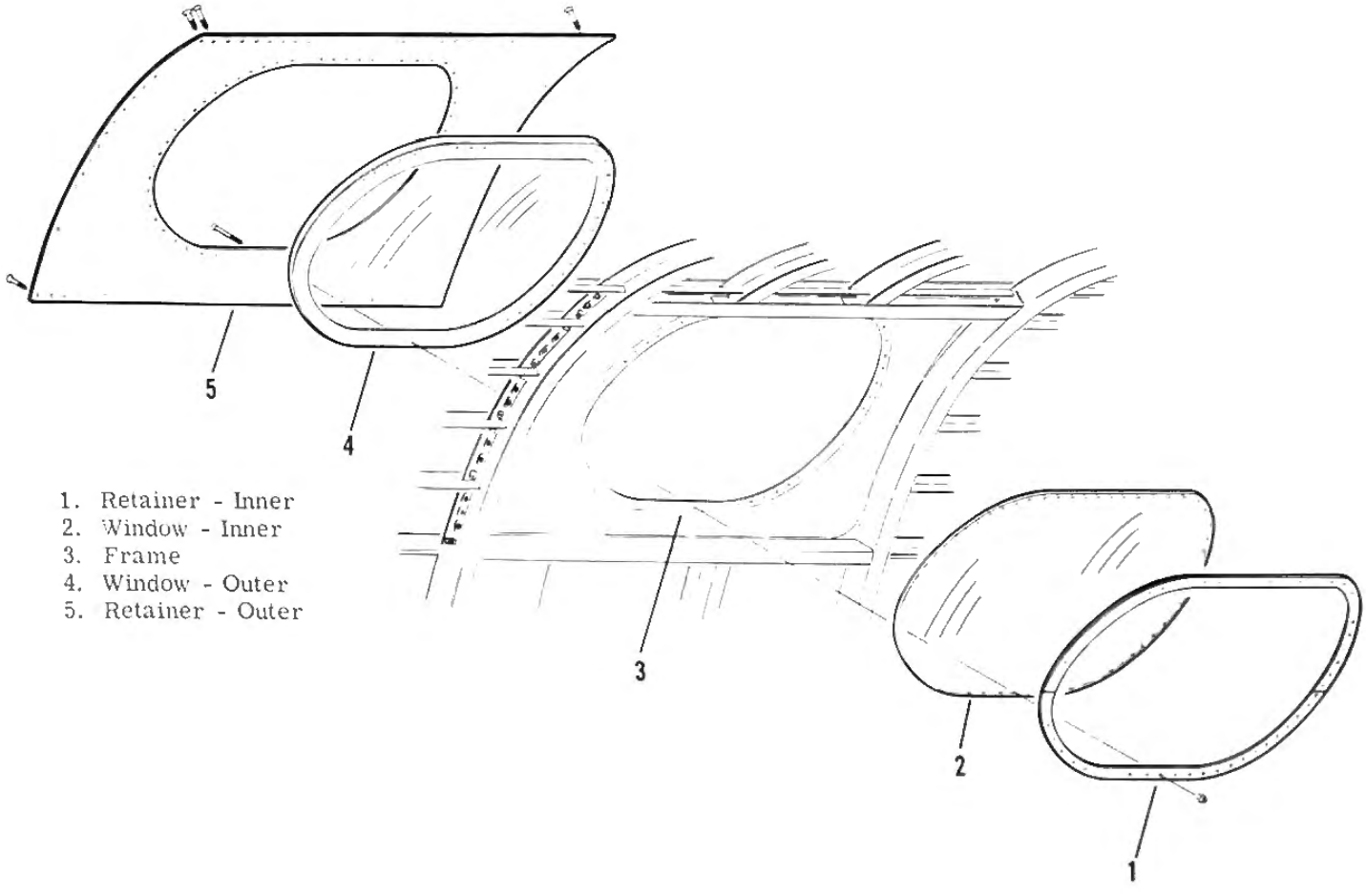

Figure 2-31. Cabin Window Installation

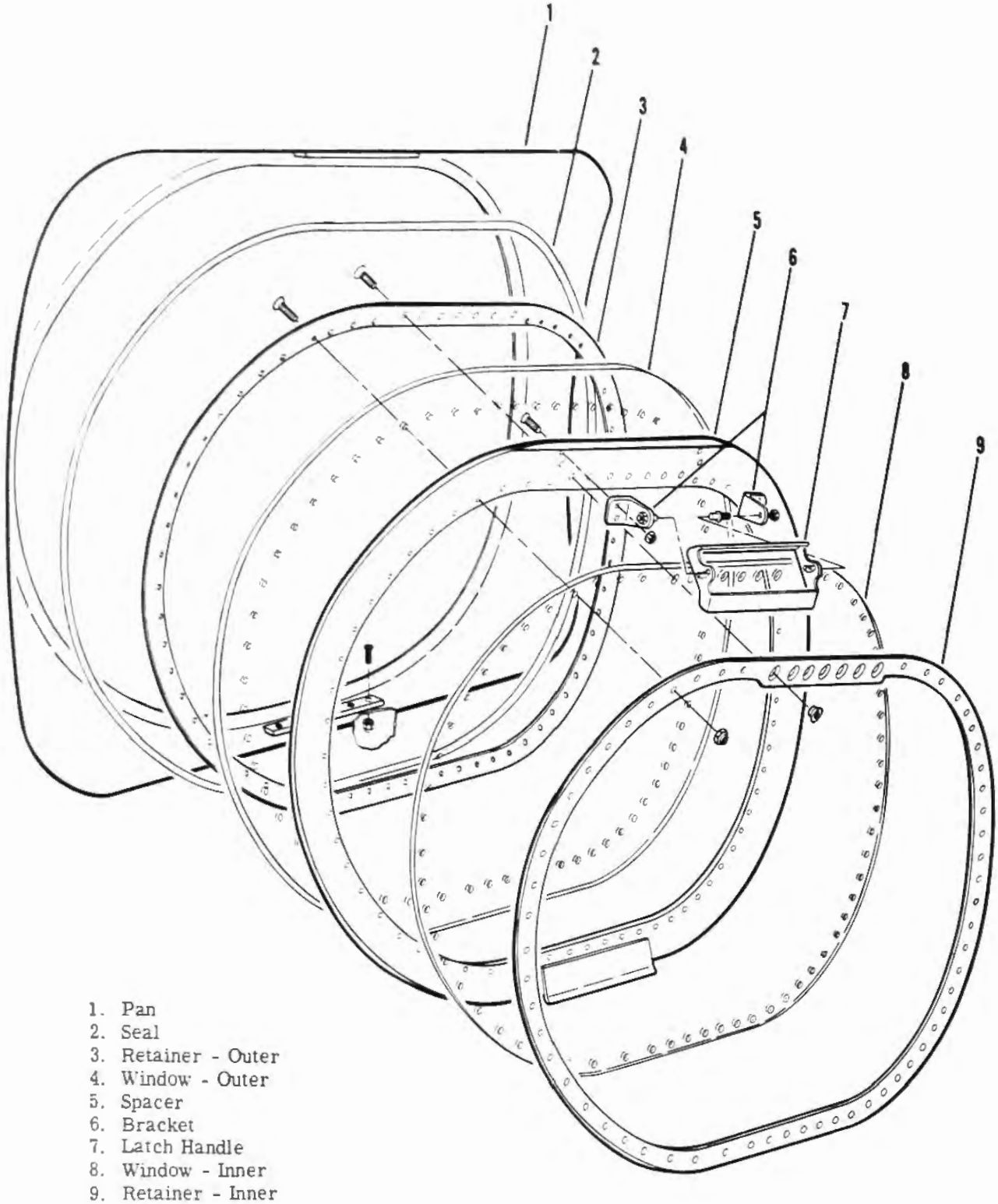

1. Pan
2. Seal
3. Retainer - Outer
4. Window - Outer
5. Spacer
6. Bracket
7. Latch Handle
8. Window - Inner
9. Retainer - Inner

Figure 2-32. Emergency Exit Window Installation

FUSELAGE SEALING. Sealing compounds have been used to seal sections of the airplane against leakage of fuel and pressurized air. During the course of structural or component inspection, the seals are to be examined for deterioration of compound and non-adherent characteristics. Any air leakage throughout the pressurized fuselage can normally be detected, when carrying out a fuselage pressure check, by aural means. Fluid leakage can be detected by the obvious presence of fluid, or fluid stains on the dry side of the structural members. For detailed information on integral fuel tank repair procedures, refer to Section V.

TYPES OF SEALS.

a. Hole and Slot Filling. Tool and coordination holes are closed with soft rivets except when one side is not accessible and in that case they are sealed. Sealant is also used for plugging joints, gaps, joggles, and holes, provided their size does not exceed specification limits shown in figure 2-35. All sealing is done on the on-pressure side. This assures that the pressure will help hold the seal in place.

b. Fillet Sealing. Fillet sealing is the application of a bead of sealant to cover seams or joints.

c. Injection Sealing. Injection sealing is the filling of holes or channels by forcing sealant through the void or cavity.

d. Faying Surface Sealing. Faying surface sealing is the sealing of two flat surfaces fastened together, one on top of the other before the parts are assembled. It is especially used to seal areas that are hard or impossible to seal after assembly.

e. Fastener Sealing. Fasteners are sealed by fillet sealing over the head of the fastener.

f. Electrical Wire Sealing. Electrical wire bundles are sealed at the point where they pass through a pressure bulkhead. The bulkhead fitting is filled with sealant to assure that leakage does not exist around the bundles.

EQUIPMENT AND MATERIALS.

Note

It is important that all equipment used for application of sealing compound be kept clean at all times. It is particularly necessary to see that this equipment is cleaned thoroughly after completing each job.

a. Sealant Removal and Cutting Tools (see figure 5-31)
b. Fillet Fairing Tools (see figure 5-32)
c. Stiff Bristle Brushes (not nylon)
d. Clean White Cotton Cloth
e. Pipe Cleaners
f. Solvent Dispensers (Polyethylene Squirt Bottles)
g. Sealant Gun (Pyle No. 950) or equivalent - Pyle Industries, Inc., Southfield, Michigan
h. Polyethylene Nozzles for Sealant Gun
i. Polyethylene Cartridges for Sealant Gun
j. Cleaning Solvents
   1. APCO No. 10 Mineral Spirits or equivalent - Sherwood and Co., Inc., Wichita, Kansas
   2. Skellysolve -S or equivalent - Skelly Oil Co., Kansas City, Mo.
   3. TT-M-261 Methyl Ethyl Ketone
k. Sealant
   1. Brushable Sealing Compound
      (a) Pro-Seal No. 890 Class A - Coast Pro-Seal and Manufacturing Co., Los Angeles, Calif.
   2. Extrusion Gun Sealing Compound
      (a) Pro-Seal No. 890 Class B - Coast Pro-Seal and Manufacturing Co., Los Angeles. Calif.
      (b) For minor repairs, sealant is available in pint or quart containers from Gates Learjet Corp., Wichita, Kansas.
   3. Firewall Sealant
      (a) Dow Corning 1200 Primer
      (b) Dow Corning Q-93-004 Sealant - Dow Corning Corp., Midland, Mich.
l. Parting Agent
   1. One part by weight of MIL-I-7444, vinyl tubing, dissolved in four parts of cyclohexanone. Do not use parting agent over paints, primers, or on acrylics.
m. White Cotton Gloves
n. Masking Tape.

PREPARATION FOR SEALING.

a. Determine whether any structural repair is necessary and if so, repair in accordance with standard structural repair practices.

b. Examine sealing in area of leakage and determine the seal level, and seal plane in adjacent structure.

Note

The seal plane is defined as being the boundary plane through any assembly of structural items which presents a continuous barrier to the flow of fluids or gases.

c. Identify the type of sealant used in area of defect.

d. Determine the type of seal (fillet, faying surface, etc) which will be required to carry out repair.

Note

Do not interchange sealing compounds. The material originally used has been found to be the most efficient for sealing the area.

e. Completely remove or notch sealant in the affected area to produce a solid residual material.

CAUTION

Cutting tools shall be of hardwood material. Metal cutting tools are not allowed.

f. Examine rework area for clean cuts and adequate notching and for access. Loose chunks or flaps of sealant on cut areas shall be removed.

g. Immediately prior to sealant application, remove grease, oil, dirt, and chips from all surfaces to which sealing compound is to be applied.

Note

The importance of proper cleaning prior to sealant application cannot be overemphasized. Sealing compound will not properly adhere to a dirty oily surface. The entire purpose of a sealant application is defeated if it lifts from the structure after it has been applied.

h. Clean only with unused clean cotton cloth, or equivalent absorbent materials, using clean solvent from dispensers.

i. Wipe off all solvent while wet with a clean cloth.

Note

The use of excess solvent shall be avoided.

j. Repeat steps h and i until no visible soil remains on the wiping cloth.

Note

It is permissible if some primer is removed during cleaning. The exposed metal surface need not be further treated provided the cleaning is accomplished per steps h, i, and j. If primer is completely removed, reprime the surface after completion of all sealing.

k. Clean an area wider than the width of the finally applied sealant.

l. Remove all solvent from assembled faying surfaces by blast of oil-free and water-free air.

m. Perform the final cleaning operation with a cloth just damp with solvent and wipe dry.

Note

The use of grease or wax base markings shall not be allowed in areas to be sealed. Any such markings inadvertently occurring shall be removed prior to sealing.

SEALING APPLICATION.

APPLYING FAYING SURFACE SEAL.

a. Applying Permanent Seal.

1. Apply sealant to one surface with a flow gun or spatula and spread out over the entire faying surface until a uniform thickness of approximately 1/32 inch is obtained.
2. Place the component parts together and install the required fasteners.
   (a) If fasteners are to be sealed, their installation shall be completed during the work life of the sealant.
   (b) If permanent fasteners cannot be installed prior to the end of the work life of the sealants, use temporary fasteners to hold the parts together until sealant has cured.
   (c) Permanent fasteners shall then be installed with fresh sealant on the fastener.
3. Fair out extruded sealant to leave a smooth fillet along the joint. (See detail A, figure 2-33.)

b. Applying Removable Seal.

1. Apply parting agent MIL-I-7444, vinyl tubing dissolved in four parts cyclohexonone, to one of the faying surfaces.
2. Apply sealant to opposite faying surface.
3. Assemble parts when parting agent is dry to touch.
4. If one faying surface is acrylic, apply parting agent to non-acrylic surface. (See detail B, figure 2-33.)

CAUTION

Parting agent reacts with acrylic and must not be applied to contact any acrylic surface.

APPLYING INJECTION SEAL.

a. Completely fill, with sealant, holes and joggles that require continuity of seal or blockoff seals.

b. Inject sealant into one end of the cavity or injection hole if provided, with an extrusion gun, until sealant emerges from all other openings. (See detail A, figure 2-34.)

CAUTION

To prevent the inclusion of air in the sealant, never completely empty a flow gun. Never seal from both ends of cavity as this tends to create air pockets and possible leaks within the seal.

Note

When opening is to be closed only for support of sealant, it is not necessary to inject the entire depth of the opening.

c. When a seal is made at the bottom of a slot, apply the sealant so as to fill and have continuous contact with the bottom and sides of the slot. (See detail B, figure 2-34.)

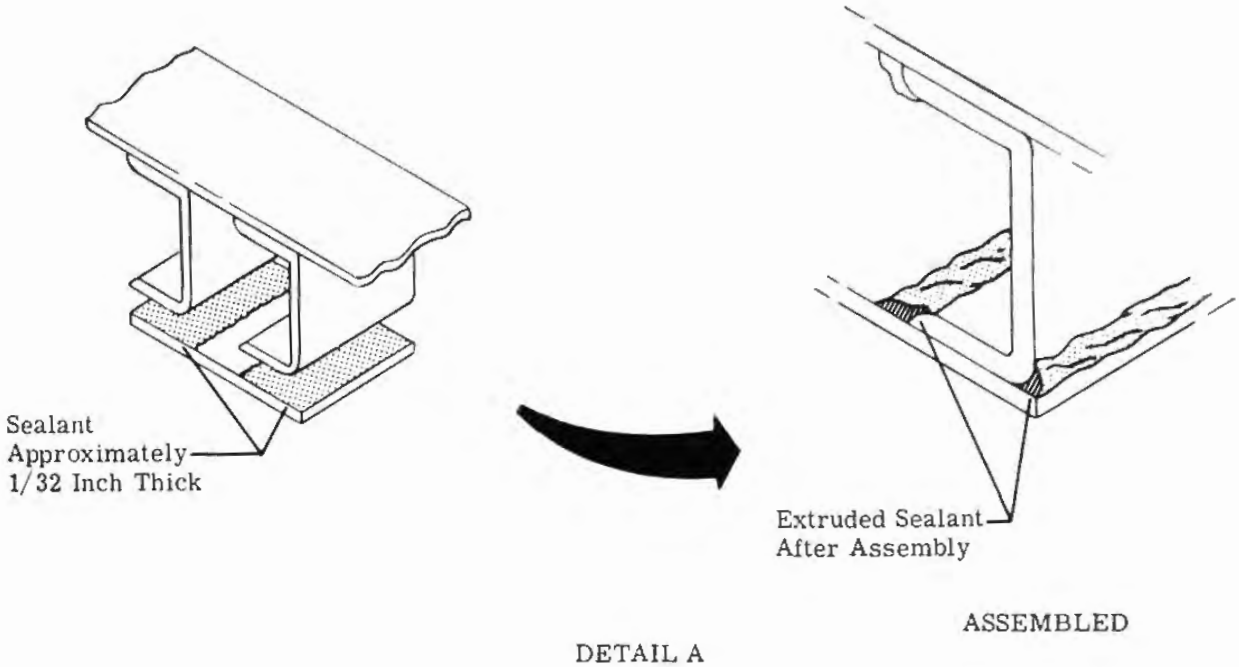

DETAIL A

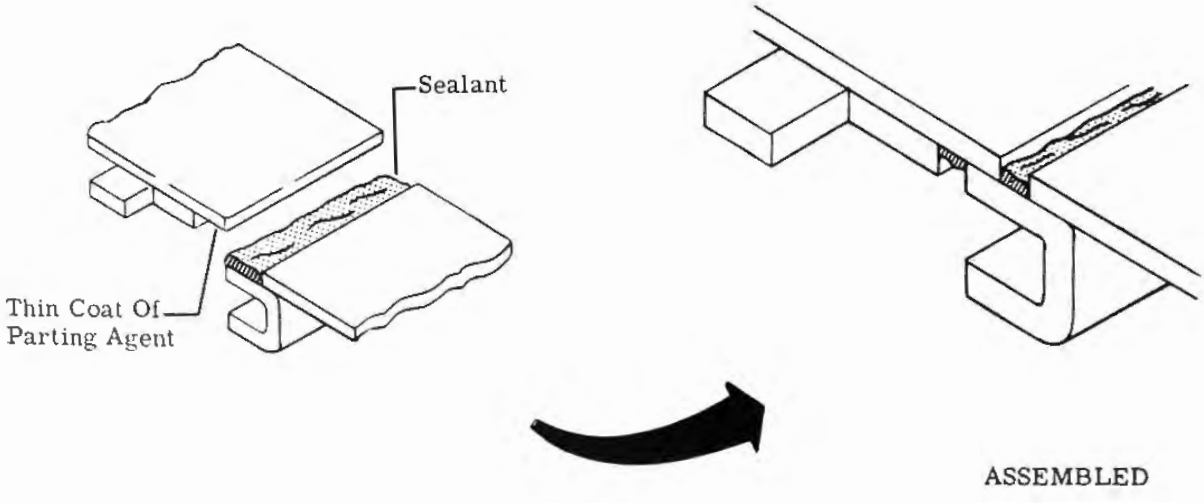

DETAIL B

Figure 2-33. Faying Surface Seal Application

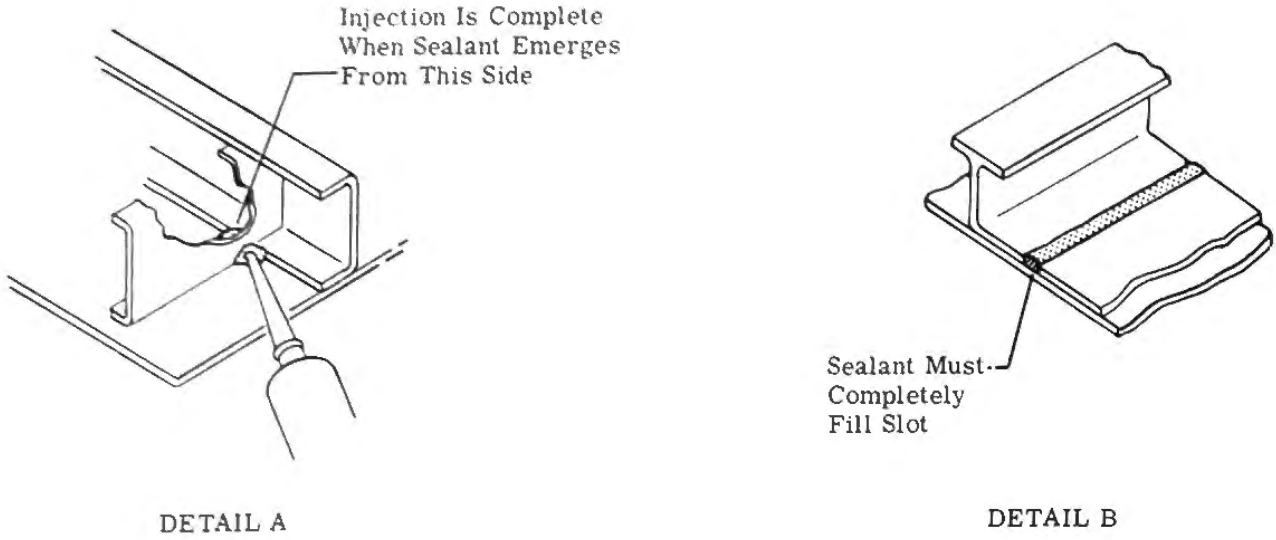

Figure 2-34. Injection Seal Application

APPLYING HOLE AND SLOT SEAL.

a. Seal all tool and coordination holes that are not plugged with soft rivets because of inaccessibility.
b. Overcoat rivets in absolute sealed areas with the appropriate sealant.
c. Apply hole filling compound to the pressure side of the hole. (See figure 2-35.)
d. Back large slots and holes with masking tape.
e. Remove the tape after the sealant is formed.
f. Apply compound to the pressure side of the hole with spatula or suitable tool.
g. Pack compound firmly into space being filled.
h. Smooth the applied compound and feather into all contacting surfaces.

APPLYING FILLET SEAL.

a. Apply sealant with a sealant gun.
b. Point nozzle tip into the seam and maintain the line of travel.
c. Force a bead of sealant ahead of the nozzle tip. (See detail A, figure 2-36.)
d. Press sealant firmly into place with a fairing tool to obtain a shaped and smooth fillet. (See detail B, figure 2-36.)

Note

The nozzle tip may be cut and shaped to give a full bodied seal contour. For typical finished fillet dimensions, see detail C, figure 2-36.

e. Obtain final configuration by forming the fillet with a fairing tool.
f. Press tool against the sealant and move parallel to the bead.

Note

Care must be exercised so that folds, flaps and entrapped air are not created during working. Any evident air bubbles must be worked out. At the completion of working, which must occur before end of work life, the bead should have the shape of a faired fillet of approximately the proper size and be quite smooth.

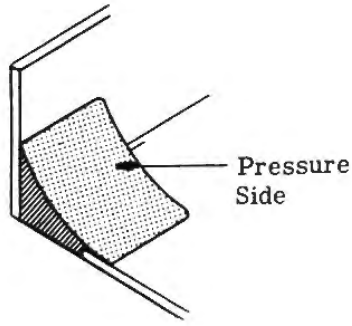

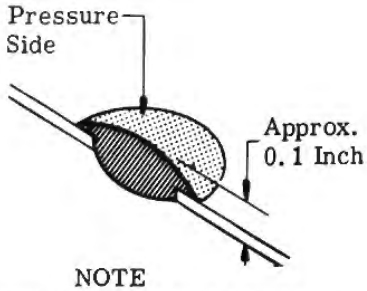

NOTE

The maximum hole size that can be filled with this material is 0.125 ". Larger holes should be backed by metal patches, and then fillet sealed to prevent leakage.

Figure 2-35. Hole and Slot Filling

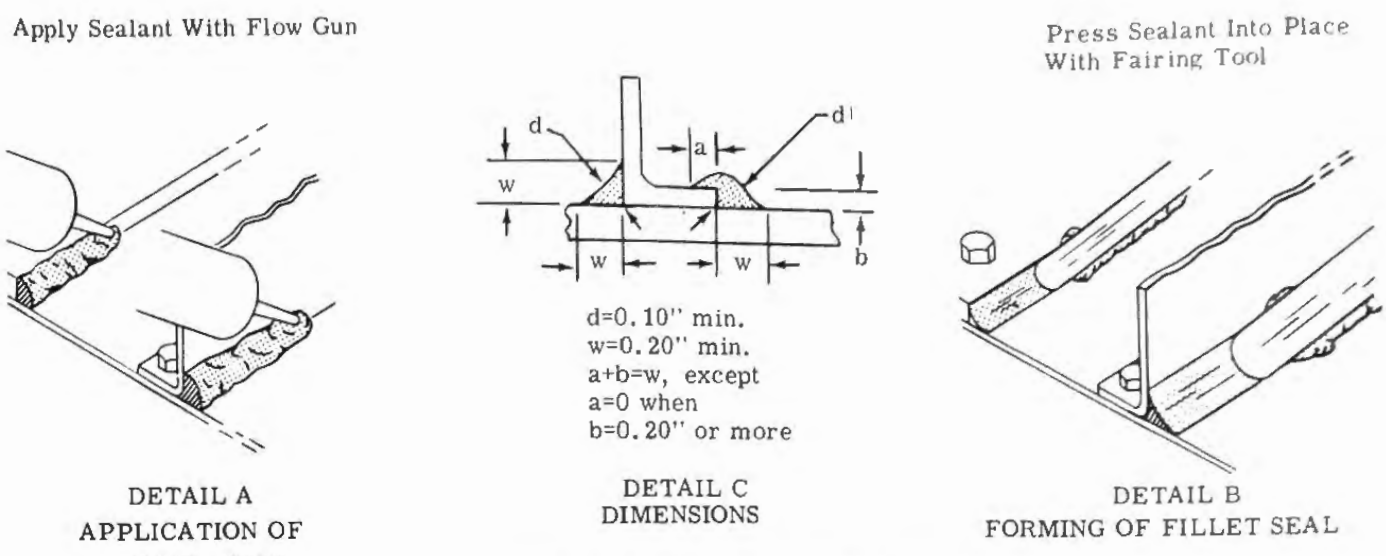

Figure 2-36. Fillet Seal Application

APPLYING FASTENER SEAL.

a. Seal all fasteners installed through a faying surface seal after the sealant work life has been exceeded, and fasteners installed through a seal plane where no faying surface sealant is used, by filleting around fastener after installation. (See figure 2-37.)

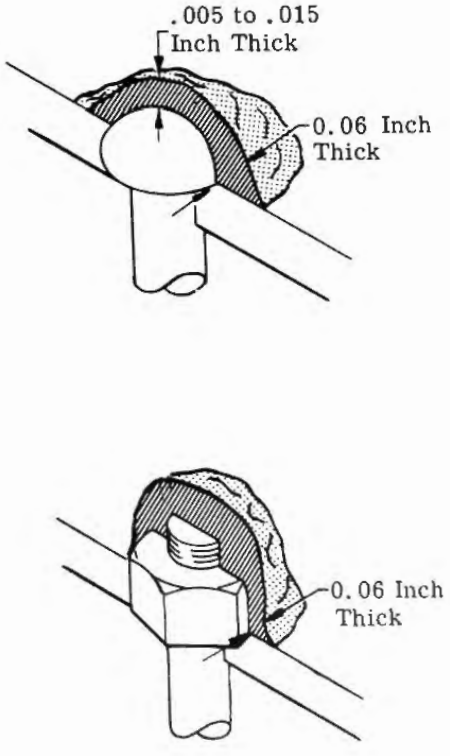

Figure 2-37. Fastener Seal Application

APPLYING ELECTRICAL SEAL FITTING.

a. Clean the area where seal fittings will seal.
b. Pass wire bundle through the cutout provided.
c. Place seal fitting halves around wires in the bundle with flanges on the on-pressure side. (See detail A, figure 2-38.)
d. Fill the groove in the mounting flanges with sealant.

Note

Use sufficient sealant to assure that sealant extrudes continuously around the mounting flanges after they are secured to the bulkhead.

e. Secure fittings to bulkhead with fasteners.
f. Remove any excess sealant which extrudes from the mounting flanges. (See detail B, figure 2-38.)
g. Place a strong piece of string about 8 inches long against the seal assembly parallel with the wires.
h. Wrap fitting halves with three turns of 1-1/2 inch wide masking tape. (See detail C, figure 2-38.)
i. Crimp the 1-1/2 inch wide masking tape around the seal assembly ends so as to center the wire bundle.
j. Wrap crimped end with three turns of 3/4 inch masking tape. (See detail C, figure 2-38.)
k. Puncture the paper masking tape over the most convenient injection hole in the seal fitting.
l. Inject sealant using a sealant gun.
m. Seal over the seal fitting fasteners.
n. Remove tape after sealant has cured (16 to 24 hours) by pulling rip string and unwinding.
o. Where a cover plate is used to cover an unused opening, apply a faying surface seal between plate and structure.

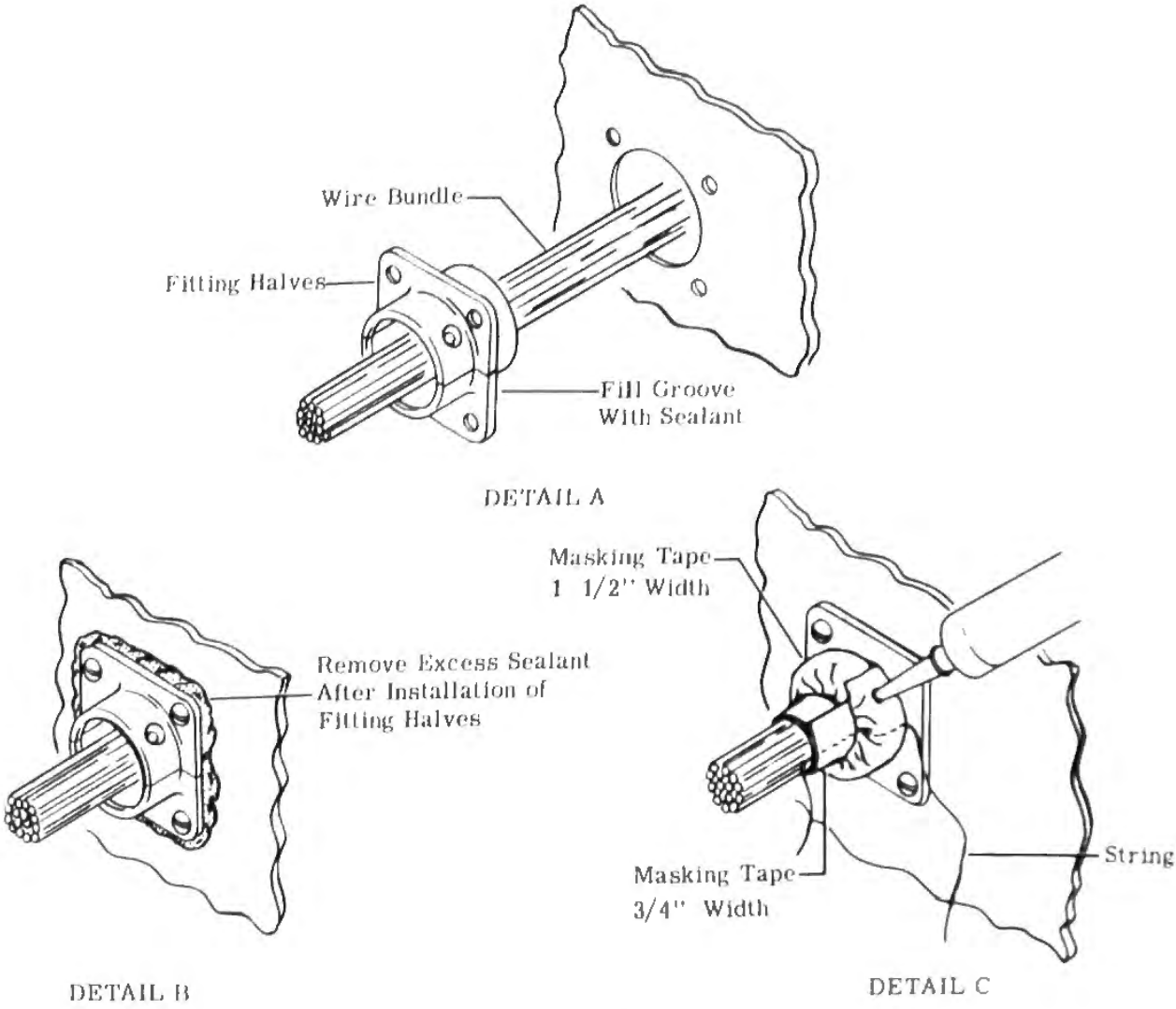

Figure 2-38. Electrical Seal Fitting Application

APPLYING PYLON AND FIREWALL SEALANT. (See figure 2-39.) The engine pylons are sealed on assembly by applying faying surface seals under the entire perimeter of the pylon fairing, under the skin splice joints, and between the trailing edge skins. Brush a thin continuous coat of Dow Corning 1200 primer on all surfaces to be sealed. Allow primer to air dry for at least 30 minutes, and apply fillet seals with Q-93-004 sealant around all openings where the engine beam assemblies protrude through the firewall. The faying surface and fillet seals should be applied using the procedure described in previous paragraphs. Allow firewall sealant to air dry for at least 72 hours before applying heat.

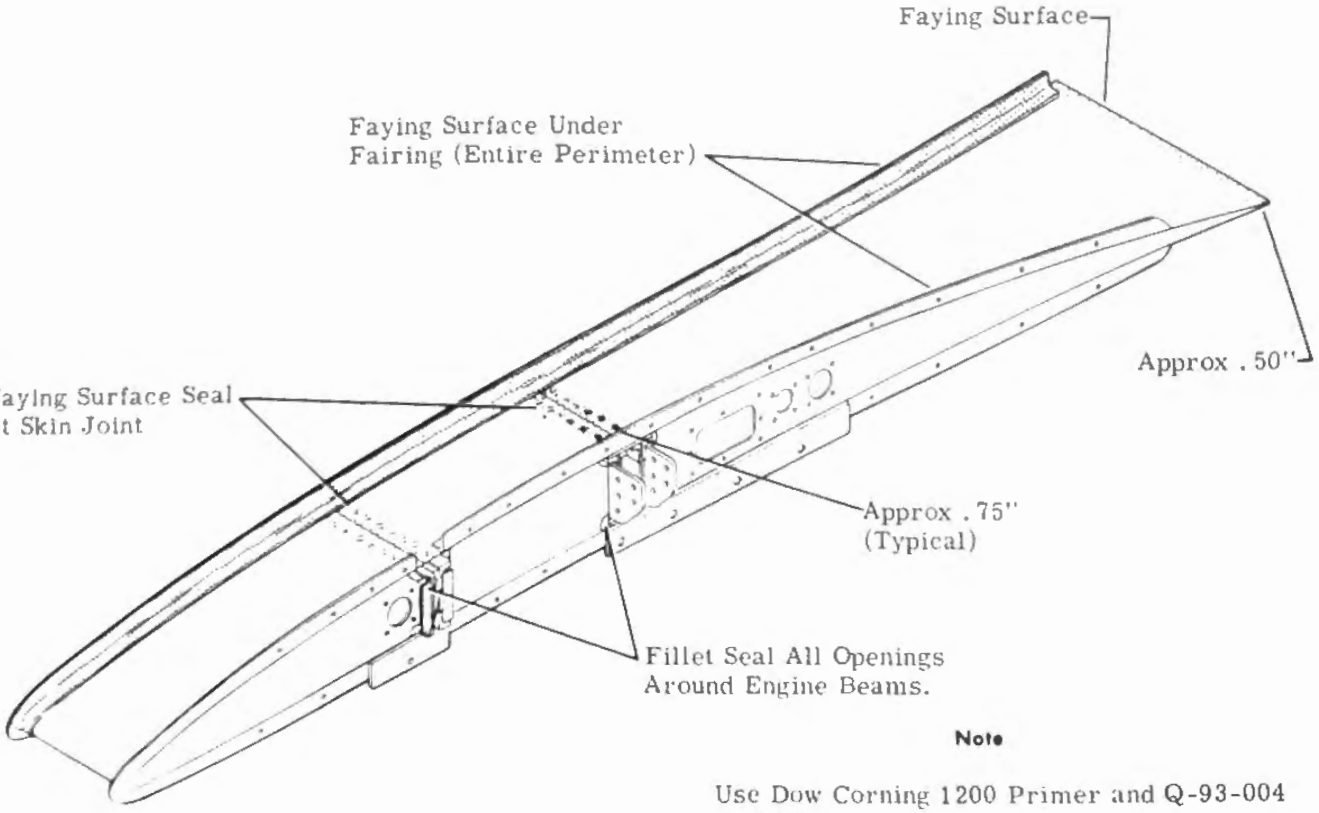

Note

Use Dow Corning 1200 Primer and Q-93-004 Sealant Only.

Figure 2-39. Firewall Seal Application

NOSE CONE EROSION SHOE REMOVAL AND INSTALLATION.

a. General. An erosion shoe is installed over the forward portion of the nose cone. The erosion shoe protects the nose cone from weather erosion and other damage.

b. Materials Required.

1. Erosion Shoe (B. F. Goodrich P/N 3A1679).
2. EC-1403 or EC-1300L Cement (manufactured by Minnesota Mining & Manufacturing Co.).
3. Scissors or "V" Knife.
4. Toluol.
5. Methyl Ethyl Ketone (referred to in the text as MEK).
6. Cloths - Clean and lint-free.
7. 2-Inch Sponge Roller.
8. Paint Brush.
9. Flexible Straightedge.
10. No. 22 Gage Hypodermic Needle.

c. Removal.

Note

The longer the erosion shoe has been cemented to the nose cone the more difficult it will be to remove. It is easier to remove the shoe in pieces and then wash the cement from the nose cone.

CAUTION

The cements and solvents used for removal and installation of the erosion shoe are flammable and their fumes are toxic. All work should be done in a well-ventilated area away from any sparks or flame.

1. Clean nose cone along aft edge of erosion shoe with MEK. Apply masking tape on nose cone along the edge of the erosion shoe. This will establish the trim line for the new shoe.
2. Apply MEK to aft edge of the erosion shoe. Allow approximately 2 minutes for cement to soften.
3. Slowly peel the erosion shoe away from the nose cone while applying MEK along the separation line.
4. After the erosion shoe has been removed, clean cement from the nose cone using a clean cloth and MEK.

d. Installation.

Note

Installation must be accomplished in an area where the ambient temperature is between 40° and 110° F and the humidity is below 95%.

1. Clean the nose cone surface thorougly with a clean cloth moistened with MEK. Final cleanthe nose cone by wiping off the MEK before it dries using a clean dry cloth. Repeat the final cleaning operation at least twice.

Note

The erosion shoes are dusted before packing to prevent the shoe inner surface from sticking together. The surfaces must be cleaned to assure proper bonding to the nose cone.

2. Thoroughly clean surfaces of the erosion shoe using a clean cloth moistened with MEK. Change cloths frequently to avoid contamination of cleaned areas.
3. Mix cement by combining two parts of cement to one part of MEK. Mix thoroughly.
4. Apply one even brush coat of cement to both the inside (rough) surface of the erosion shoe and the nose cone surface up to the masking tape.

Note

The cement must be applied evenly on both surfaces to assure that the outside surface of the erosion shoe will be smooth.

5. Allow the first coat to air dry a minimum of 30 minutes. If temperature is below 50° F, allow 1 hour drying time.
6. Apply a second coat of cement to both surfaces. Allow at least 1 hour drying time or until adhesive is dry and tack-free.
7. Using a flexible straightedge, draw a vertical centerline on the nose cone to match the vertical centerline on the inside of the erosion shoe.
8. Position the erosion shoe on the nose cone with the two cemented surfaces against each other. With the shoe positioned on the nose cone, align the reference lines.
9. Fold the erosion shoe back on itself being careful not to move the erosion shoe with respect to the nose cone.

Note

- When cementing, activating, and rolling erosion shoe on nose cone, work from the nose up. Do not attempt to put down one side completely before working on the opposite side.

- Avoid twisting or sharp creasing of the erosion shoe, otherwise cement may be pulled loose from one of the surfaces. In the event it becomes necessary to remove or loosen installed shoe, use Toluol to soften the "adhesion" line. A minimum amount of Toluol should be applied to the parting line while slight tension is applied to the shoe. In peeling back the erosion shoe, removal should be slow enough to allow the solvent to separate the interface of the cement coats. If the cement is pulled loose from either the nose cone or the shoe, the area shall be recemented.

- Care must be exercised to assure that all areas are activated and that no areas are left dry.

10. Using a clean lint-free cloth, thoroughly moistened (but not dripping) with Toluol, activate the cement on the nose of the shoe. Activate a small area on both the nose cone and erosion shoe. Avoid excessive rubbing which could remove cement from surfaces. The activation of the cement shall be done in areas of concentric circles starting at the nose cone.
11. After cement loses "webbiness" and becomes "tacky," use sponge roller and roll activated part of shoe against the nose cone. Care must be exercised to prevent trapping air between the shoe and nose cone. Match the reference lines as the shoe is rolled down. Avoid stretching the shoe, otherwise difficulty will be encountered around the trailing edge.
12. With the loose part of the erosion shoe rolled back, activate a section adjacent to the bonded area using the same procedure as in step 10.
13. When the cement has reached the right stage of tack, roll the section of the shoe as in step 11.
14. Continue in this manner until the erosion shoe is completely installed, then roll the entire surface with the sponge roller. Apply pressure and roll from the nose toward the trailing edge of the shoe.
15. Lift excess trailing edge material up along the tape all the way around the circumference. Using a "V" knife or a pair of scissors with the blades open slightly to form a "V," cut off erosion shoe directly at the trim line by sliding scissors or knife along. Keep uniform tension on trim material.
16. If an air pocket or blister is formed, insert a hypodermic needle into the pocket and roll to force out the air.
17. Inspect the tapered edge to see that it is firmly cemented all around.
18. After the cement has dried, remove masking tape and clean excess cement from nose cone, using MEK. Care must be exercised to prevent solvent from running under and loosening edges of shoe.

X RAY INSPECTION. In accordance with current inspection intervals, Section VIII, portions of the aircraft structure are to be X ray inspected. Items included in this inspection are the pressurized portion of the fuselage, wing center splice, lower wing skin around fuel pump cutouts, elevator ribs, door hinges, horizontal stabilizer, vertical stabilizer and pylon. The following information and procedures have been provided as an aid in X ray inspection. Information has not been provided for the actual operation of X ray equipment due to the many types of equipment. For information on specific equipment, refer to the manufacturer's operating and maintenance instructions.

X RAY INSPECTION PRECAUTIONS. When using X ray equipment, be familiar with the manufacturer's operating instructions and pay particular attention to warnings and precautions. It is recommended that a remote warning light be used with X ray equipment to alert personnel of existing danger. A remote warning light receptacle is generally provided on the X ray control unit. The following warnings are general and additional warnings may be listed in the manufacturer's instructions.

WARNING

- Dangerous radiation exists during operation in the immediate area of the X ray tube head.
- Do not approach within the manufacturer's specified distance of tube head when exposure light is illuminated on the control unit.
- Always attempt to expose film with tube directed away from control panel.
- A radiation monitor should be used during exposure to warn personnel of radiation hazards.
- Lethal voltages exist within the equipment. Do not attempt to perform maintenance on the equipment while it is connected for operation.
- Assure that all personnel in the immediate area are instructed to stay away from all X ray operations according to manufacturer's specified distance.

X RAY INSPECTION - AIRCRAFT PREPARATION. Since the requirement for X ray inspection occurs at the same time as wing removal and inspection, it is recommended that the X ray inspection be performed while the wing is removed. This permits easier access to areas which would normally be difficult to get to. In addition, Section VIII requires X ray inspection of the wing which is easily performed with the wing removed. Inspections being performed at the same interval as X ray inspection, require removal of almost all of the interior equipment. It is recommended that the X ray inspection of the fuselage be performed at a time when most of the interior equipment is removed. Any equipment which has not been removed for inspection purposes, and is in an area to be X rayed, must be removed. Foam does not normally affect X rays, therefore, removal of foam is not required unless verification of a crack is required.

X RAY FILM HANDLING. Because airframe structure consists generally of curved surfaces, a flexible film holder is used for X ray inspection of the aircraft. Flexible film holders are usually constructed of either cardboard or plastic and consist of a hinged front and back cover with an inner light tight envelope. These film holders are available in standard film sizes and are relatively inexpensive. Another advantage to using flexible film holders is that their thickness makes them easier to handle in large quantities. Flexible film holders may be reused, however, before reloading, open the holder and check for light leaks. Any holders which are physically damaged must be repaired or discarded. Remove any lint or dust with a dry, lint free cloth. Do not blow dust out since moisture could collect in the holder and be transferred to the film. After film is loaded into film holder, the holder must be sealed with a light proof tape such as Scotch #235 photographic tape.

DETERMINING FILM TYPE, EXPOSURE AND DISTANCE. Using X ray equipment with a minimum amount of lost time requires a set of exposure technique charts from which exposure may be determined for various thicknesses of material under given conditions. These exposure technique charts are generally available from the manufacturers of X ray machines and vary slightly in data between types of machine. In order to adequately identify exposure technique charts, the following items must be recorded.

a. Type and thickness of material.
b. Film type.
c. Use of screens (if any).
d. Kilovoltage.
e. Current and exposure time.
f. Source-to-film distances.
g. Developing time and temperature
h. Film density of X rays.

Only when all conditions used in making an X ray agree exactly with the conditions of the exposure chart, can values be read directly from the exposure technique chart. Any variation will require correction factors.

X raying a section consisting of several thicknesses, such as an airframe, creates a problem which can only be solved by determining film exposure speed

which is best suited to the particular application. In other words, kilovoltage, milliamperes and exposure time must be adjusted so that the X ray shows the thinnest part with a maximum acceptable density and the thickest part with a minimum acceptable density. Because airframe section thicknesses vary, the exposure technique charts can serve only as a rough guideline for airframe sections. Figures 2-40 thru 2-43 have been provided as an aid in determining material type and thickness and will provide a guide for determining X ray exposure.

In some instances X ray inspection will require multiple X rays to be taken of a part due to extreme variance in part thickness. Loading the film holder with two or three high contrast films of different speeds is a method which is used to eliminate multiple exposures. A kilovoltage, milliampere and exposure time should be chosen so that the thickest portions of the part are recorded on the faster film and the thinnest portions of the part are recorded on the slower film.

X RAY PROCEDURE - GENERAL.

a. Determine thickness and type of material in the area to be X rayed. (Refer to figures 2-40 thru 2-43.)

b. Determine what exposure is necessary using exposure technique charts.

c. Locate film on area to be inspected.

Note

Taping flexible film holder to the aircraft skin is the usual manner in which film is held in place.

d. Position X ray tube on opposite side of structure so that beam is aligned with the structure to be X rayed.

e. Observe all safety precautions.

f. Expose film.

Note

If the area to be inspected requires a series of X rays, it is recommended that a test shot be made and developed to assure that the series of X rays will be acceptable.

g. Remove film from aircraft and develop using standard X ray film developing procedures.

X RAY INTERPRETATION. Interpreting an X ray is one of the most difficult tasks involved in X ray inspection. Fatigue cracks in aircraft structure may occur in the form of fine, hairline cracks which are the most difficult to detect. Usually, in order to detect hairline cracks, the X ray beam must be almost parallel to the plane of the crack in order to record it on film. In order to properly interpret an X ray, one must have a complete knowledge of X ray techniques and aircraft structure. Some questionable defects may show up in an X ray which are not defects at all. Some of these false defects include scratches in paint or on surface of a part, discontinuities in sealant, cracks in paint or aerodynamic filler and foreign objects such as drill shavings. Experience in reading X rays is the only way to learn to spot these false defects. In some cases the only way to define a false defect is to visually examine the part in question, which may include removal of paint and/or aerodynamic filler and foam.

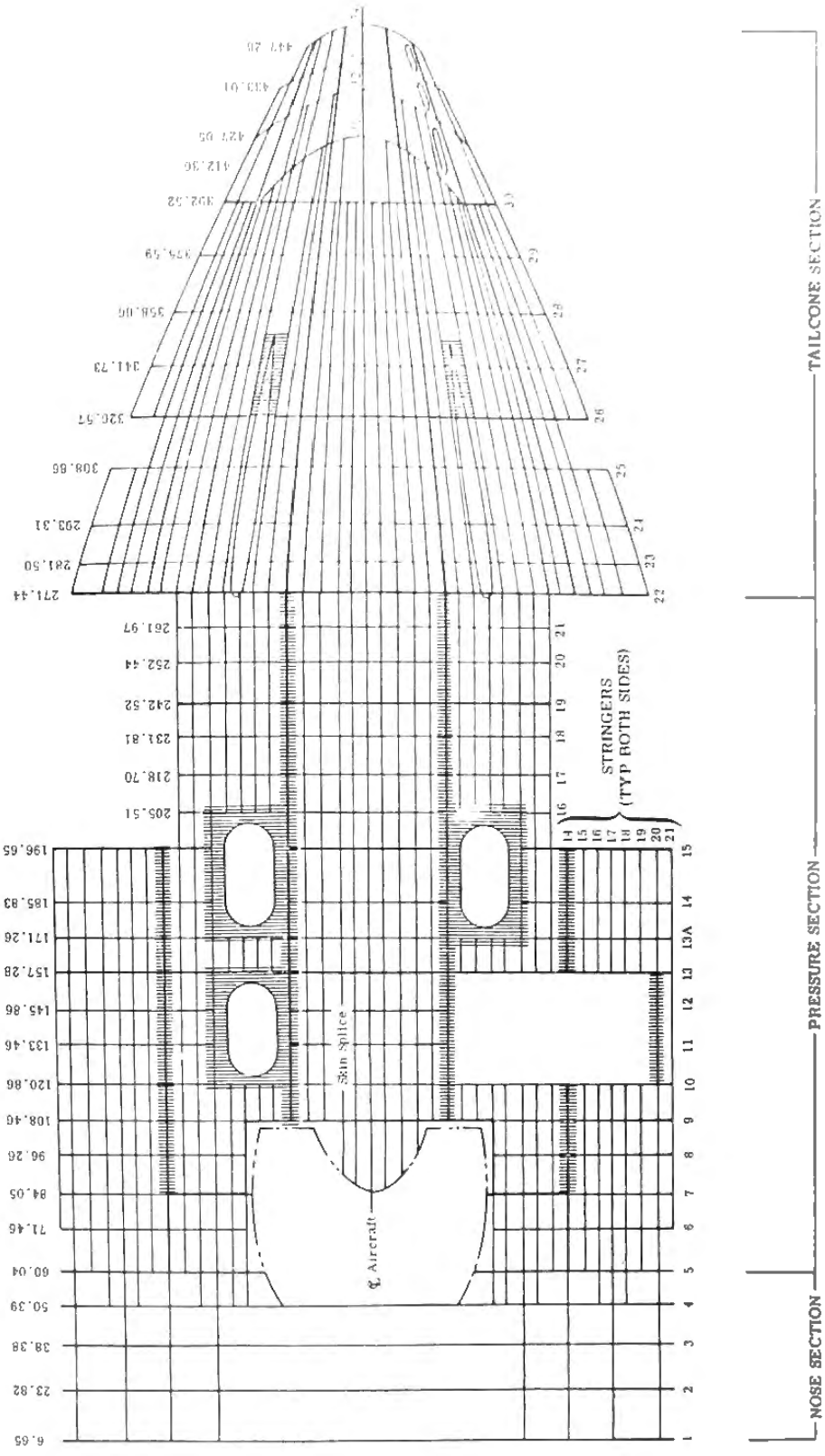

Figure 2-40. Fuselage (Sheet 1 of 3)

Fuselage Thickness Data

Item	Location	Thickness	material
Skin	Fwd of fr 4	.032	2024 Al
Skin	Between fr 4 & fr 30	.040	2024 Al
Skin	Aft of fr 30	.050	2024 Al
Circum Skin Splice		.020	301 SS
Frame Flange	General	.063 or .080	2024 Al
T-Stringer	General	.118	2024 Al
L-Stringer	General	.050	2024 Al
Pylon Skin	Pylon T. E.	.032 or .036	321 SS
Pylon Former	Pylon T. E.	.032	2024 Al

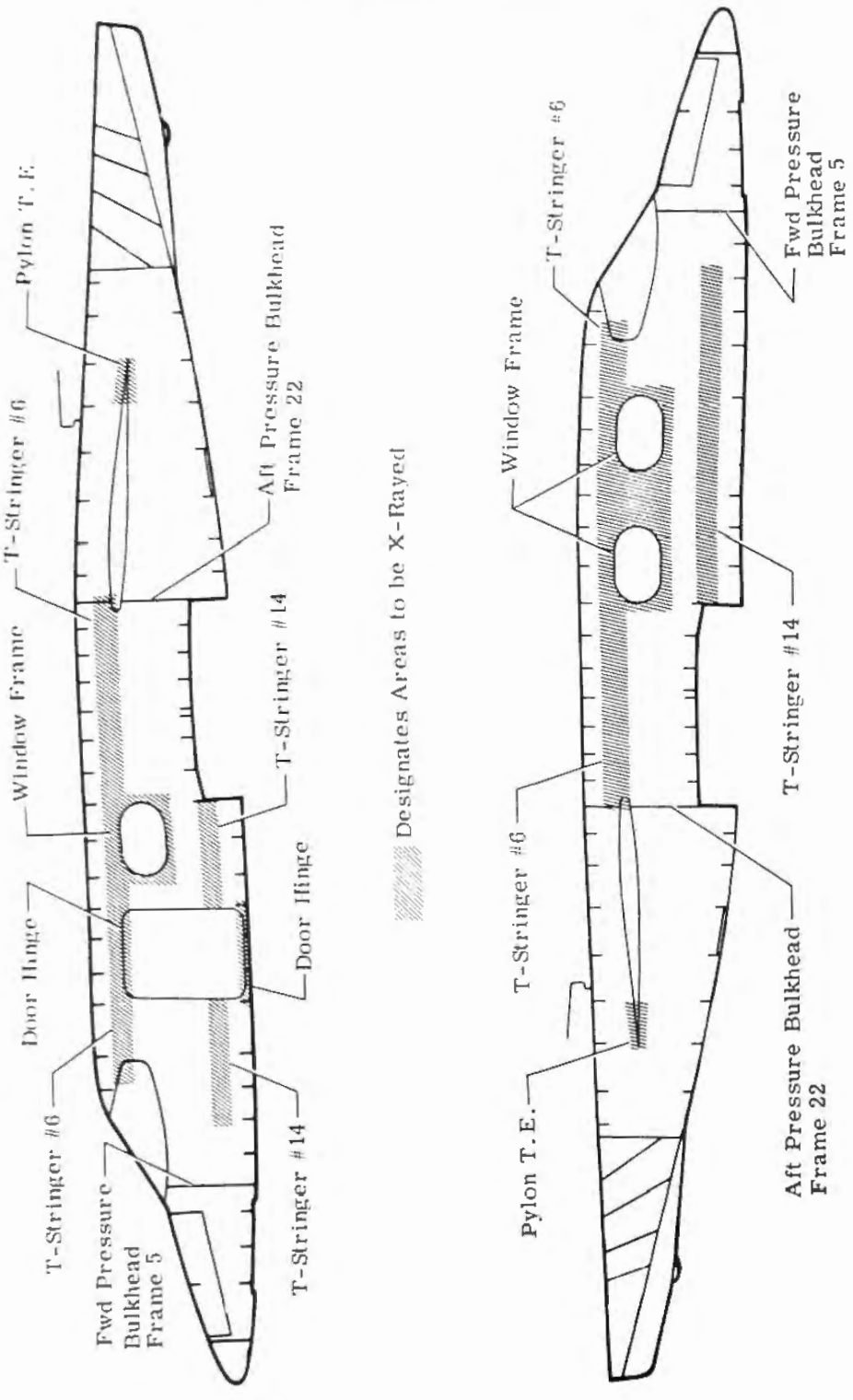

Figure 2-40. Fuselage (Sheet 2 of 3)

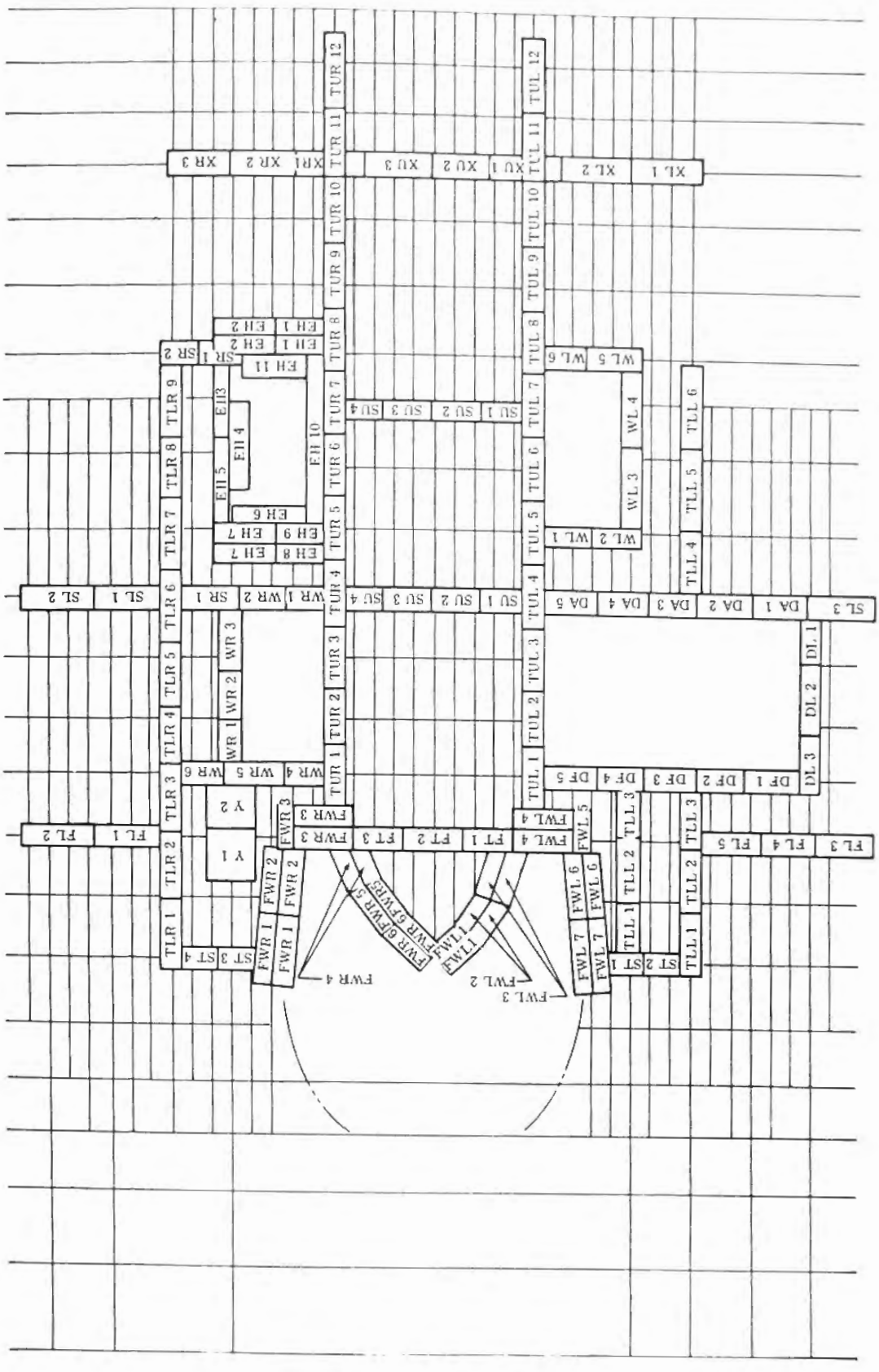

X RAY LAYOUT SAMPLE

Figure 2-40. Fuselage (Sheet 3 of 3)

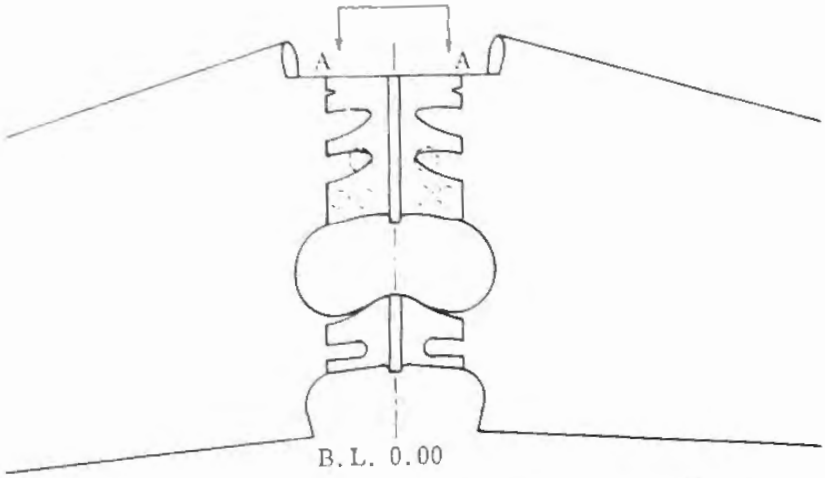

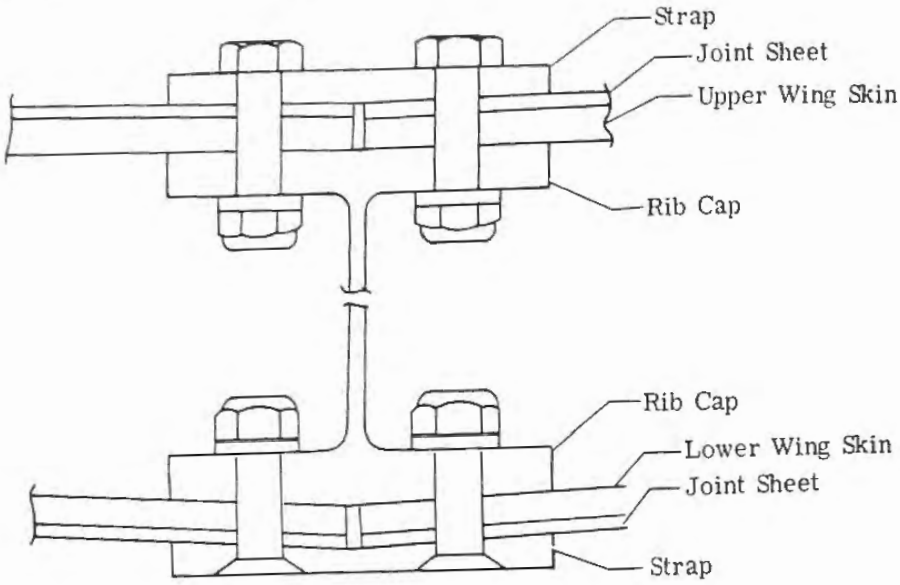

SECTION A-A

Location	item	thickness (in.)	mat'l
Upper Fwd Splice			
	Strap	.200	2024 Al
	Joint Sheet	.080	2014 Al
	Skin	.127	2014 Al
	Rib Cap	.298	2024 Al
Lower Fwd Splice			
	Strap	.160	2024 Al
	Joint Sheet	.080	2024 Al
	Skin	.090	2014 Al
	Rib Cap	.350	2024 Al
Upper Aft Splice			
	Strap	.200	2024 Al
	Joint Sheet	.080	2014 Al
	Skin	.127	2014 Al
	Rib Cap	.298	2024 Al
Lower Aft Splice			
	Strap	.160	2024 Al
	Joint Sheet	.080	2014 Al
	Skin	.090	2014 Al
	Rib Cap	.350	2024 Al

Figure 2-41. Wing Centerline Splice

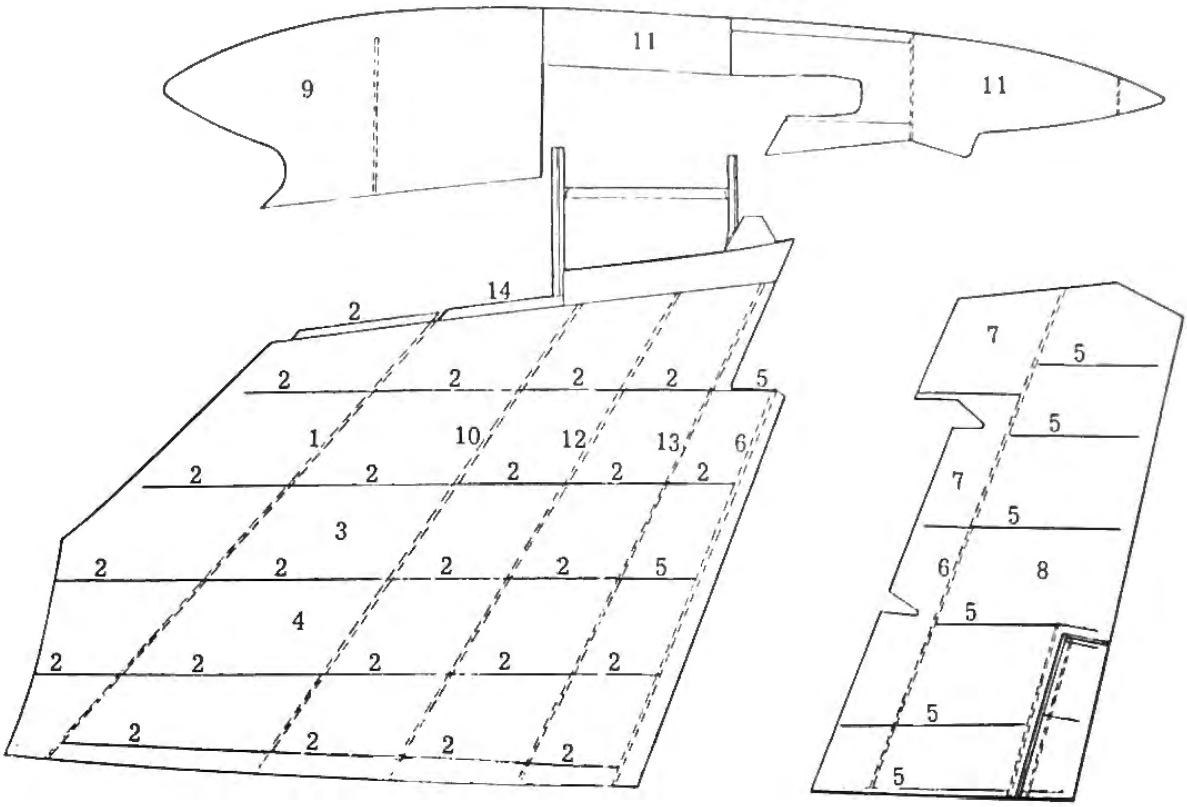

Thickness Details		
Item	thickness (in.)	mat'l
1-Spar	.050	2024 Al
2-Rib	.032	2024 Al
3-Skin	.040	2024 Al
4-Skin	.050	2024 Al
5-Rib	.050	2024 Al
6-Spar	.063	2024 Al
7-Skin	.032	2024 Al
8-Skin	.040	2024 Al
9-Fairing	.032	6061 Al
10-Spar	.250	2014 Al
11-Fairing	.070	Fiberglass
12-Spar	.170	2014 Al
13-Spar	.140	2014 Al
14-Rib	.098	2024 Al

Figure 2-42. Vertical Stabilizer

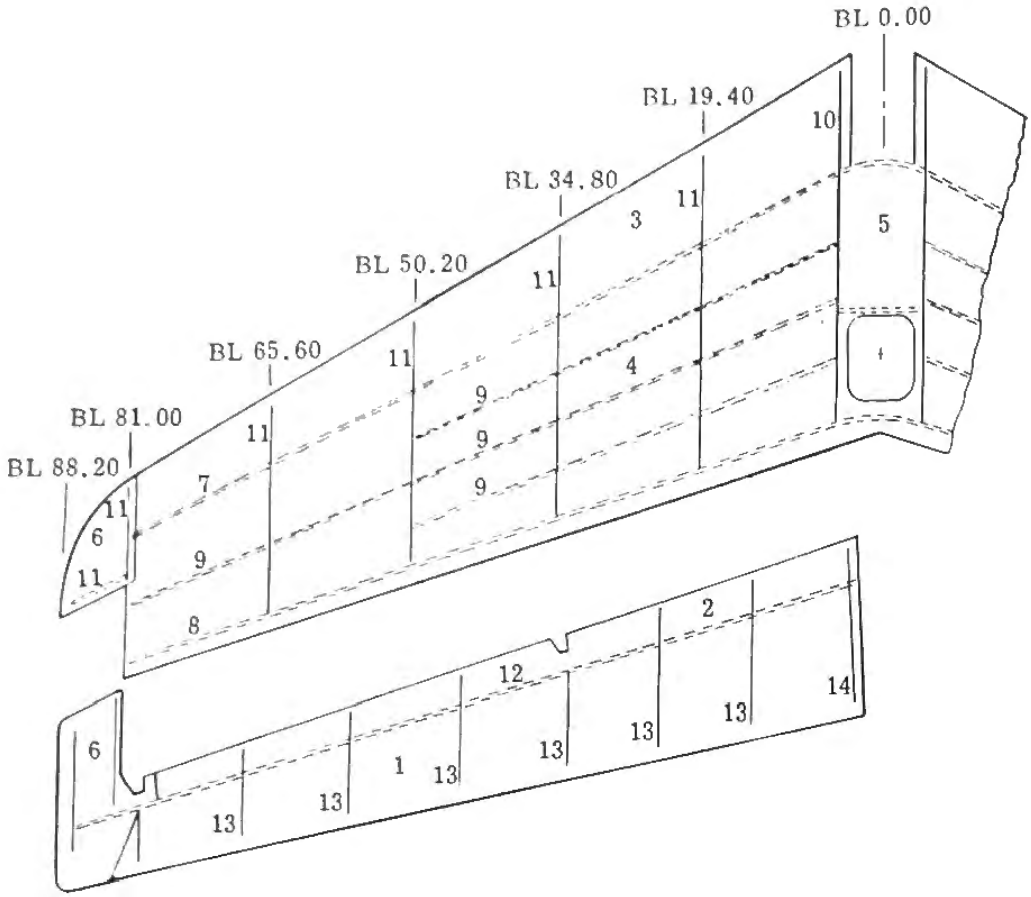

Thickness Details		
Item	thickness (in.)	mat'l
1-Skin	.025	2024 Al
2-Skin, L.E.	.032	2024 Al
3-Skin, L.E.	.040	2024 Al
4-Skin	.050	2024 Al
5-Skin	.063	2024 Al
6-Skin, Tip	.040	6061 Al
7-Spar	(See spar thickness chart)	
8-Spar	(See spar thickness chart)	
9-Stringer	.050	2024 Al
10-Rib	.250	2024 Al
11-Rib	.032	2024 Al
12-Spar	.063	2024 Al
13-Rib	.032	2024 Al
14-Rib	.032	4130 St

Spar Thickness Chart			
Spar	B.L.	thickness (in.)	mat'l
Front	6.00	.400	2024 Al
Front	11.02	.212	2024 Al
Front	55.12	.080	2024 Al
Front	81.00	.080	2024 Al
Rear	6.00	.400	2024 Al
Rear	11.02	.280	2024 Al
Rear	22.05	.160	2024 Al
Rear	33.07	.125	2024 Al
Rear	55.12	.080	2024 Al
Rear	81.00	.080	2024 Al

Figure 2-43. Horizontal Stabilizer and Elevator

Learjet Temporary Service Manual Revision

MANUALS AFFECTED: Gates Learjet Models 23, 24 and 24D/E/F Service Manuals.

FILING INSTRUCTIONS: Insert as listed below and retain until further notice.

Model 23 - Insert adjacent to page 2-86.
Model 24 - Insert adjacent to page 2-78.
Model 24D/E/F - Insert adjacent to page 2-97.

REASON: To add Corrosion Repair Procedures.

INSTRUCTIONS: Add the following text to Chapter 2.

CORROSION REPAIR. The following maintenance practices are provided as an aid in repairing fuel tanks if bacterial growth and/or corrosion is evident.

EQUIPMENT AND MATERIALS.

a. Chemical Film Coating - Turcoat Accelogold - Turco Products, 24600 S. Main St., Carson, Calif. 90749.
b. Chemical Film Coating - Iridite 14-2 - Allied-Kelite Products Div., Richardson Chemical Co., 2400 E. Devon Avenue, Des Plaines, Ill. 60016.
c. Chemical Film Coating - Alodine 1200S - Amchem Products Inc., Brookside Ave., Ambler, Pa., 19002.
d. Chemical Film Coating - Divercoat 7T - Diversey Chemicals, 1855 S. Mt. Prospect Rd., DesPlaines, Ill. 60018.
e. Chemical Film Coating - Bonderite 723 - Specialty Chemical Group, Oxy Metal Ind. Corp., 32100 Stephenson Hiway, Madison Heights, Mich. 48071.
f. Epoxy Coating - 454-4-1 Base, CA-109 Catalyst, TL-52 Thinner - Bostick-Finch.
g. Methyl-Ethyl-Ketone - TT-M-261.
h. Small Paint Brushes - Soft Natural or Polyester Bristle.
i. White Cotton Cloth.
j. Scrub Brush (Stiff Bristle).
k. Vacuum Source & Suction Hose.

FUEL TANK CLEANING AND REPAIR.

a. Remove Bacterial Brown

1. Using the vacuum source, vacuum up all residue from the tank bottoms. In hard to reach areas flush out residue using a squirt bottle or similar device filled with kerosene.
2. Wipe tanks dry. Allow bacterial growth and tank to thoroughly air dry. Drying may be accelerated by use of air movers.
3. Clean bacterial growth from tanks using a soft bristle scrub brush and clean cloth.
4. After cleaning, inspect area for evidence of coating degradation or corrosion.

b. Corrosion Repair

Note

The following procedures cover minor corrosion (depth of 0.005 inch or less). If corrosion area depth exceeds these limits, contact the Gates Learjet Field Service Dept. for disposition.

1. Corrosion pits of a minor depth (0.005 inch or less) within the tip tank and wing tank areas are removed by lightly sanding with 320 or 400 grit aluminum oxide abrasive paper.
2. Sand an area large enough to assure that all corrosion has been removed.
3. Clean the area with MEK and wipe dry.

Note

Prepare Turcoat chemical film solution by mixing the 0.5 oz. of Turcoat Accelegold per gallon of water. The PH of the solution shall range from 1.5 to 2.1. If PH cannot be maintained, nitric acid may be added.
If other chemical film solutions are used, follow manufacturer's instructions.

4. Brush on chemical film over reworked area and over the adjoining area as far as necessary to produce a continuous film coating.
5. Thoroughly rinse treated area with water, using a brush or sponge.
6. Allow treated area to dry in a temperature range of 60° to 160° F.

Note

Coat with epoxy primer immediately after area is dry.

7. Prepare epoxy finish by mixing three (3) parts of base (P/N 454-4-1) and one (1) part of catalyst (P/N CA-109).
8. Epoxy finish may be thinned if necessary by adding one (1) part thinner (P/N TL-52) to one (1) part epoxy.
9. Allow material to set 45 minutes before using.

Note

Material over eight (8) hours old must be discarded.

10. Do not apply material when temperature is below 60° F or over 85% relative humidity.
11. Apply a thin brush coat of epoxy to treated area, using a soft natural or polyester bristle brush to obtain a continuous smooth coat.
12. Allow epoxy finish to cure for a minimum of 24 hours above 73° F before returning the aircraft to service.

5 January 1978

SECTION III

HYDRAULIC SYSTEMS AND LANDING GEAR

TABLE OF CONTENTS

Title	Page
Hydraulic System	3-2
Hydraulic Reservoir	3-2
Firewall Supply Shutoff Valves	3-2
Hydraulic Pumps	3-2
Check Valves	3-8
Pressure Regulator	3-8
Hydraulic Filter	3-8
Hydraulic Aspirator	3-8
Hydraulic Accumulator	3-8
Relief Valves	3-15
Bleeding Hydraulic System	3-15
Hydraulic Ground Service Quick-Disconnects	3-15
Hydraulic Pressure Indicating System	3-15
Landing Gear Hydraulic System	3-15
Landing Gear Hydraulic System Operation	3-16A
Landing Gear Emergency Extension Air System	3-26A
Directional Control Valves	3-26C
Gear Door Selector Valve	3-27
Landing Gear Selector Valve	3-27
Shuttle Valves	3-27
Priority Valves	3-27
Nose Gear Pressure Boost Valve	3-33
Bleeding Nose Gear Hydraulic System	3-33
Landing Gear System	3-33
Gear Indication	3-34
Nose Landing Gear	3-34
Nose Landing Gear Wheel	3-39
Nose Gear Shock Strut	3-41
Nose Gear Actuator	3-46
Nose Gear Uplatch Mechanism	3-51
Nose Gear Doors	3-54
Nose Wheel Steering System	3-54
Main Landing Gear	3-62
Main Landing Gear Wheels	3-62
Main Gear Shock Strut	3-66
Main Gear Actuator	3-73
Main Gear Inboard Door Uplatch Mechanism	3-78
Main Gear Doors	3-78
Main Gear Inboard Door Actuators	3-81
Brake System	3-83
Anti-Skid Brake System	3-85
Multiple Disc Brakes	3-86
Bleeding Brake System	3-92
Parking Brake System	3-93
Emergency Brake System	3-93
Spoiler System	3-93
Flap System	3-94

HYDRAULIC SYSTEM. (See figure 3-2.) The hydraulic system supplies fluid (MIL-H-5606) under a pressure of 1500 psi to the brake, landing gear, flap, and spoiler systems. Hydraulic fluid for system operation is supplied from a reservoir through firewall shutoff valves to the engine-driven hydraulic pumps. The reservoir is pressurized to approximately 10 psi, during system operation, through a pressure line from the cabin and an aspirator located in the return line between the filter and reservoir. The engine-driven pumps supply fluid through check valves, a filter, and a pressure regulator to the hydraulically operated systems upon demand. An electrically operated auxiliary hydraulic pump, provided for ground operation and standby power, is cycled by a pressure switch plumbed to the A air side (C fluid side) of the accumulator. The accumulator prevents damage to the system by absorbing and dampening pressure surges during operation. System pressure is maintained from 1250 to 1500 psi by a pressure regulator. If pressure increases to approximately 1700 psi, a relief valve opens to dump excess pressure into the return system. A A pressure gage and transmitter on the air side of the accumulator indicates hydraulic system pressure to the crew members and, at zero hydraulic pressure, the accumulator air charge is indicated. B A direct reading pressure gage located on the fluid side of the accumulator indicates hydraulic system pressure to the crew members and, at zero hydraulic pressure, there will be no indication on the gage. A direct reading air pressure gage is located adjacent to the accumulator for servicing. Ground service quick-disconnects, located on the right side of the tailcone access opening, are provided for system operation and functional test.

General Maintenance Procedures

CAUTION

Depressurize the hydraulic system before removal of any line or component.

a. Depressurize hydraulic system as follows:
   1. Relieve hydraulic pressure in lines by pumping brakes.
   2. Remove tailcone access door and disconnect both aircraft batteries.
   3. Loosen one of the hydraulic line nuts between the hydraulic reservoir and the 10 psi vent valve to bleed off 10 psi reservoir pressure. When pressure is released, tighten nut.
   4. Loosen nut on accumulator Shrader valve to bleed off air pressure. When pressure is bled off, tighten Shrader valve.

b. Cap or plug all exposed tubing and fittings during maintenance to prevent contamination of systems.

c. When reassembling components, always use new O-rings.

d. Assure that all tubing has correct identification markings and color code.

e. All fittings should be properly aligned prior to connection.

f. Service hydraulic reservoir and accumulator. (Refer to SERVICING HYDRAULIC RESERVOIR and SERVICING HYDRAULIC ACCUMULATOR, Section I.)

g. Service the emergency air bottle if required. (Refer to SERVICING EMERGENCY AIR BOTTLE, Section I.)

SERVICING HYDRAULIC RESERVOIR AND ACCUMULATOR. Refer to Section I for servicing instructions.

HYDRAULIC RESERVOIR. (See figure 3-3.) The reservoir supplies fluid to the aircraft hydraulic system. The unit is an airtight pressurized vessel consisting of a sight glass for servicing purposes and a filler cap attached to the filler neck. The filler neck contains a wire screen type filter to prevent fluid contamination. Reservoir pressure is maintained at approximately 10 psi through a cabin pressure line and an aspirator installed in the return line. Reservoir pressure in excess of 10 psi is vented overboard through a relief valve.

FIREWALL SUPPLY SHUTOFF VALVES. (See figure 3-3.) A firewall supply shutoff valve is installed in the supply line to each engine-driven hydraulic pump. The valves, attached to the reservoir, are provided to stop the flow of hydraulic fluid to the engine pumps in case of an emergency. The ball-type valves, motor-driven by the 28 vdc bus, are controlled by the cover-guarded FIREWALL SHUTOFF switches on the instrument panel.

HYDRAULIC PUMPS. (See figures 3-3 and 5-4.)

a. Engine-Driven Pumps. An engine-driven hydraulic pump, mounted on the accessory gearbox of each engine, supplies fluid under pressure to the hydraulic system. At approximately 8000 rpm, each D gear-type pump delivers 3.80 gpm at 1500 psi, and at approximately 7800 rpm, each E piston pump delivers 2.25 gpm at 1500 psi. The pumps provide positive displacement of hydraulic fluid when the engines are

A Aircraft 23-003 thru 23-014 except aircraft modified by SK23-215.
B Aircraft 23-015 thru 23-099 and aircraft modified by SK23-215.
C Aircraft 23-015 thru 23-099.
D Aircraft 23-003 thru 23-084.
E Aircraft 23-085 thru 23-099.

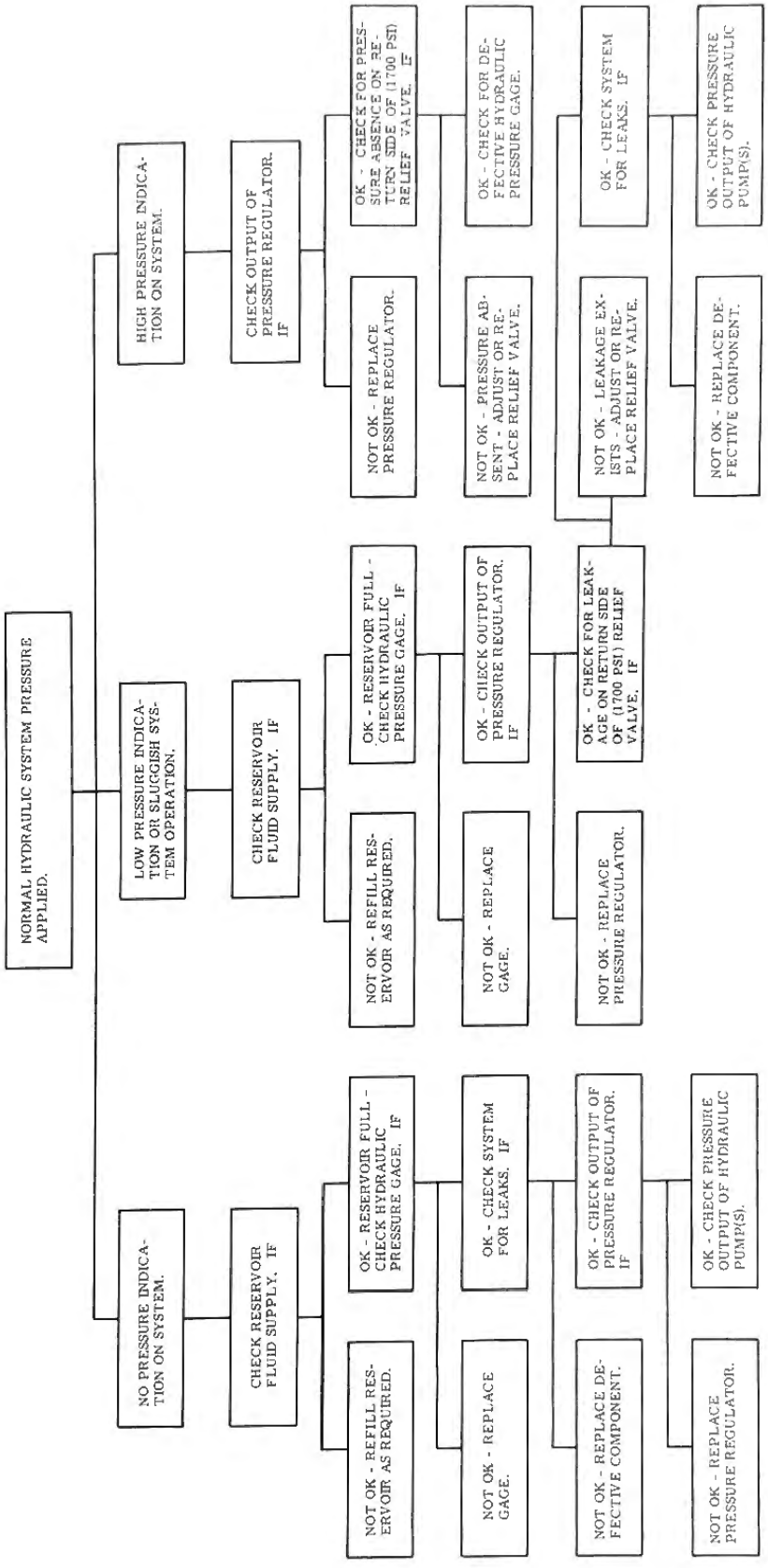

Figure 3-1. Hydraulic System Trouble Shooting

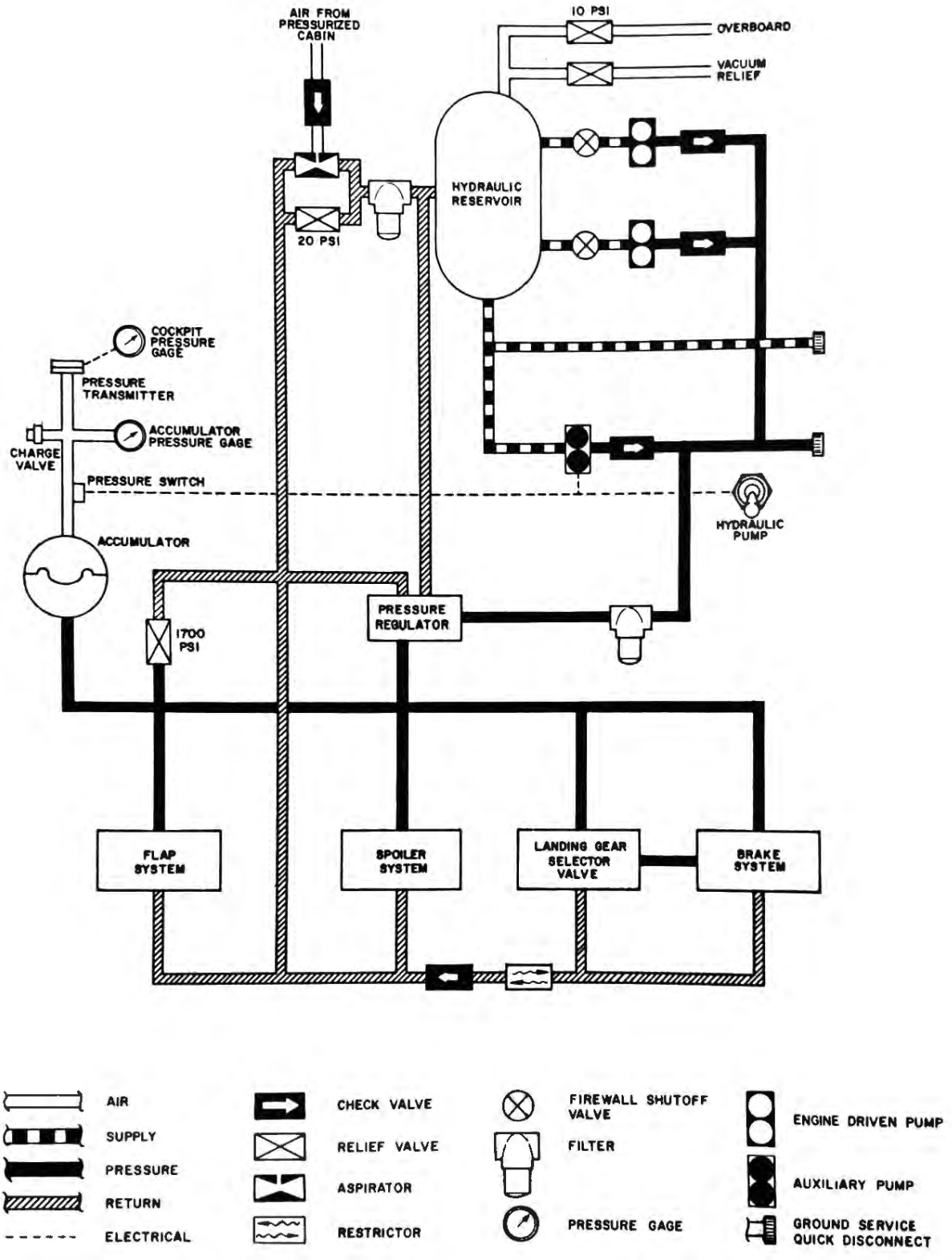

Aircraft 23-003 thru 23-009.

Figure 3-2. Hydraulic System Schematic (Sheet 1 of 4)

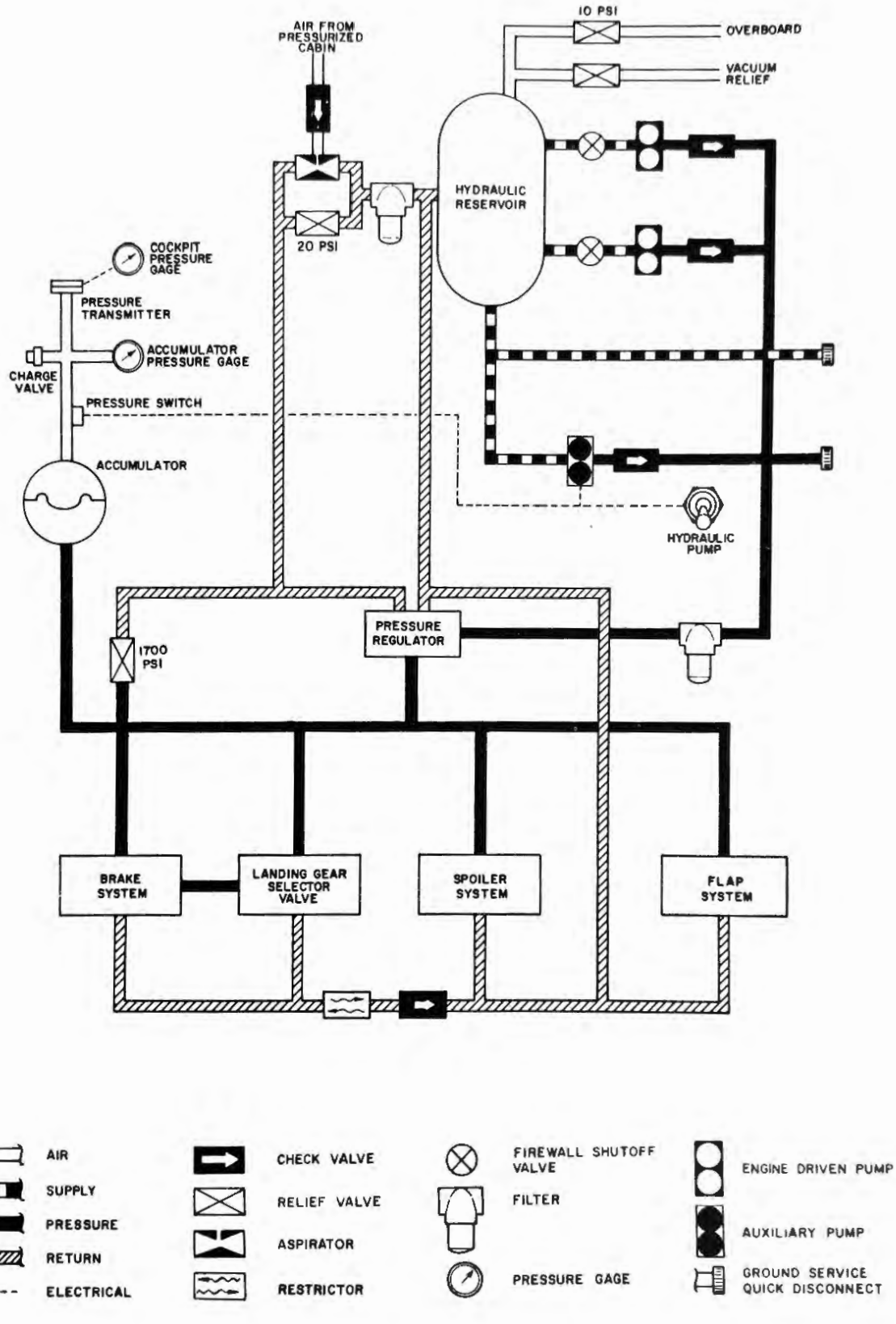

Aircraft 23-010 thru 23-014.

Figure 3-2. Hydraulic System Schematic (Sheet 2 of 4)

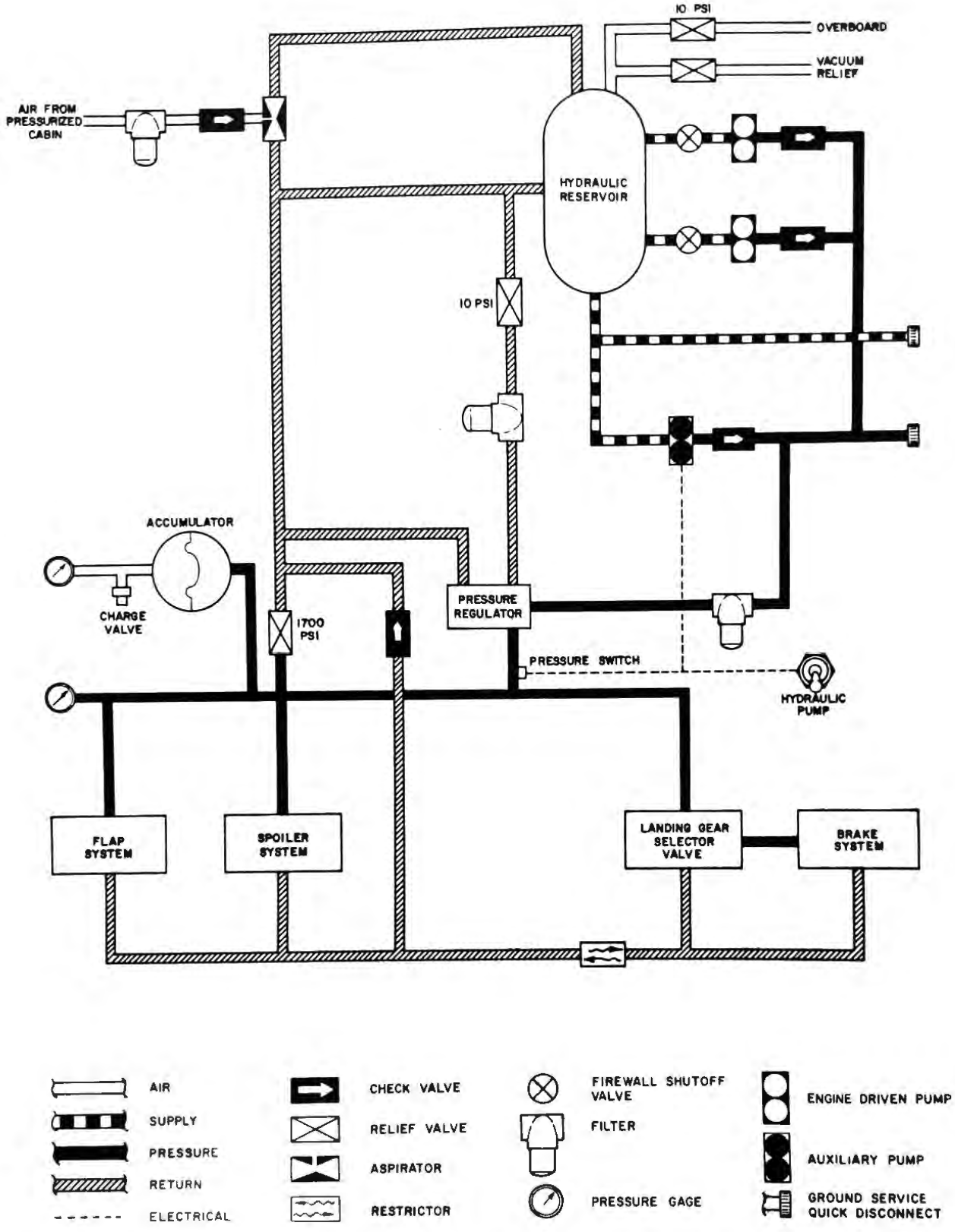

Aircraft 23-015 thru 23-079.

Figure 3-2. Hydraulic System Schematic (Sheet 3 of 4)

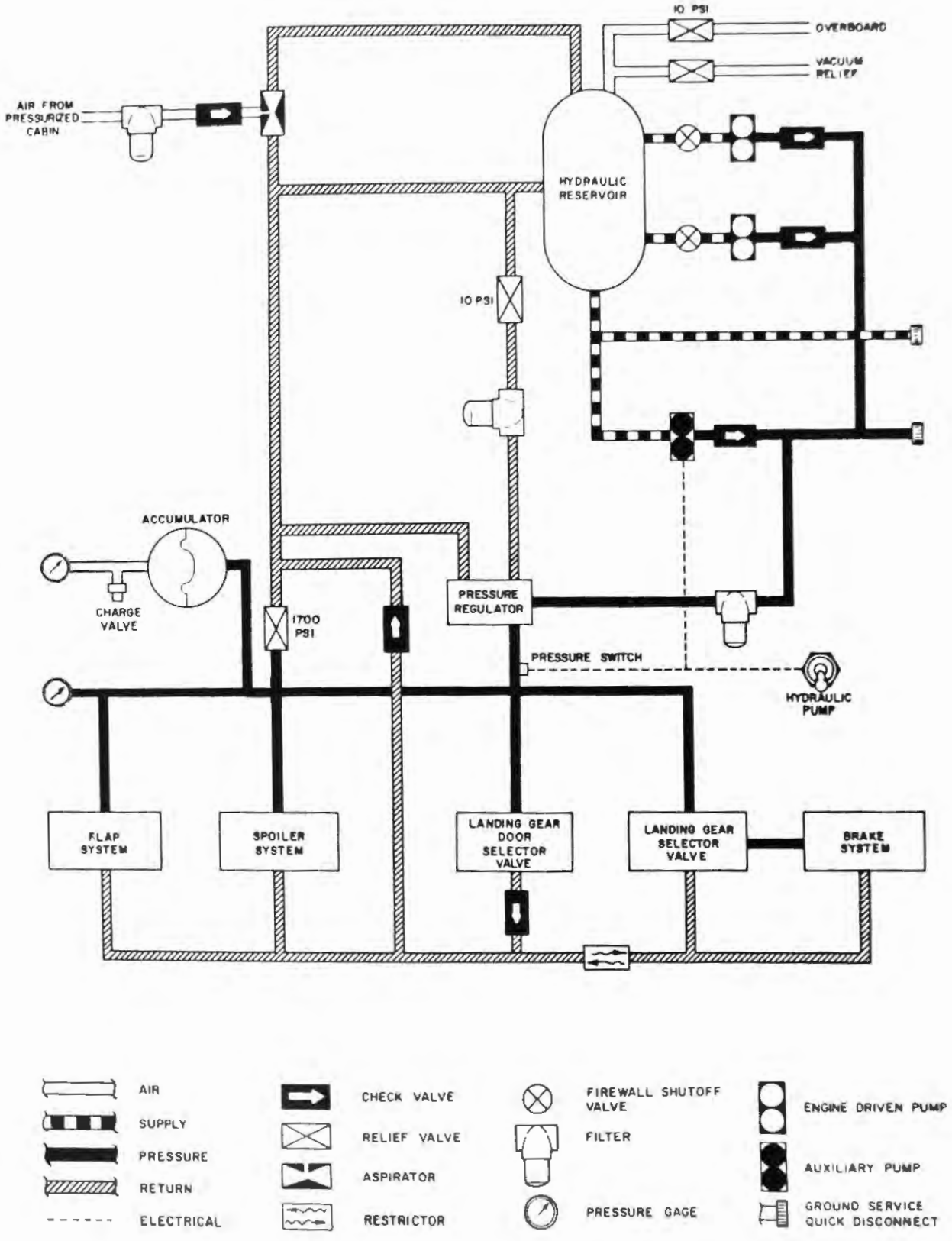

Aircraft 23-080 thru 23-099.

Figure 3-2. Hydraulic System Schematic (Sheet 4 of 4)

operating. When the hydraulic system is at normal operating pressure and no hydraulic systems are being operated, fluid output is circulated through the return line to the reservoir.

1. Engine-Driven Pump Replacement.
   (a) Remove lower engine nacelle.
   (b) Close firewall shutoff valves.
   (c) Depressurize hydraulic system. (Refer to HYDRAULIC SYSTEM, this section.)
   (d) Disconnect hydraulic hoses from pump.
   (e) Remove attaching parts and adapter (with pump attached) from engine.
   (f) Remove old pump and gasket from adapter. Install new gasket and pump on adapter.
   (g) Lubricate male spline prior to installation with either of the following lubricants: Plastilube Molly No. 3, manufactured by The Warren Refining Co, Cleveland, Ohio, or Molylube 503 grease, manufactured by the Bel-Ray Co, Inc, P. O. Box 526, Farmingdale, New Jersey.
   (h) Install new gasket and pump and secure with attaching parts.
   (i) Connect hydraulic hoses to pump.
   (j) Open firewall shutoff valves.
   (k) Check fluid level in reservoir. (Refer to SERVICING HYDRAULIC RESERVOIR, Section I.)
   (l) Check pump for leakage. (Refer to ENGINE-DRIVEN HYDRAULIC PUMP LEAKAGE CHECK, this section.)
   (m) Install lower engine nacelle.

b. Auxiliary Pump. (See Section IX for wiring diagram.) The electrically operated auxiliary hydraulic pump provides system pressure for ground operation and inflight standby power. The pump is controlled by the HYD PUMP switch on the switch panel and cycled automatically by a pressure switch. With the HYD PUMP switch set to ON, an abnormal drop in hydraulic system pressure will actuate the pressure switch and energize the pump. When normal system pressure is restored, the pressure switch will reset and deenergize the pump.

Note

Operate auxiliary hydraulic pump a maximum of 3 minutes ON and 20 minutes OFF to prevent overheating and burn-out of pump motor.

ENGINE-DRIVEN HYDRAULIC PUMP LEAKAGE CHECK. (See figures 5-4 and 5-5.)

a. Remove the lower engine nacelle.
b. Disconnect drain line at the engine-driven hydraulic pump.
c. Wipe excess fluid from pump drain port.
d. Start engine to obtain normal hydraulic system pressure. With pressure applied for 5 minutes, maximum allowable leakage shall not exceed 15 drops per minute from the drain port.
e. If the leakage rate is exceeded, remove and replace the pump.
f. Shut engine down. Connect drain line and install lower engine nacelle.

CHECK VALVES. (See figure 3-3.) Check valves are installed in the hydraulic lines to prevent reverse flow of fluid and to isolate hydraulically operated systems. One valve is located in the pressure line of each engine-driven pump to prevent motoring when the pump is deactivated, one is located in the auxiliary pump pressure line to prevent damage from system back pressure, and one is installed in the return line upstream of the reservoir to prevent reverse flow and inadvertent system operation. On C, a valve is located in the return line adjacent to the gear door selector valve to prevent unlatching of the main gear inboard doors due to back pressure present during flap and spoiler system operation.

PRESSURE REGULATOR. (See figure 3-3.) The pressure regulator is an unloading valve which relieves the hydraulic pumps of working pressure loads when the system is in static equilibrium. The regulator is adjusted to relieve at a pressure of 1450 to 1500 psi and reset at 1250 to 1350 psi. If readjustment is required, the above tolerances should be maintained.

HYDRAULIC FILTER. (See figures 3-3 and 3-4.) A hydraulic filter is installed in the pressure and return hydraulic lines. The pressure filter prevents foreign particles from entering the hydraulic system with the pump output fluid. The return filter removes foreign particles from the hydraulic fluid before it enters the reservoir. Incorporated within the filters is a replaceable micronic element and a relief valve in the filter head. The relief valve opens at 50 (±5) psi differential pressure to bypass fluid in the event of a clogged filter element. Replace the filter element in accordance with current inspection requirements, Section VIII. When installing either filter bowl torque to 100 inch-pounds. On aircraft modified by AMK72-2 torque pressure filter bowl to 150 inch-pounds. Torque return filter bowl to 100 inch-pounds.

HYDRAULIC ASPIRATOR. (See figure 3-3.) The aspirator is located in the return line between the pressure regulator and reservoir. Return fluid, passing through the aspirator, creates a venturi type action which allows the aspirator to draw air pressure from the cabin. The cabin air pressure passes through a capillary line, filter, and check valve to the aspirator for reservoir pressurization.

HYDRAULIC ACCUMULATOR. (See figure 3-3.) The accumulator is used to absorb and dampen sudden pressure surges in the hydraulic system. The accumulator is a spherical bladder-type unit precharged to A 500 (B 850) psi with dry air or nitrogen. A direct reading pressure gage is utilized for servicing purposes. Refer to Section I for servicing.

A Aircraft 23-003 thru 23-035 except aircraft modified by SK23-138.
B Aircraft 23-036 thru 23-099 and aircraft modified by SK23-138.
C Aircraft 23-080 thru 23-099.

Learjet Temporary Service Manual Revision

SERVICE MANUALS AFFECTED: Gates Learjet Models 23 and 25.

FILING INSTRUCTIONS: File as listed below and retain until further notice.

Model 23 - File adjacent to page 3-8.
Model 25 - File adjacent to page 3-7.

REASON: To revise hydarulic spline lubrication.

INSTRUCTIONS: Under 1. Engine-Driven Pump Replacement, revise step (g) to read as follows:

(g) Lubricate pump male & female splines prior to installation with either of the following lubricants: Mobil Grease No. 29 or Braycote 664S (Bray Oil Co.)

December 5, 1975

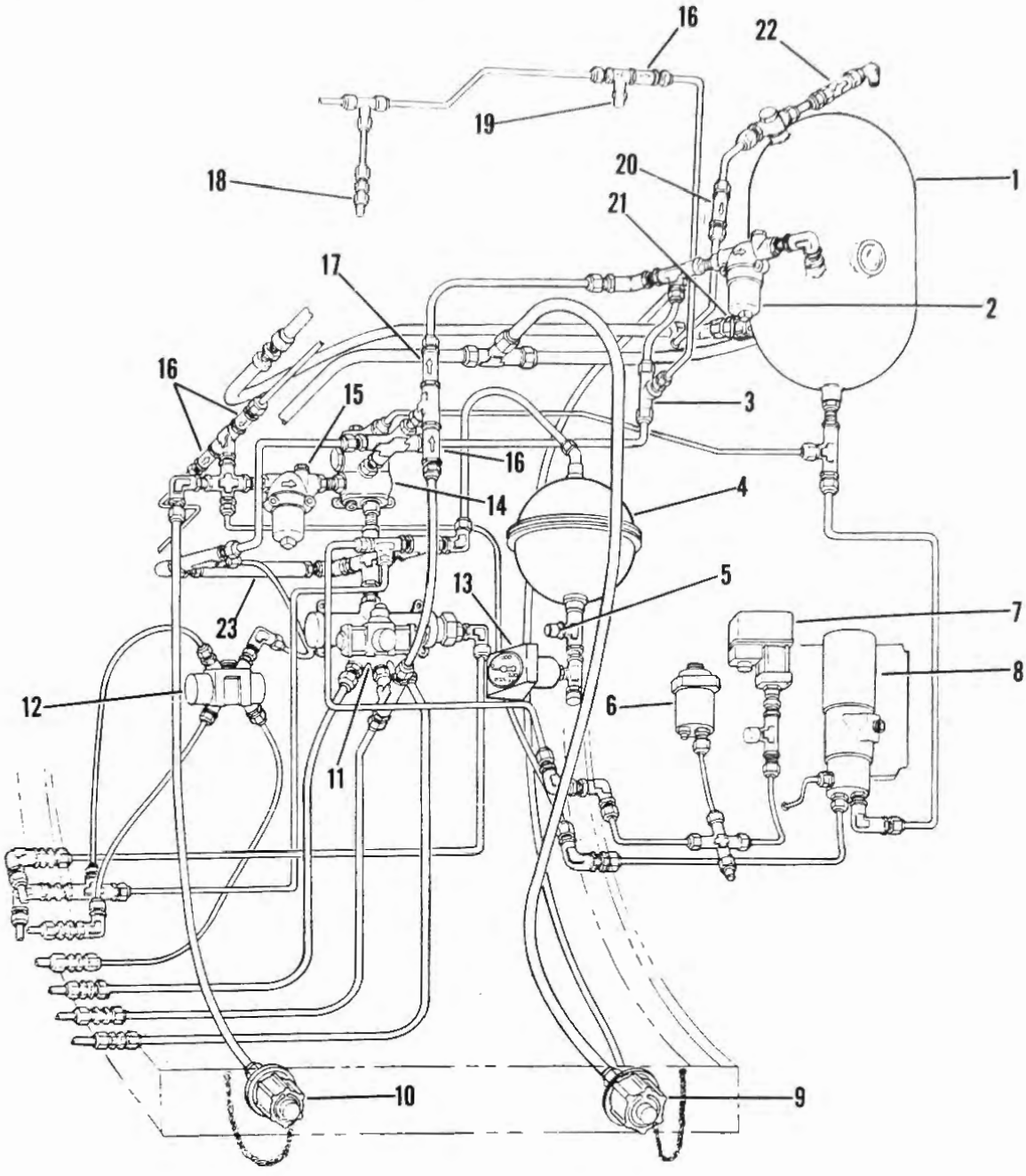

1. Hydraulic Reservoir
2. Return Filter
3. Aspirator
4. Accumulator
5. Charging Valve - Accumulator
6. Pressure Transmitter
7. Hydraulic Pressure Switch
8. Auxiliary Hydraulic Pump
9. Quick-Disconnect - Return
10. Quick-Disconnect - Pressure
11. Landing Gear Selector Valve
12. Spoiler Control Valve
13. Accumulator Pressure Gage
14. Pressure Regulator
15. Pressure Filter
16. Check Valves
17. Relief Valve - Return
18. Drain
19. Filter
20. Relief Valve
21. Firewall Shutoff Valve
22. Vacuum Relief Valve
23. System Relief Valve
24. Check Valve - Swing Gate
25. Filler Cap
26. Restrictor

Aircraft 23-003 thru 23-014 modified by SK23/24-215.

Figure 3-3. Hydraulic Components Installation (Sheet 1 of 6)

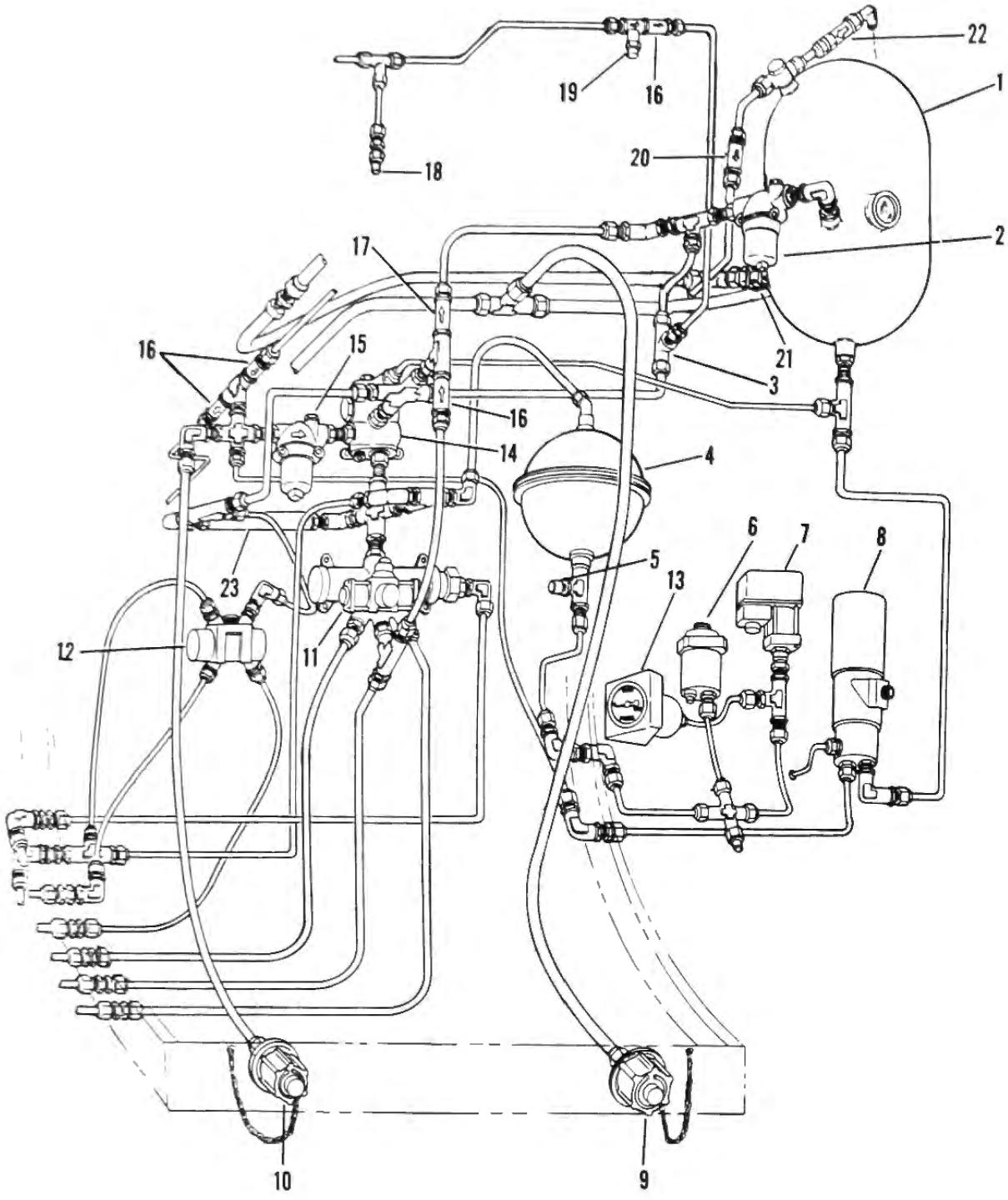

Aircraft 23-003 thru 23-009 except aircraft modified by SK23/24-215.

Figure 3-3. Hydraulic Components Installation (Sheet 2 of 6)

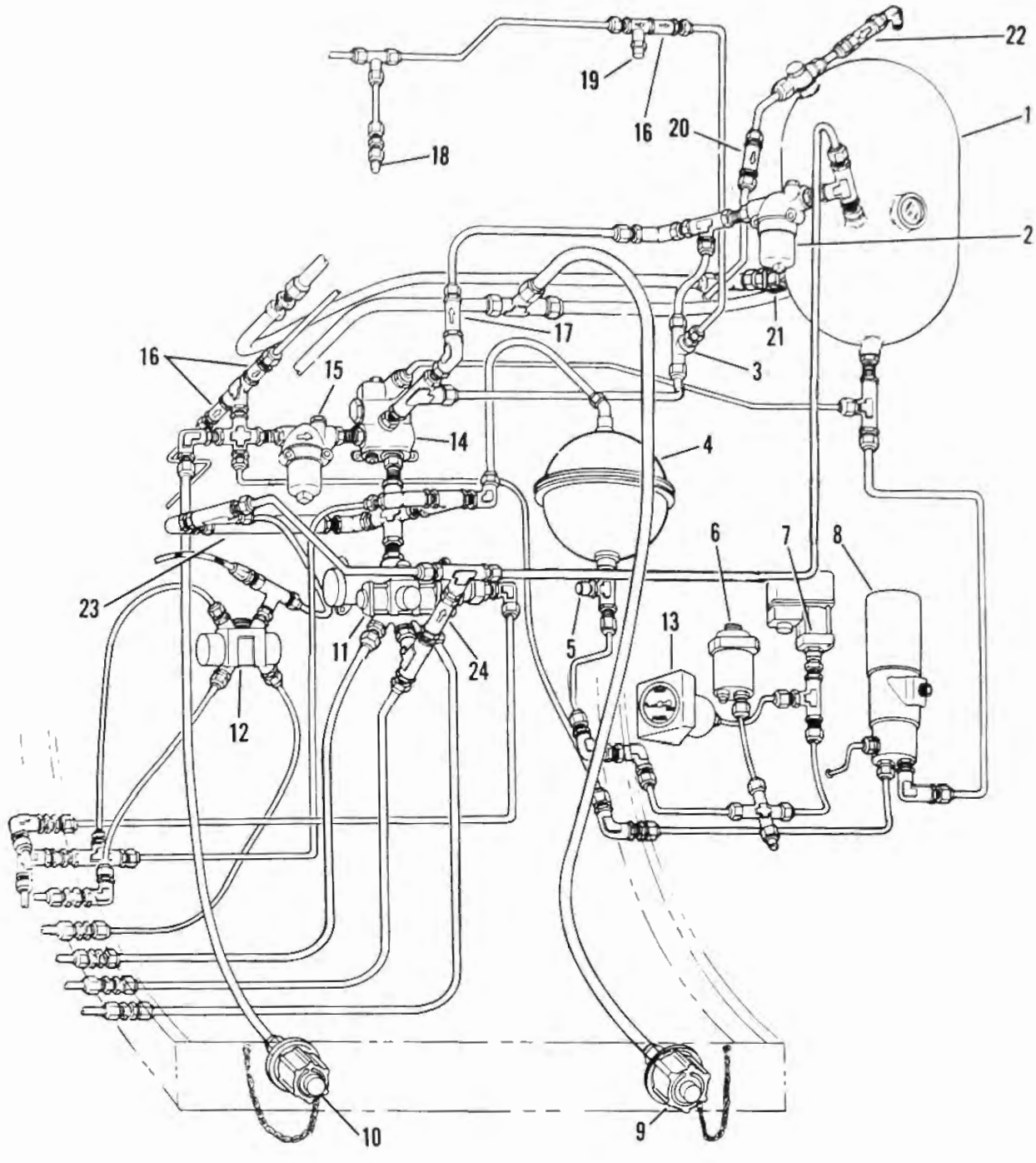

Aircraft 23-010 thru 23-014 except aircraft modified by SK23/24-215.

Figure 3-3. Hydraulic Components Installation (Sheet 3 of 6)

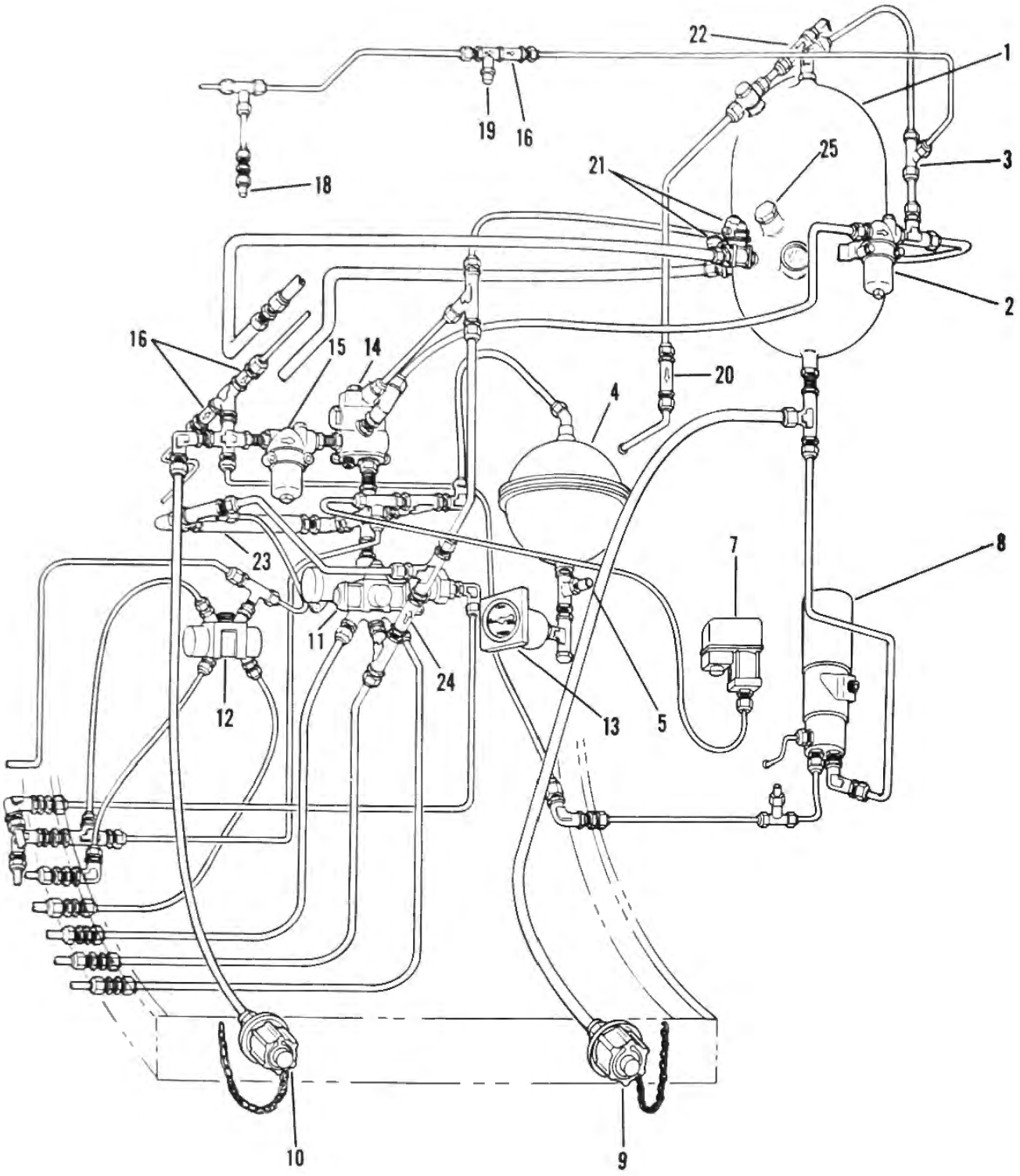

Aircraft 23-015 thru 23-039

Figure 3-3. Hydraulic Components Installation (Sheet 4 of 6)

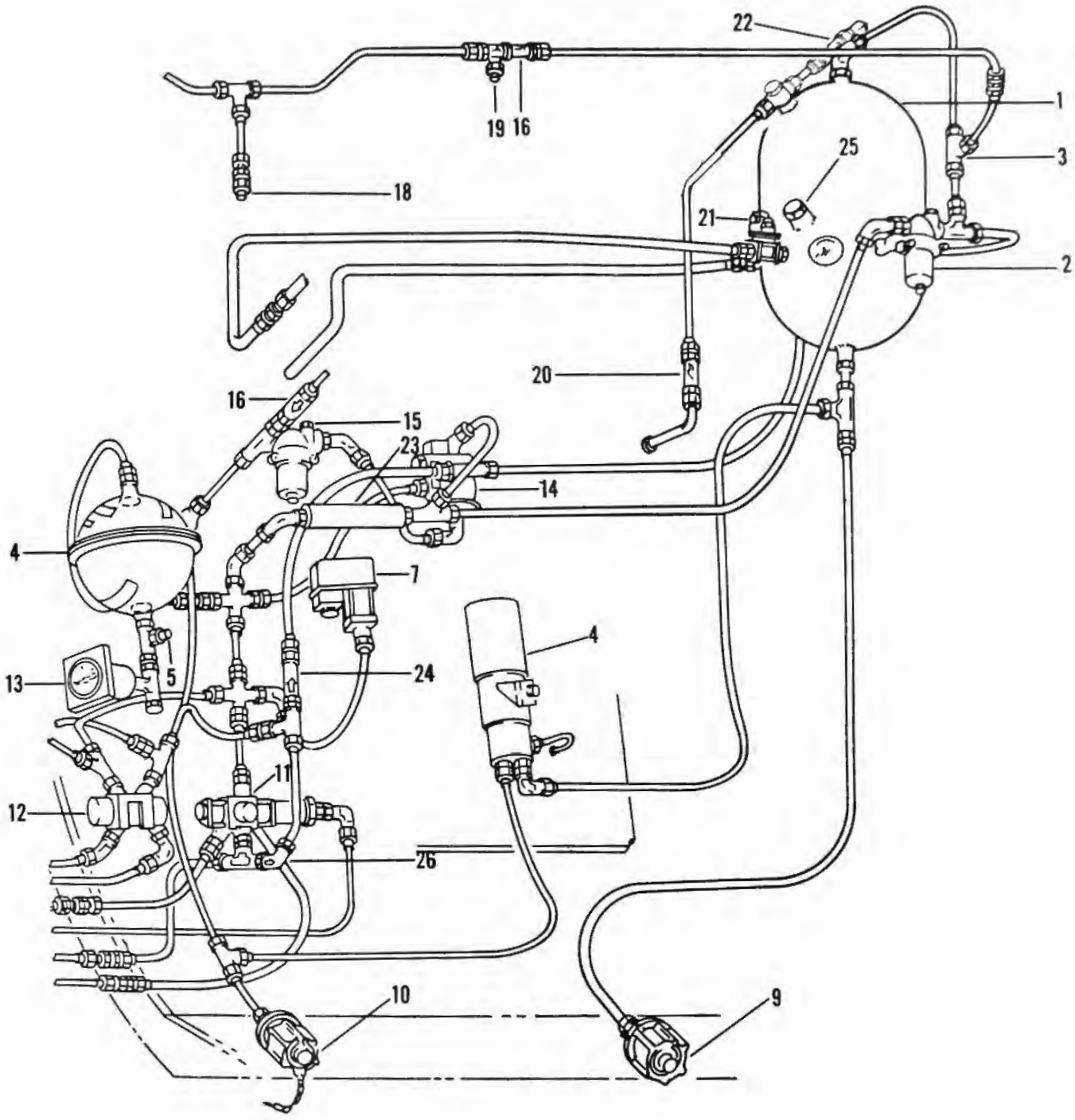

Aircraft 23-040 thru 23-079

Figure 3-3. Hydraulic Components Installation (Sheet 5 of 6)

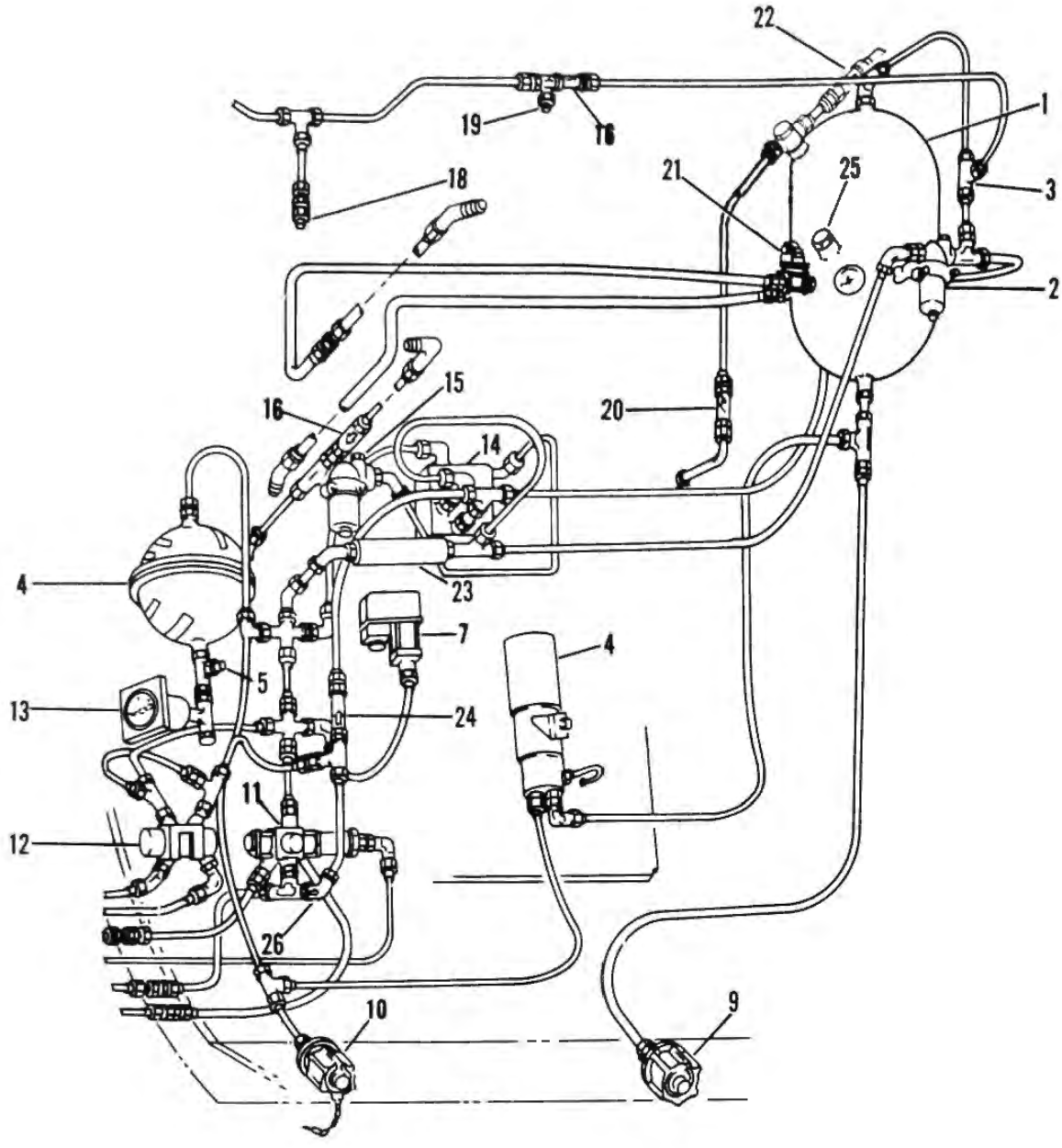

Aircraft 23-080 thru 23-099

Figure 3-3. Hydraulic Components Installation (Sheet 6 of 6)

RELIEF VALVES. Eight relief valves are installed in the hydraulic system. One relief valve is installed in the system pressure line, one in the return line, one in the reservoir vent line, one in the emergency air pressure line, one in the flap up line, one in the flap down line, one in the reservoir air line, and [D] one in the spoiler up line.

a. Relief Valve - System Pressure. (See figure 3-2.) The pressure relief valve prevents excessive buildup in case of pressure regulator failure. It is a spring-loaded poppet valve that bypasses fluid from the pressure line into the return line when system pressure exceeds 1700 psi. Free flow in the opposite direction can occur any time the return line pressure exceeds that of the pressure line.

b. Relief Valve (Return). (See figure 3-2.) The return line relief valve, set at [A] 20 psi ([B] 10 psi), is installed to direct return fluid through the aspirator. Excess pressure will bypass the aspirator through the valve.

c. Relief Valve - Vacuum. (See figure 3-2.) The relief valve eliminates a vacuum lock in the hydraulic reservoir on initial system pressurization.

d. Relief Valve - Emergency Air. (See figure 3-8.) The emergency air relief valve, set at 3350 (±50) psi, prevents overpressurization of the emergency air bottle supply. Excess pressure is vented to atmosphere.

BLEEDING HYDRAULIC SYSTEM. To expel air from the landing gear, flaps, or spoiler systems, cycle each system a minimum of five times using an auxiliary power unit. Do not use the auxiliary hydraulic pump for this purpose.

HYDRAULIC GROUND SERVICE QUICK-DISCONNECTS. (See figure 3-3.) Hydraulic ground service quick-disconnects are provided at the entrance of the hydraulic compartment for system pressurization and functional test requirements.

HYDRAULIC PRESSURE INDICATING SYSTEM. (See figure 3-3.)

a. [A] The hydraulic pressure indicating system consists of a pressure transmitter, a cockpit pressure indicator, and a direct reading accumulator pressure gage. When the system is depressurized, the accumulator charge will be shown on the cockpit hydraulic pressure indicator. The pressure transmitter, connected to the air side of the hydraulic accumulator, senses pressure changes and transmits corresponding electrical signals to the hydraulic pressure indicator on the instrument panel. The system is powered by 26-volt AC; therefore, the main or standby inverters must be operating for pressure indication. See Section IX for wiring diagram.

b. [B] The hydraulic pressure indicating system consists of a capillary line plumbed from the flap pressure system to a direct reading cockpit pressure gage. When the hydraulic system is depressurized, the cockpit pressure gage will indicate zero pressure.

LANDING GEAR HYDRAULIC SYSTEM. (Refer to Section IX for wiring diagram.) The main landing gear hydraulic system is electrically controlled and hydraulically operated. Landing gear operation sequence is controlled by limit switches located throughout the system.

a. Gear Up Switch Adjustment [C]. (See figure 3-5.) The gear up switches are actuated by strikers mounted on top of the left and right landing gear trunnions. These switches energize the gear door selector (control) valve to the up position to close the main gear inboard doors after the gear is up.

Note

If these switches are not correctly adjusted, the gear door selector (control) valve will be energized to the up position. The main gear inboard doors will remain closed and the landing gear will not retract.

1. Place aircraft on jacks and disconnect main gear outboard doors.
2. Pressurize hydraulic system and retract landing gear until inboard gear doors are up and locked.
3. Depressurize hydraulic system to allow gear to drop down on doors.
4. Attach an ohmmeter to No. 1 and 3 switch wires.
5. Adjust switch one revolution beyond point where ohmmeter actuation occurs.
6. Secure jamnuts and lockwire per double twist method.
7. Connect main gear outboard doors.

b. [C] Right Gear Down Safety Switch Adjustment. (See figure 3-5.) The right gear down safety switch is actuated by a striker mounted on top of the right gear trunnion. This switch supplies continuous voltage to the landing gear selector valve to hold the gear in its selected position.

1. Place aircraft on jacks and pressurize hydraulic system.
2. Extend landing gear to down and locked position.
3. Attach an ohmmeter to No. 1 and 3 switch wires.
4. Adjust switch one revolution beyond point where ohmmeter actuation occurs.
5. Secure jamnuts and lockwire per double twist method.

c. Main Gear Down and Locked Switch Adjustment. (See figure 3-24.) The main gear down and locked switches, one located on each main gear actuator, energize the gear door selector (control) valve to the up position to close the main gear inboard doors after the gear is down and locked.

1. Place aircraft on jacks and pressurize hydraulic system.
2. Extend landing gear to down and locked position.

[A] Aircraft 23-003 thru 23-014.
[B] Aircraft 23-015 thru 23-099.
[C] Aircraft 23-080 thru 23-099.
[D] Aircraft 23-018 thru 23-039.

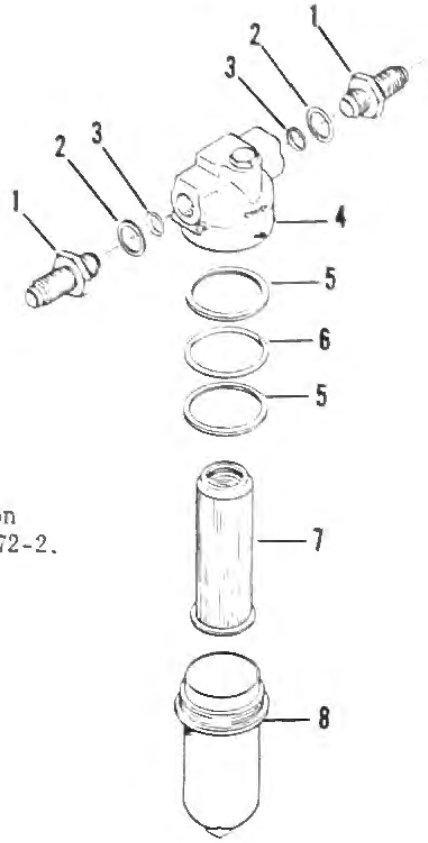

Hydraulic Return Filter on all Aircraft and Pressure Filter on Aircraft Not Modified by AMK72-2.

Torque Filter Bowl to 100 Inch-Pounds.

1. Union
2. Backup Ring
3. O-ring
4. Filter Head
5. Backup Ring
6. O-ring
7. Filter Element
8. Filter Bowl

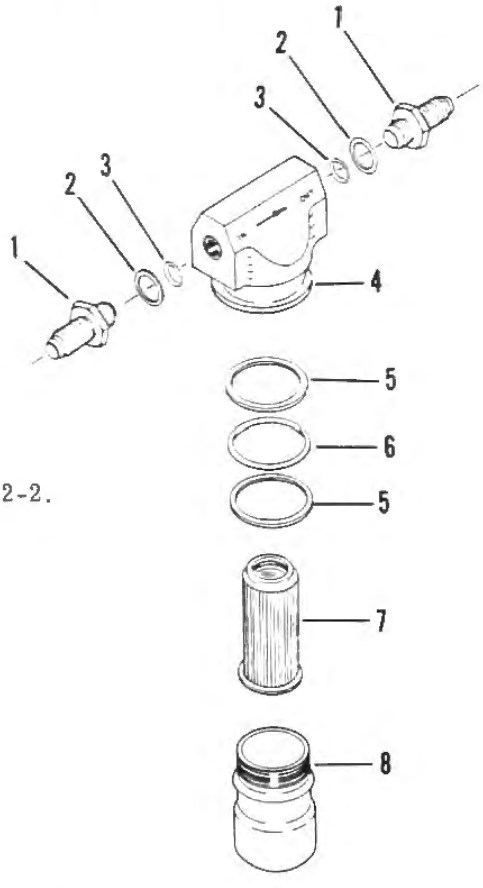

Hydraulic Pressure Filter, Aircraft Modified by AMK72-2.

Torque Filter Bowl to 150 Inch-Pounds.

Figure 3-4. Hydraulic Filter Assembly

3. Attach an ohmmeter to No. 1 and 3 switch wires.
4. Screw switch into actuator until ohmmeter actuation occurs, then back off one complete turn.
5. Secure jamnuts and lockwire per double twist method.

d. Door Down Switch Adjustment [A]. (See figure 3-32.) The left and right door down switches, one located on each main inboard gear door actuator, energize the gear selector valve to the up or down position after the main gear inboard doors are open. This allows the landing gear to extend or retract. On switch replacement, remove washers and outer jamnut.

1. Place aircraft on jacks and disconnect main gear inboard doors.
2. Pressurize hydraulic system and retract landing gear.
3. Screw switch into actuator until ohmmeter actuation occurs.
4. Back switch off from one-half to one turn until ohmmeter contact breaks.
5. Continue to back off switch until wires route up and are in line with the actuator.
6. Secure jamnut and lockwire per double twist method. Connect main gear inboard doors.

e. Main Gear Squat Switch Adjustment. (See figure 3-24.) The left and right main gear squat switches are located above each strut torque arm. When the aircraft is on the ground with struts compressed, the switch prevents the gear selector valve from being energized to the up position.

1. Place aircraft on jacks.
2. Attach an ohmmeter to No. 1 and 3 switch wires and note ohmmeter actuation.
3. Adjust switches to actuate when gear is within 0.50 (±0.10) inch from the fully extended position.

Note

After extension, the gear may be manually positioned to make the necessary switch adjustment. Do not rotate the switches after final adjustment is made.

LANDING GEAR HYDRAULIC SYSTEM OPERATION [B]. (See figures 3-6 and 3-7.)

a. Main Gear Up Cycle. Main hydraulic system pressure enters the landing gear selector valve where it is directed into the up system lines. A 1100 to 1150 psi priority valve, installed in the landing gear actuator retract line, diverts the initial hydraulic fluid through the door directional control valves to the main gear inboard door actuators and to the door uplock actuators. Pressure unlatches the door uplocks and opens the inboard gear door. When the lock actuators and door operating cylinders "bottom out," the pressure rises above 1100 psi, the priority valves open allowing fluid to enter the retract side of the main gear actuators and the main gear retracts. During the last few degrees of main gear retraction, mechanical linkage reverses the door directional control valve and applies pressure to the close side of the inboard gear door actuators which closes the doors. The uplatch engages by spring tension, completing the main landing gear up cycle.

b. Main Gear Down Cycle. Main hydraulic system pressure enters the landing gear selector valve where it is directed into the landing gear down system lines. Pressure is applied simultaneously to the uplatch actuator, the door actuator and the gear actuator; however, the outflow fluid from the gear actuator is restricted by a small screened orifice. Thus, the latch opens, the inboard doors open, and the gear slowly extends. During the last few degrees of travel, as the main gear extends, mechanical linkage reverses the position of the directional control valves and applies pressure to the up side of the inboard door actuators and the doors close. The down lock engages in the actuator by spring tension. This completes the main landing gear down cycle.

Note

The small screened restrictor in the main gear actuator line, which slows down gear extension, has a free flow bypass feature in the opposite direction to allow rapid gear retraction.

[A] Aircraft 23-080 thru 23-099.

[B] Aircraft 23-003 thru 23-079.

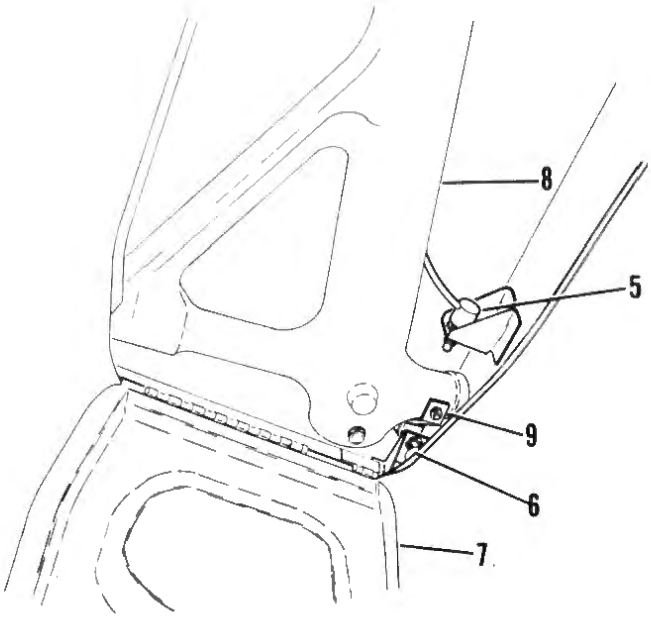

Right Gear Up

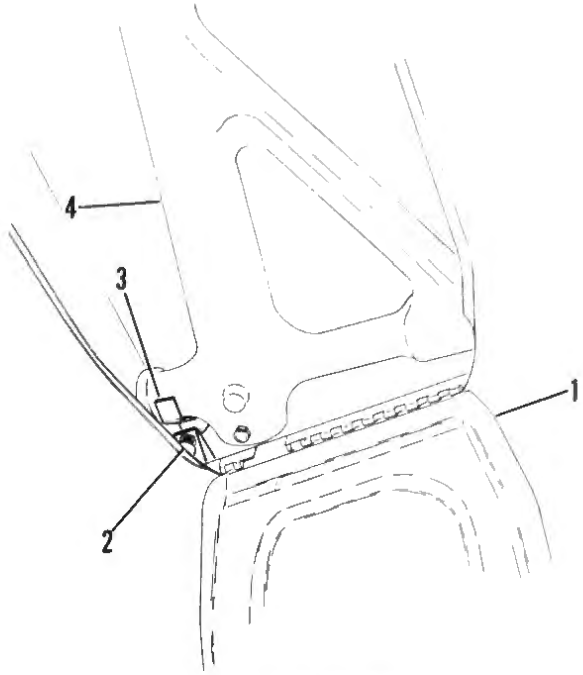

Left Gear Up

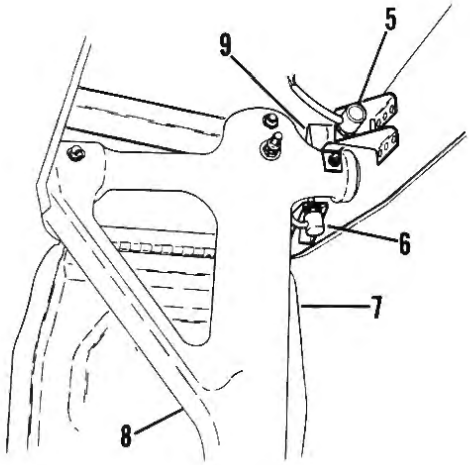

Right Gear Down

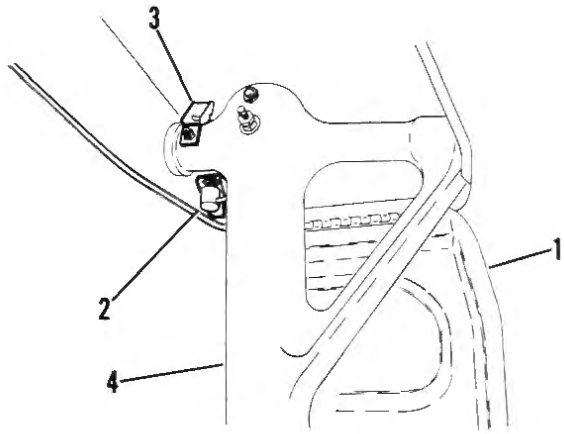

Left Gear Down

1. Main Gear Outboard Door - Left
2. Gear Up Switch - Left
3. Switch Striker - Left Gear Up
4. Main Gear Strut - Left
5. Gear Down (Safety) Switch - Right
6. Gear Up Switch - Right
7. Main Gear Outboard Door - Right
8. Main Gear Strut - Right
9. Switch Striker - Right Gear Up and Down

Figure 3-5. Main Landing Gear Switch Adjustment

c. Nose Gear Up Cycle [A]. Main hydraulic system pressure enters the landing gear selector valve where it is directed through a priority valve to the nose gear boost valve. The boost valve increases the pressure from 1500 psi to approximately 2340 psi to the up side of the nose gear actuator. The nose gear then retracts and closes the nose gear doors. The uplatch engages by spring tension to complete the nose gear up cycle.

d. Nose Gear Up Cycle [B]. Main hydraulic system pressure enters the landing gear selector valve where it is directed to the up side of the nose gear actuator. The nose gear then retracts and closes the nose gear doors. The uplatch engages by spring tension and the nose gear up cycle is complete.

e. Nose Gear Down Cycle. Main hydraulic system pressure enters the landing gear selector valve where it is directed to the nose gear uplatch actuator and to the down side of the nose gear actuator which extends the nose gear. The nose gear doors are opened by mechanical linkage between the nose strut and the gear doors. A small one-way screened restrictor, installed in the nose gear return line, dampens nose gear extension. The down lock engages when the actuator is fully extended. This completes the nose gear down cycle.

LANDING GEAR HYDRAULIC SYSTEM OPERATION [C]. (See figures 3-6 and 3-7.) (Refer to Section IX for wiring diagram.) The optional auxiliary battery provides an alternate source of electrical power in the event of normal electrical system failure. If an electrical system failure occurs, the gear may be extended by holding the auxiliary battery SPOILER-FLAP-GEAR switch to ON and setting the landing gear selector switch to GEAR DOWN.

a. Landing Gear Down Cycle. Setting the landing gear selector switch to GEAR DOWN energizes the gear door selector (control) valve to the down position. Main hydraulic system pressure enters the valve and is directed to the door uplock actuators. Pressure unlatches the gear door uplocks and opens the main gear inboard doors. When the doors are opened, the door down switches are actuated and energize the landing gear selector valve to the down position. Pressure flows through the valve to release the nose gear uplatch actuator and extend the landing gear.

Note

The nose gear and main gear outboard doors are opened by mechanical linkage between the struts and the doors. Restrictors, installed in the main and nose gear actuator return lines, dampen main gear extension.

The nose gear down and locked switch actuates the (green) locked down light when the nose gear is fully extended. When the main gear is extended, the gear down and locked switches are actuated, energizing the gear door selector (control) valve to the up position. Pressure is routed to the door actuators and the main gear inboard doors close. The main gear inboard door uplocks are engaged by actuator spring tension. When the uplock mechanism is engaged, the door up switches are actuated and the left and right (green) locked down lights are lighted. This completes the landing gear down cycle.

Note

The restrictors in the main and nose gear actuator return lines, which dampen gear extension, have a free flow bypass feature in the opposite direction to allow for rapid gear retraction.

b. Landing Gear Up Cycle. Setting the landing gear selector switch to GEAR UP energizes the door selector (control) valve to the down position. Main hydraulic system pressure enters the valve and is directed to the door uplock actuators. Pressure unlatches the gear door uplocks and opens the main gear inboard doors.

Note

When the landing gear clears the ground on takeoff or with the aircraft on jacks, the squat switches are actuated to allow the landing gear selector valve to be energized to the up position.

When the main gear inboard doors are opened, the door down switches are actuated and the landing gear selector valve is energized to the up position. Pressure flows through the valve to the nose gear and main gear actuators causing the landing gear to retract.

Note

The nose gear doors and main gear outboard doors are closed by mechanical linkage.

When the gear is retracted, the gear up switches are actuated, energizing the door selector (control) valve to the up position. Pressure is routed to the door actuators and the main gear inboard doors close. The nose gear uplatch mechanism and main gear inboard door uplocks are engaged by actuator spring tension. When the gear is fully retracted (all doors

[A] Aircraft 23-003 thru 23-025.
[B] Aircraft 23-026 thru 23-079.
[C] Aircraft 23-080 thru 23-099.

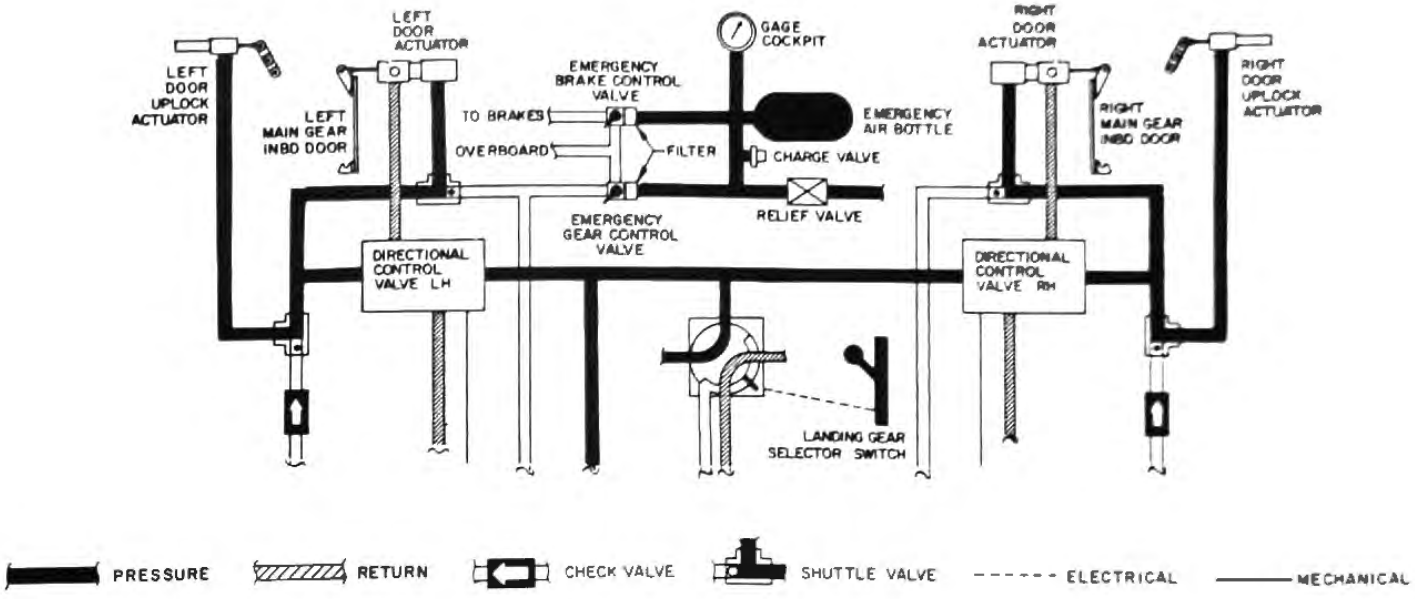

GEAR UP OPERATION SEQUENCE - HYDRAULIC SYSTEM

Note

When the gear is down and locked, the mechanical linkage between the gear and the directional control valve has positioned the directional control valve for the gear up cycle. See Sheet 2 for complete gear up cycle.

1. Landing Gear Selector Switch to GEAR UP.
2. Gear Selector Valve energizes to the UP position.
3. Hydraulic pressure releases the door uplock actuators and opens the inboard doors.
4. Hydraulic pressure retracts the gear.
5. The mechanical linkage repositions the directional control valve and applies hydraulic pressure to the inboard door actuator.
6. The inboard doors close and are locked in position by spring tension of the uplock actuators.

Aircraft 23-003 thru 23-079.

Figure 3-6. Landing Gear Hydraulic System Schematic - Gear Up Cycle (Sheet 1 of 4)

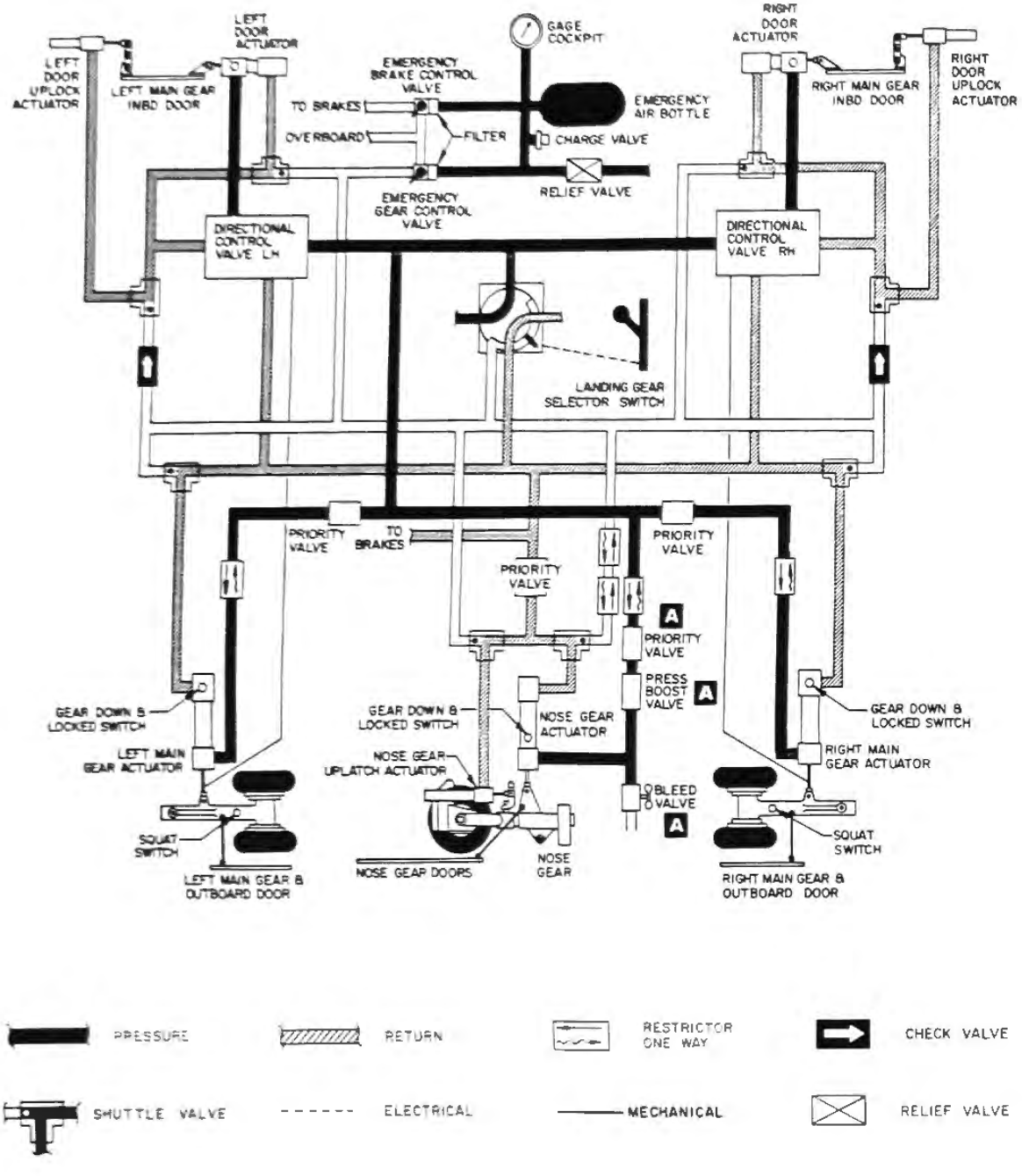

A Aircraft 23-003 thru 23-025.

Aircraft 23-003 thru 23-079.

Figure 3-6. Landing Gear Hydraulic System Schematic - Gear Up Cycle (Sheet 2 of 4)

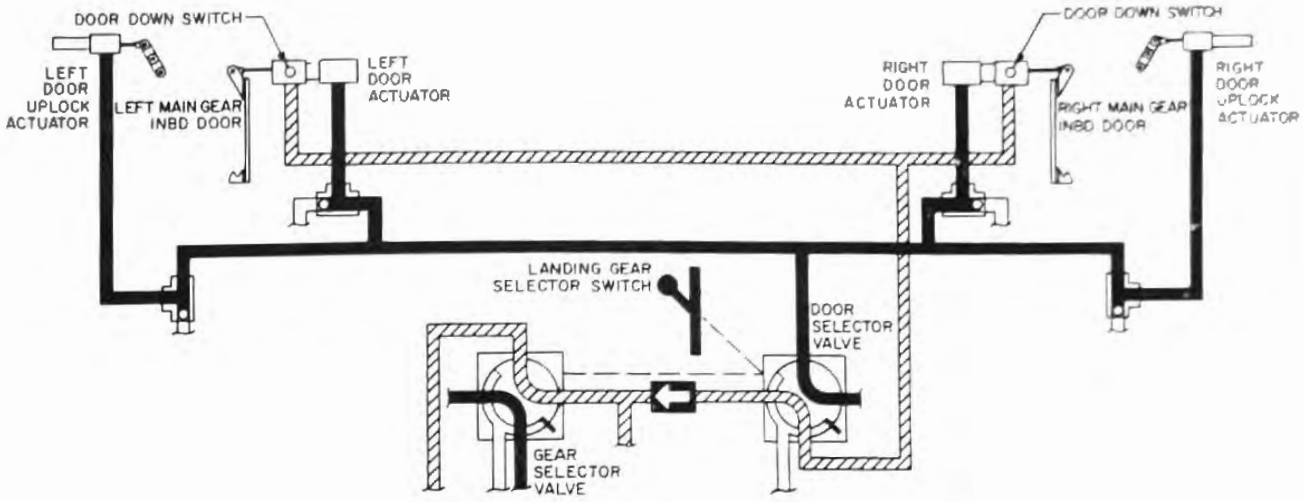

GEAR UP OPERATION SEQUENCE - HYDRAULIC SYSTEM

Note

Door Selector Valve shown in down position to open main gear inboard doors prior to gear retraction. See Sheet 4 for complete gear up cycle.

1. Landing Gear Selector Switch to GEAR UP.
2. Door Selector Valve energized to down position.
3. Hydraulic pressure releases door uplock actuators and main gear inboard doors open.
4. Door down switches energize Gear Selector Valve to up position (See Sheet 4).
5. Hydraulic pressure retracts landing gear.
6. Gear up switches energize Door Selector Valve to up position and main gear inboard doors close.
7. Main gear inboard doors lock in position by spring tension of door uplock actuators.

Aircraft 23-080 thru 23-099.

Figure 3-6. Landing Gear Hydraulic System Schematic - Gear Up Cycle (Sheet 3 of 4)

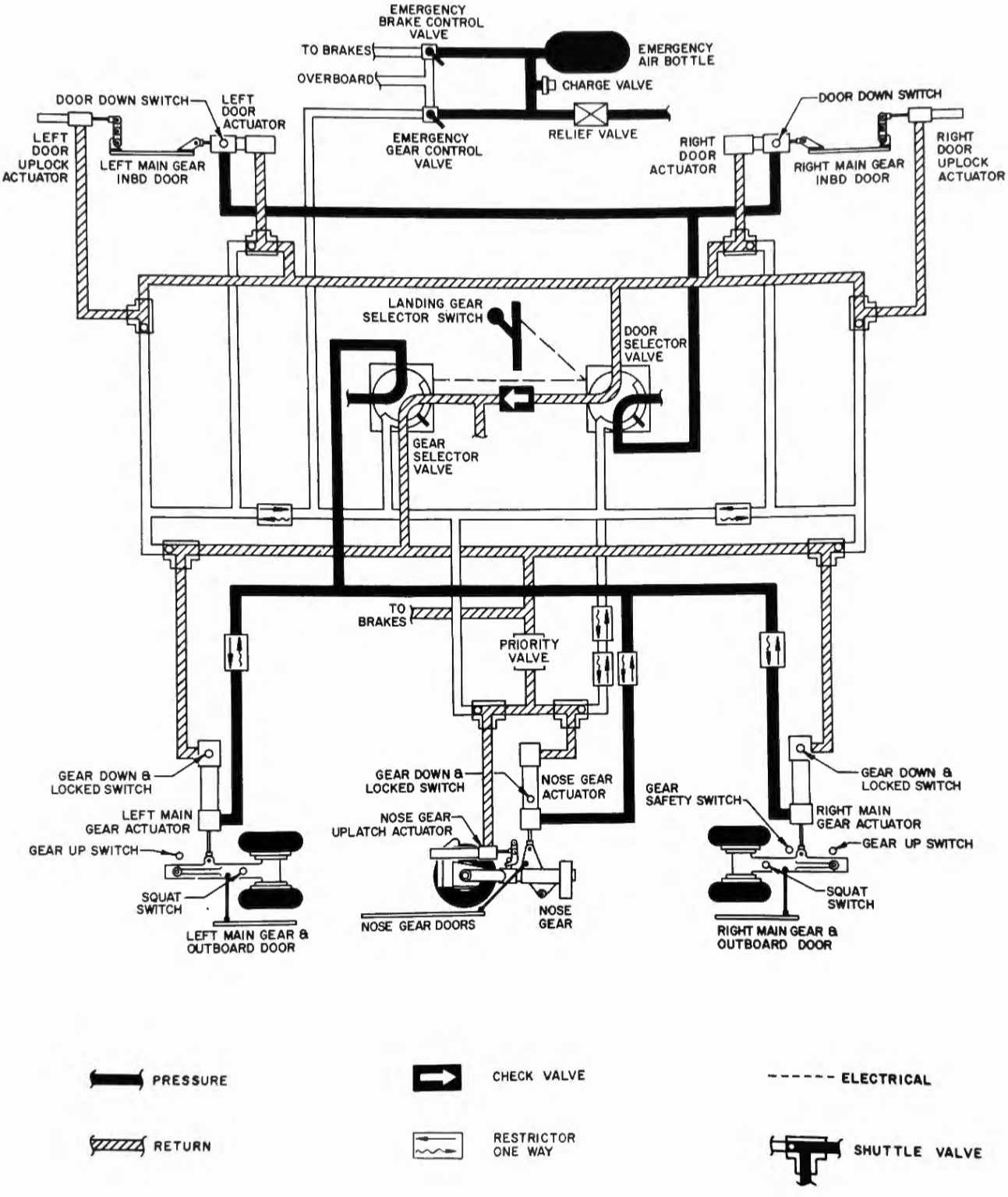

Aircraft 23-080 thru 23-099.

Figure 3-6. Landing Gear Hydraulic System Schematic - Gear Up Cycle (Sheet 4 of 4)

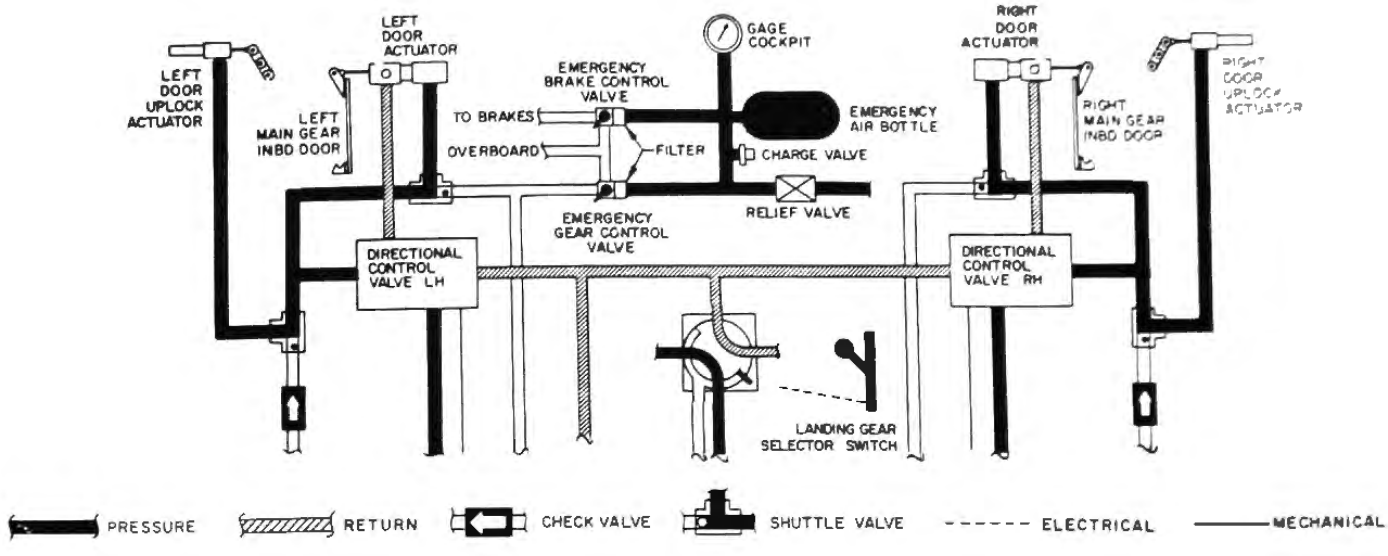

GEAR DOWN OPERATION SEQUENCE - HYDRAULIC SYSTEM

Note

When the gear is up and locked, the mechanical linkage between the gear and the directional control valve has positioned the directional control valve for the gear down cycle. See Sheet 2 for complete gear down cycle.

1. Landing Gear Selector Switch to GEAR DOWN.
2. Gear Selector Valve energizes to the DN position.
3. Hydraulic pressure releases the door uplatch actuators and opens the inboard doors.
4. Hydraulic pressure extends the gear.
5. The mechanical linkage repositions the directional control valve and applies hydraulic pressure to the inboard door actuators.
6. The inboard doors close and are locked in position by spring tension of the uplatch actuators.

Aircraft 23-003 thru 23-079.

Figure 3-7. Landing Gear Hydraulic System Schematic - Gear Down Cycle (Sheet 1 of 4)

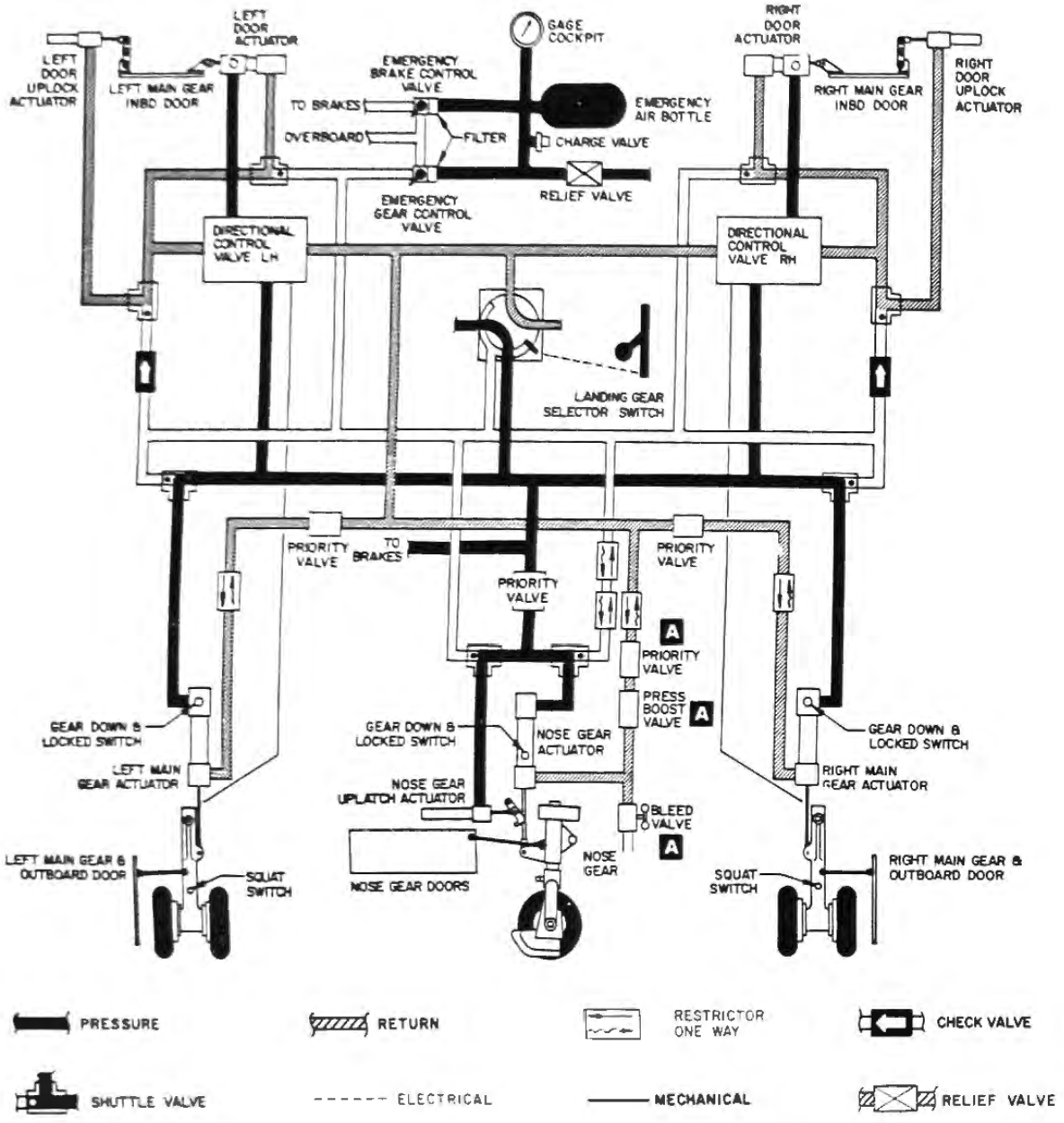

A Aircraft 23-003 thru 23-025.

Aircraft 23-003 thru 23-079.

Figure 3-7. Landing Gear Hydraulic System Schematic - Gear Down Cycle (Sheet 2 of 4)

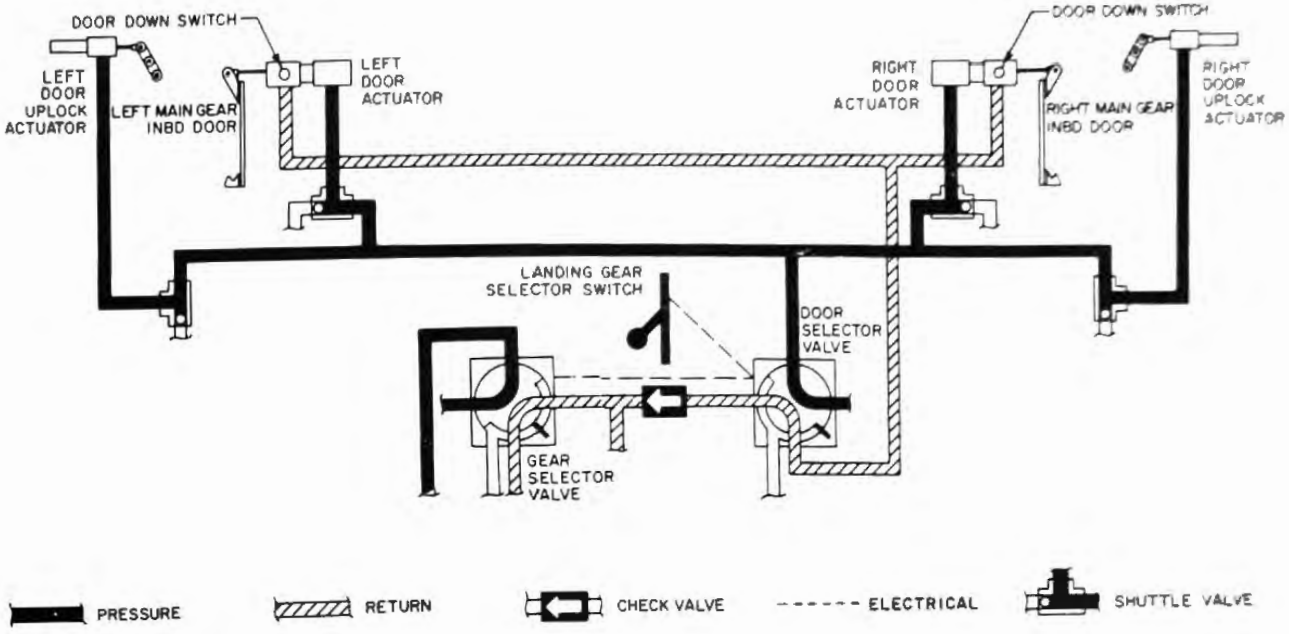

GEAR DOWN OPERATION SEQUENCE - HYDRAULIC SYSTEM

Note

Door Selector Valve shown in down position to open main gear inboard doors prior to gear extension. See Sheet 4 for complete gear down cycle.

1. Landing Gear Selector Switch to GEAR DOWN.
2. Door Selector Valve energized to down position.
3. Hydraulic pressure releases door uplock actuators and main gear inboard doors open.
4. Door down switches energize Gear Selector Valve to down position (See Sheet 4).
5. Hydraulic pressure releases nose gear uplatch actuator and extends landing gear.
6. Gear down and locked switches energize Door Selector Valve to up position and main gear inboard doors close.
7. Main gear inboard doors lock in position by spring tension of door uplock actuators.

Aircraft 23-080 thru 23-099.

Figure 3-7. Landing Gear Hydraulic System Schematic - Gear Down Cycle (Sheet 3 of 4)

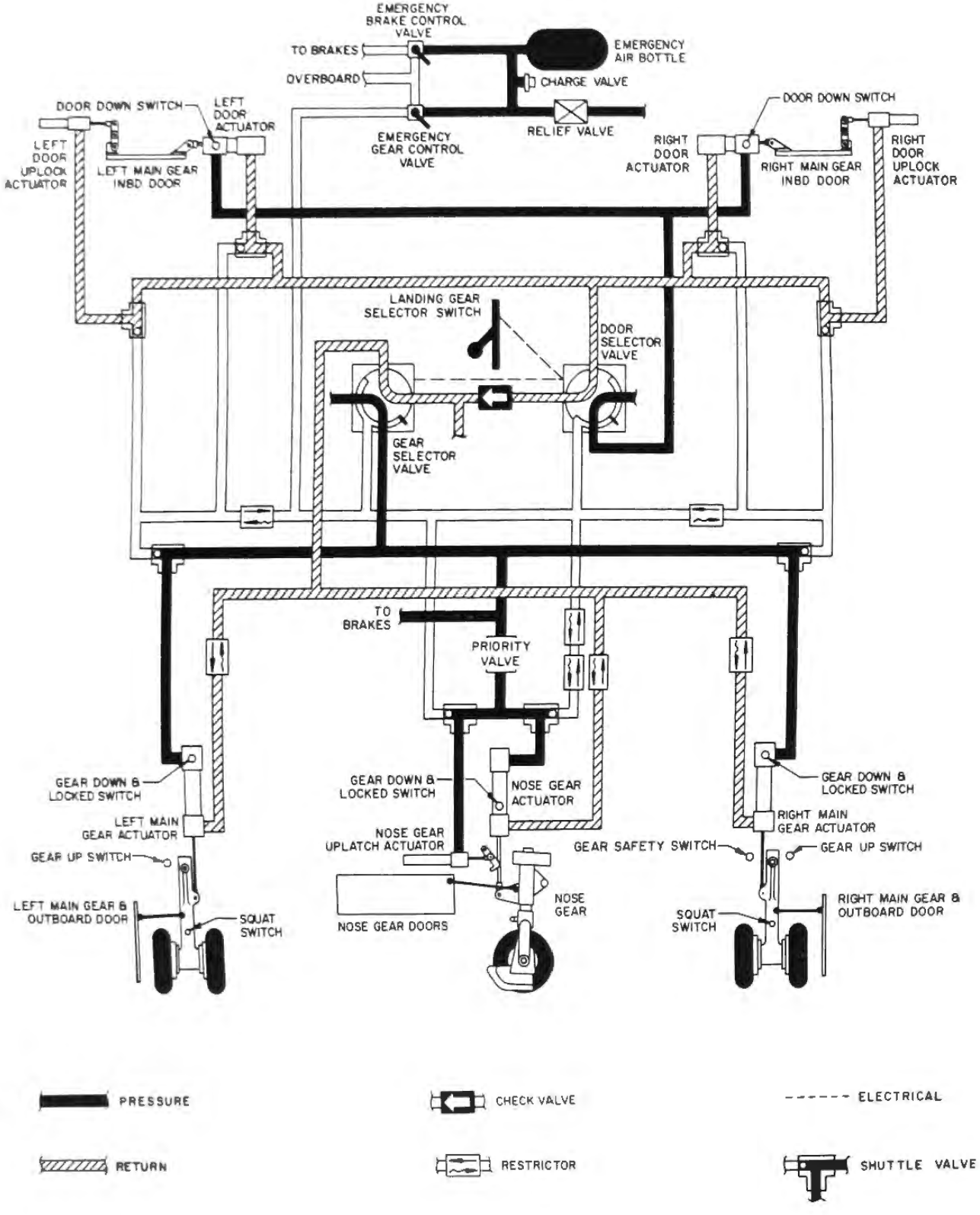

Aircraft 23-080 thru 23-099.

Figure 3-7. Landing Gear Hydraulic System Schematic - Gear Down Cycle (Sheet 4 of 4)

Learjet Temporary Service Manual Revision

SERVICE MANUALS AFFECTED: Gates Learjet Models 23, 24, 24B Service Manuals.

FILING INSTRUCTIONS: Insert pages as listed below and retain until further notice.

Model 23	- Insert adjacent to page 3-26A.
Model 24	- Insert adjacent to page 3-17.
Model 24B	- Insert adjacent to page 3-19.

INSTRUCTIONS: Under C. Returning the Landing Gear to Normal Operation, add the following NOTE immediately following item 2.

Note

On aircraft equipped with a Kidde emergency gear control valve, the handle will return to the off and latched position when the ratchet spring release is pulled. On aircraft equipped with a Sterer emergency gear control valve the handle will return to the off position when the ratchet spring release is pulled but will not latch. The Sterer valve handle must be manually lifted up into the latched position.

February 21, 1977

closed), the door up switches and nose gear up and locked switch are actuated causing the (red) unsafe lights to go out. This completes the landing gear up cycle.

LANDING GEAR EMERGENCY EXTENSION AIR SYSTEM [A]. (See figure 3-8.)

a. Operation. The emergency air system is operated by the "emergency gear and brake control handle" located on the right side of the center pedestal. When this handle is depressed, pressure builds up in the brake system in direct proportion to the amount of effort applied to the handle. A pressure of 250 to 300 pounds in this line opens a second valve which passes full bottle pressure into the landing gear pneumatic extension lines. This high pressure repositions the shuttle valves and the landing gear selector spool and extends the gear. A check valve traps this pressure in these lines such that it cannot be bled out in flight. In case of an electrical power failure and emergency extension is required, emergency air is directed to shift the landing gear selector to provide a path for trapped fluid to return to the reservoir. Gear extension sequence on emergency extension is identical to normal sequence except the main gear inboard doors do not close after the gear has extended.

b. Returning Landing Gear to Normal Operation. If the landing gear has been extended by use of the emergency air system, return the system to normal as follows:

1. Place the aircraft on jacks.
2. Bleed the air lines at the vent check bleeder valve.
3. Perform necessary maintenance to correct the system malfunction.
4. With aircraft electrical power applied, set gear selector switch to GEAR DOWN.
5. Pressurize hydraulic system using a hydraulic power cart. This will reposition the shuttle valves.

CAUTION

Due to the possibility of a large volume of high pressure air being trapped on the hydraulic side of the shuttle valves, the hydraulic reservoir could be ruptured when the gear is retracted. Therefore the reservoir filler cap must be removed prior to retracting the gear. The gear should be retracted in a series of at least six steps by setting the gear selector switch to GEAR UP then GEAR DOWN. Each time the gear selector switch is set to GEAR UP the gear should be allowed to retract further than the previous time until the gear is completely retracted.

6. Lower tailcone access door. Loosen one of the hydraulic line nuts between hydraulic reservoir and 10 psi vent valve to bleed off reservoir pressure, retighten nut and remove reservoir filler cap. Assure that reservoir fluid level is above sight glass. Make provisions in the tailcone area for possible spurting of fluid from reservoir filler.
7. Retract the gear in approximately six steps by setting the gear selector switch to GEAR UP and then to GEAR DOWN allowing the gear to retract slightly further each time until gear is completely retracted. This will purge out the trapped air and help prevent fluid from spurting out of the reservoir.
8. Cycle the gear approximately 20 times to assure that all air is expelled from the system.
9. Service hydraulic reservoir. Refer to Section I.
10. Service emergency air bottle. Refer to Section I.

LANDING GEAR EMERGENCY EXTENSION AIR SYSTEM [B]. (See figure 3-8.)

a. Emergency Gear Control Valve Operation. The emergency air system to the landing gear is operated by the "emergency gear control handle," located on the left side of the center pedestal. This valve has a protective cover installed and the handle remains in the "down" position when depressed. Air pressure may be bled from the gear system through an overboard vent by pulling the ratchet spring release to allow the spring-loaded handle to return to the off position.

b. Emergency Brake Control Valve Operation. The brake emergency air system is operated by the "emergency brake control handle," located on the right side of the center pedestal. The handle must be held in the "down" position to apply air pressure to the brakes. A pressure regulator within the valve limits brake pressure to approximately 600 psi. When the handle is released, air pressure is bled to allow brake release through an overboard vent and emergency air pressure is shut off at the valve.

Note

The brake anti-skid system is inoperative during emergency braking.

c. Returning Landing Gear to Normal Operation. If the landing gear has been extended by use of the emergency air system, return the system to normal as follows:

1. Place aircraft on jacks.
2. Bleed the air lines by pulling the ratchet spring release on the emergency gear control handle, allowing the handle to return to the OFF position.

[A] Aircraft 23-003 thru 23-024 except aircraft modified by SK23-43.

[B] Aircraft 23-025 thru 23-099 and aircraft modified by SK23-43.

3. Perform necessary maintenance to correct the system malfunction.
4. With aircraft electrical power applied, set gear selector switch to GEAR DOWN.
5. Pressurize hydraulic system using a hydraulic power cart. This will reposition the shuttle valves.

CAUTION

Due to the possibility of a large volume of high pressure air being trapped on the hydraulic side of the shuttle valves, the hydraulic reservoir could be ruptured when the gear is retracted. Therefore the reservoir filler cap must be removed prior to retracting the gear. The gear should be retracted in a series of at least six steps by setting the gear selector switch to GEAR UP then GEAR DOWN. Each time the gear selector switch is set to GEAR UP the gear should be allowed to retract further than the previous time until the gear is completely retracted.

6. Lower tailcone access door. Loosen one of the hydraulic line nuts between hydraulic reservoir and 10 psi vent valve to bleed off reservoir pressure, retighten nut and remove reservoir filler cap. Assure that reservoir fluid level is above sight glass. Make provisions in the tailcone area for possible spurting of fluid from reservoir filler.
7. Retract the gear in approximately six steps by setting the gear selector switch to GEAR UP and then to GEAR DOWN allowing the gear to retract slightly further each time until gear is completely retracted. This will purge out the trapped air and help prevent fluid from spurting out of the reservoir.
8. Cycle the gear approximately 20 times to assure that all air is expelled from the system.
9. Service hydraulic reservoir. Refer to Section I.
10. Service emergency air bottle. Refer to Section I.

EMERGENCY AIR EXTENSION SYSTEM PLUMBING LEAKAGE CHECK. In accordance with current inspection requirements, Section VIII, the following leakage check should be performed to assure the integrity of the emergency air extension system.

a. Remove the emergency air bottle filler cap, loosen valve end nut, and bleed pressure down to approximately 800 psi. This lower pressure will prevent repositioning of the main gear actuator, nose gear uplatch actuator, and nose gear actuator shuttle valves, inducing air into the hydraulic system and disturbing the O-ring seal when the emergency control valves are opened.

Note

The door actuator and door uplock actuator shuttle valves will reposition when air pressure is applied. This is due to these shuttle valves being connected to system return line through the directional control valves (aircraft 23-003 thru 23-079) or the door control valves (aircraft 23-080 thru 23-099) during normal sequence operation.

b. Pressurize the hydraulic system to 1500 psi.
c. While system pressure is at 1500 psi, fully depress either the pilot's or copilot's brake pedal and set the parking brake. This will assure adequate hydraulic pressure is maintained to prevent repositioning of the brake system shuttle valves by the emergency air.

1. Emergency Air Extension System Plumbing Leakage Check (Aircraft 23-003 thru 23-024 Not Modified by SK23-43). Perform the leakage check as follows:

Note

When the emergency gear and brake control handle is depressed, system hydraulic pressure will drop momentarily until the power cart or the auxiliary pump returns pressure to 1500 psi. This is due to the door actuator and door uplock actuator shuttle valves repositioning.

(a) Depress and HOLD emergency gear and brake control handle.
(b) After system has stabilized, monitor the emergency air pressure gage (for approximately 3 minutes) for loss of air pressure.
(c) If loss of air pressure is not evident, bleed air pressure from system by returning the emergency gear and brake control handle to off.
(d) Release the parking brakes.
(e) Charge the emergency air bottle to normal pressure. (Refer to SERVICING EMERGENCY AIR BOTTLE, Section L.)
(f) Bleed the hydraulic system. (Refer to BLEEDING HYDRAULIC SYSTEM, this section.)

2. Emergency Air Extension System Plumbing Leakage Check (Aircraft 23-025 thru 23-099 and 23-003 thru 23-024 Modified by SK23-43). Perform the leakage check as follows:
(a) Landing Gear Emergency Air Extension System Check.

Note

When the emergency gear control handle is depressed, system hydraulic pressure will drop momentarily until the power cart or the auxiliary pump returns pressure to 1500 psi. This is due to the door actuator and door uplock actuator shuttle valves repositioning.

(1) Depress the emergency gear control handle.
(2) After system has stabilized, monitor the emergency air pressure gage (for approximately 3 minutes) for loss of air pressure.
(3) If loss of air pressure is not evident, bleed air pressure from the system by pulling the ratchet spring release to allow the handle to return to normal.

(b) Brake Emergency Air Check.
(1) Push emergency brake handle completely down and hold. Monitor the emergency air pressure gage (approximately 3 minutes) for loss of air pressure.
(2) If loss of pressure is not evident, release the emergency brake handle, allowing the air pressure to bleed from the system.
(3) Release the parking brakes.

(c) Charge the emergency air bottle to normal pressure. (Refer to SERVICING EMERGENCY AIR BOTTLE, Section I.)

(d) Bleed the hydraulic system. (Refer to BLEEDING HYDRAULIC SYSTEM, this section.)

DIRECTIONAL CONTROL VALVES **A** (See figure 3-9.) A rotary three-position four-way directional control valve is installed in the hydraulic pressure line to each main landing gear. The purpose of the directional control valves is to close the main gear inboard doors after the landing gear has extended or retracted. The control valves are repositioned by mechanical linkage connected to the main gear struts.

MAIN GEAR INBOARD DOOR DIRECTIONAL CONTROL VALVE ADJUSTMENT **A** (See figure 3-7A.)

a. Place aircraft on jacks.
b. Disconnect main gear inboard door actuators from both doors. (Refer to MAIN INBOARD DOOR REMOVAL, this section.)
c. Connect portable hydraulic pump to aircraft quick-disconnect pressure side.
d. Disconnect door directional control valve cable at the strut.

Note

Difficulty may be experienced in operating the directional control valve lever due to buildup of pressure within the valve. Pressure will dissipate, but may recur.

e. Using the door directional control valve lever, manually operate the control valve to check the location of the lever in the extreme positions. This will assure the lever will not bind or break the cable.
f. Move lever outboard to extend door actuator; quickly move lever to the extreme inboard position to prevent actuator from retracting. Move lever outboard slowly until actuator starts to retract and hold in this position. This is the desired position to connect the cable to the strut.
g. Disconnect and cap the gear up hose from the opposite gear actuator. (Refer to MAIN GEAR ACTUATOR REMOVAL, this section.)

A Aircraft 23-003 thru 23-079.

1. Directional Control Valve
2. Valve Lever LH
3. Valve Lever RH
4. Main Landing Gear Trunnion LH Aft
5. Bracket
6. Jamnut
7. Control Cable

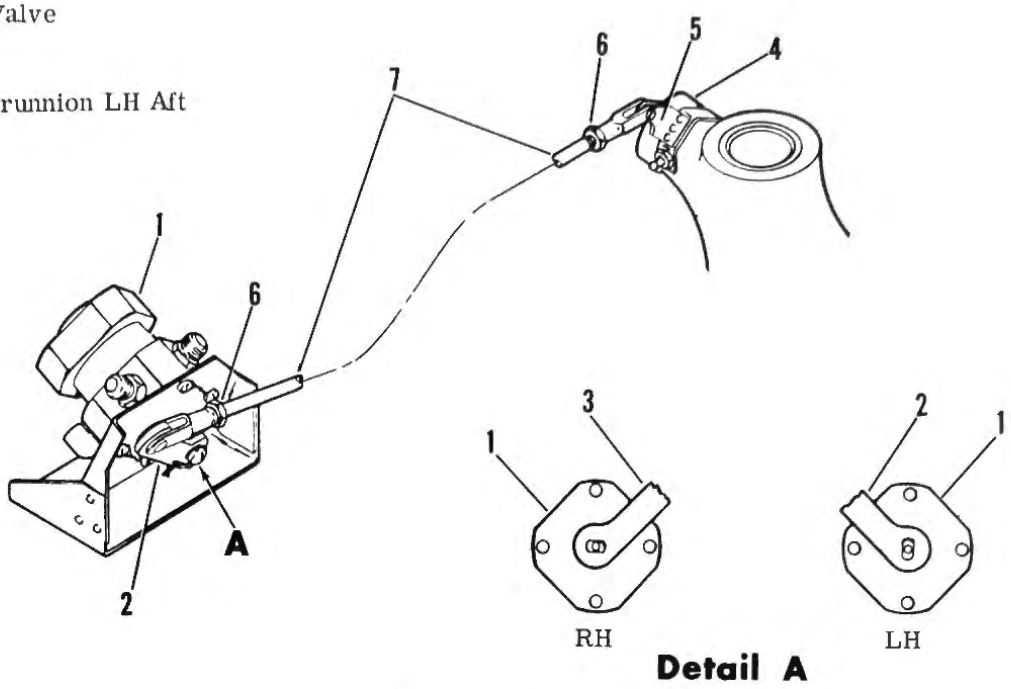

Figure 3-7A. Main Gear Inboard Door Directional Control Valve

Note

When the directional control valve lever moves to extreme inboard it also restricts the inboard door closing while the gear comes up.

h. Connect inboard door to actuator on side being adjusted.

i. Place gear selector switch to gear up and from the opposite wheel well check valve lever for over-travel and valve and door actuator for proper operation.

Note

After each cable adjustment is completed, cycle gear at least twice to determine true extent of adjustment.

j. Place gear selector switch to gear up and observe gear and door for proper operation. Readjust cable if necessary in one-half turn increments.

k. Inspect to assure valve lever screw is safety wired, cable connecting pins are cotter pinned, and all jamnuts for application of locktite.

l. Connect opposite main gear door actuator to door.

m. Connect gear up hose to main gear actuator. (Refer to MAIN GEAR ACTUATOR INSTALLATION, this section.)

n. Cycle landing gear to assure proper operation.

o. Remove portable hydraulic pump from aircraft quick-disconnects.

p. Remove jacks from aircraft.

GEAR DOOR SELECTOR VALVE **B**. (See figure 3-9.) The gear door selector valve is a four-way two-position solenoid-controlled pilot-operated valve. The valve, controlled by the landing gear selector switch on the instrument panel, directs hydraulic fluid to close the main gear inboard doors after the landing gear has extended or retracted. A pneumatic cylinder port is provided to position the valve to "gear down" in the event of electrical system failure.

LANDING GEAR SELECTOR VALVE. (See figure 3-3.) The landing gear selector valve is a four-way two-position solenoid-controlled pilot-operated valve. The valve, controlled by the landing gear switch on the instrument panel, directs hydraulic fluid to retract or extend the landing gear. A pneumatic cylinder port is also provided on the valve to position the spool to "gear down" in the event of electrical system failure.

SHUTTLE VALVES. Shuttle valves are located in the system to isolate the hydraulic system from the pneumatic system. The landing gear may be pneumatically extended through these valves in the event of normal hydraulic system failure. The shuttle valves are repositioned when the emergency air system pressure exceeds that of the normal system.

PRIORITY VALVES. (See figure 3-9.)

a. **A** A 1100 to 1150 psi priority valve is located in the retract line to each main gear actuator. Prior to main gear retraction, initial hydraulic pressure is

A Aircraft 23-003 thru 23-079.

B Aircraft 23-080 thru 23-099.

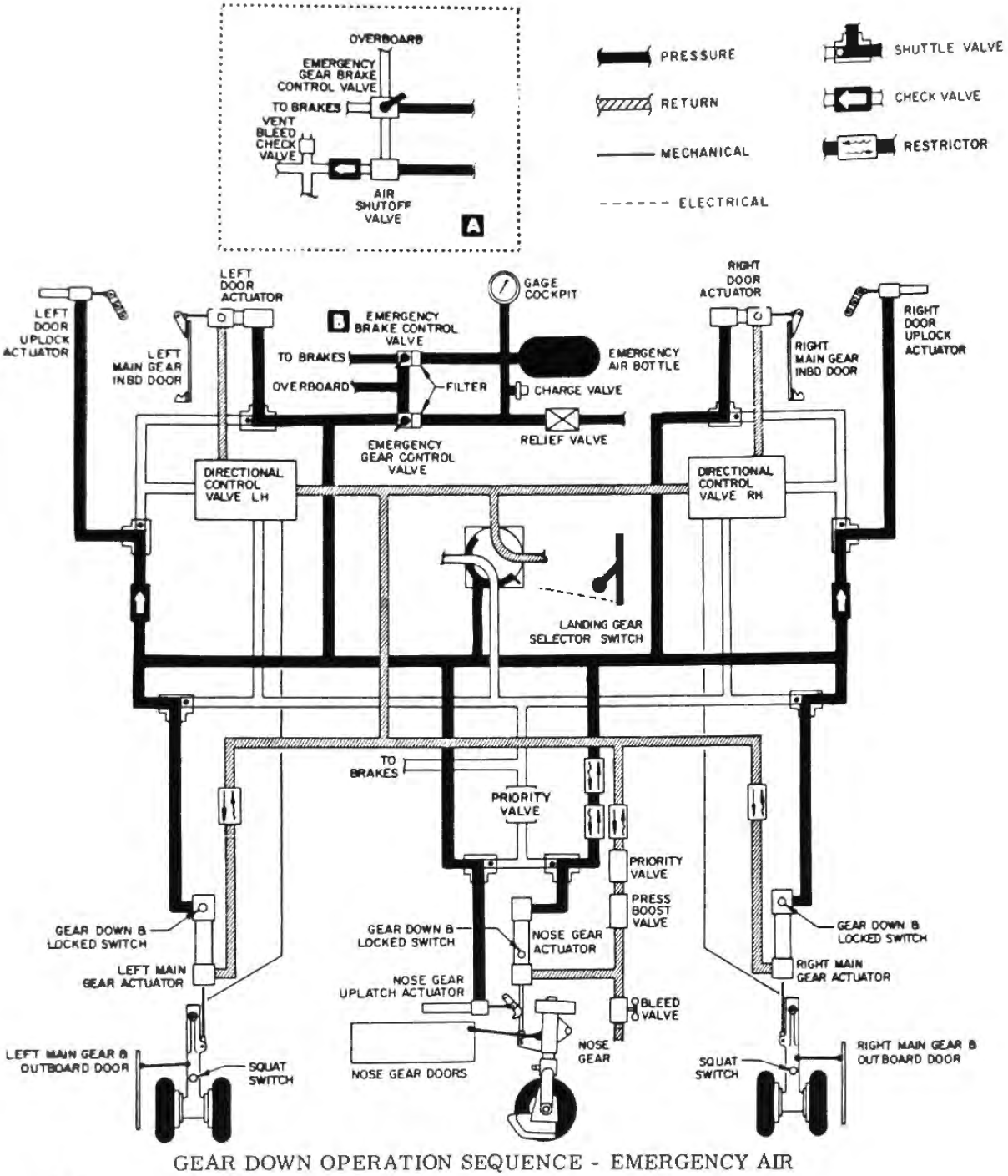

GEAR DOWN OPERATION SEQUENCE - EMERGENCY AIR

1. **A** Emergency Gear Brake Control Valve (**B** Emergency Gear Control Valve) to down position.

Note

Air pressure moves all system shuttle valves to positions shown.

2. Emergency air pressure moves gear selector valve to down position.
3. Air pressure releases the inboard door uplatch actuators and opens the doors. Inboard doors will remain open.
4. Nose gear uplatch actuator releases.
5. Landing gear extends.

A Aircraft 23-003 thru 23-024. Aircraft 23-003 thru 23-079. **B** Aircraft 23-025 thru 23-079

Figure 3-8. Emergency Air Extension System Schematic - Gear Down (Sheet 1 of 2)

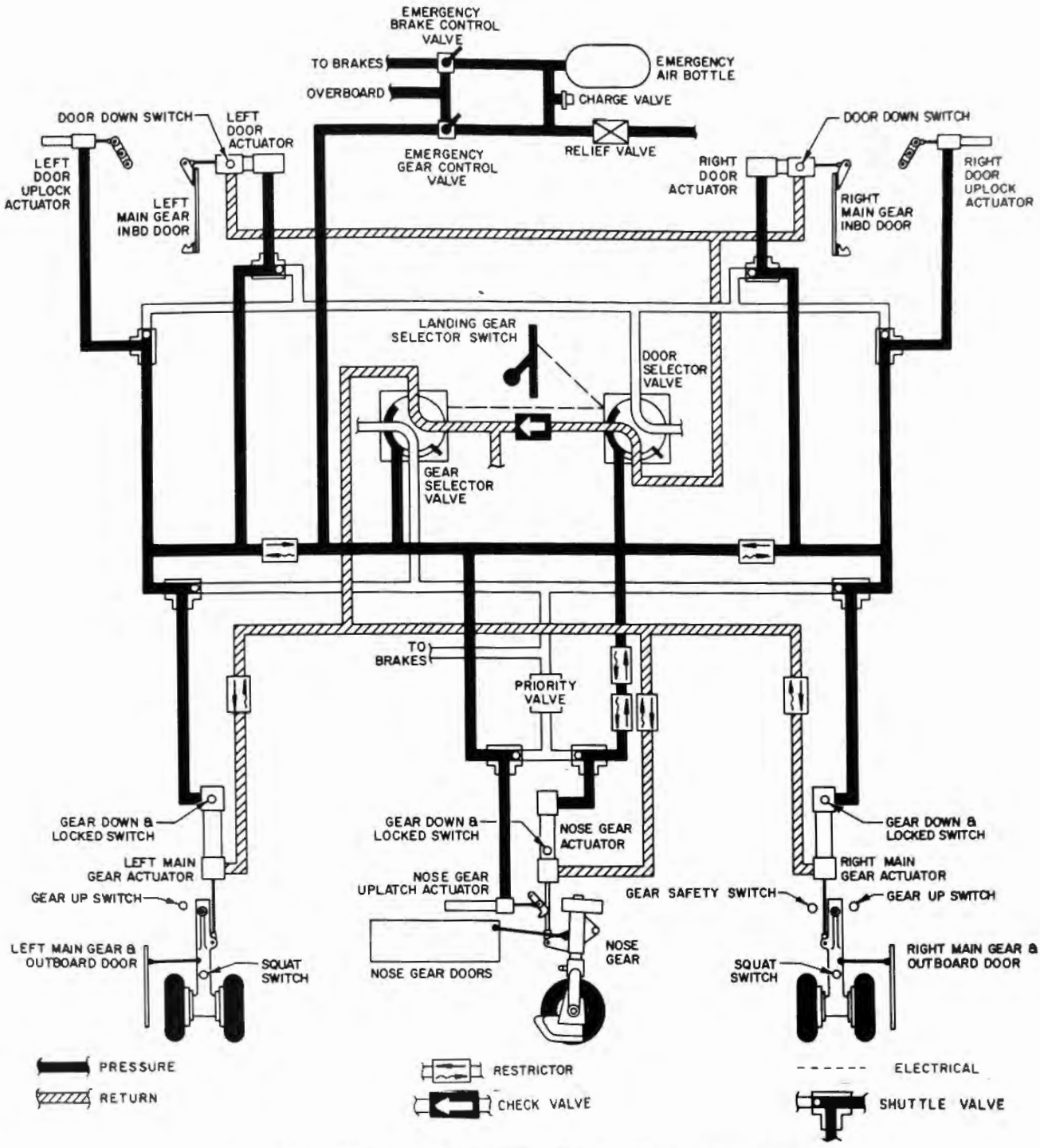

GEAR DOWN OPERATION SEQUENCE - EMERGENCY AIR

1. Emergency Gear Control Valve to down position.

Note

Air pressure moves all system shuttle valves to positions shown.

2. Emergency air pressure moves door selector valve and gear selector valve to down position.
3. Door uplock actuators release and main gear inboard doors open.
4. Nose gear uplatch actuator releases and gear extends. Inboard doors will remain open.

Aircraft 23-080 thru 23-099.

Figure 3-8. Emergency Air Extension System Schematic - Gear Down (Sheet 2 of 2)

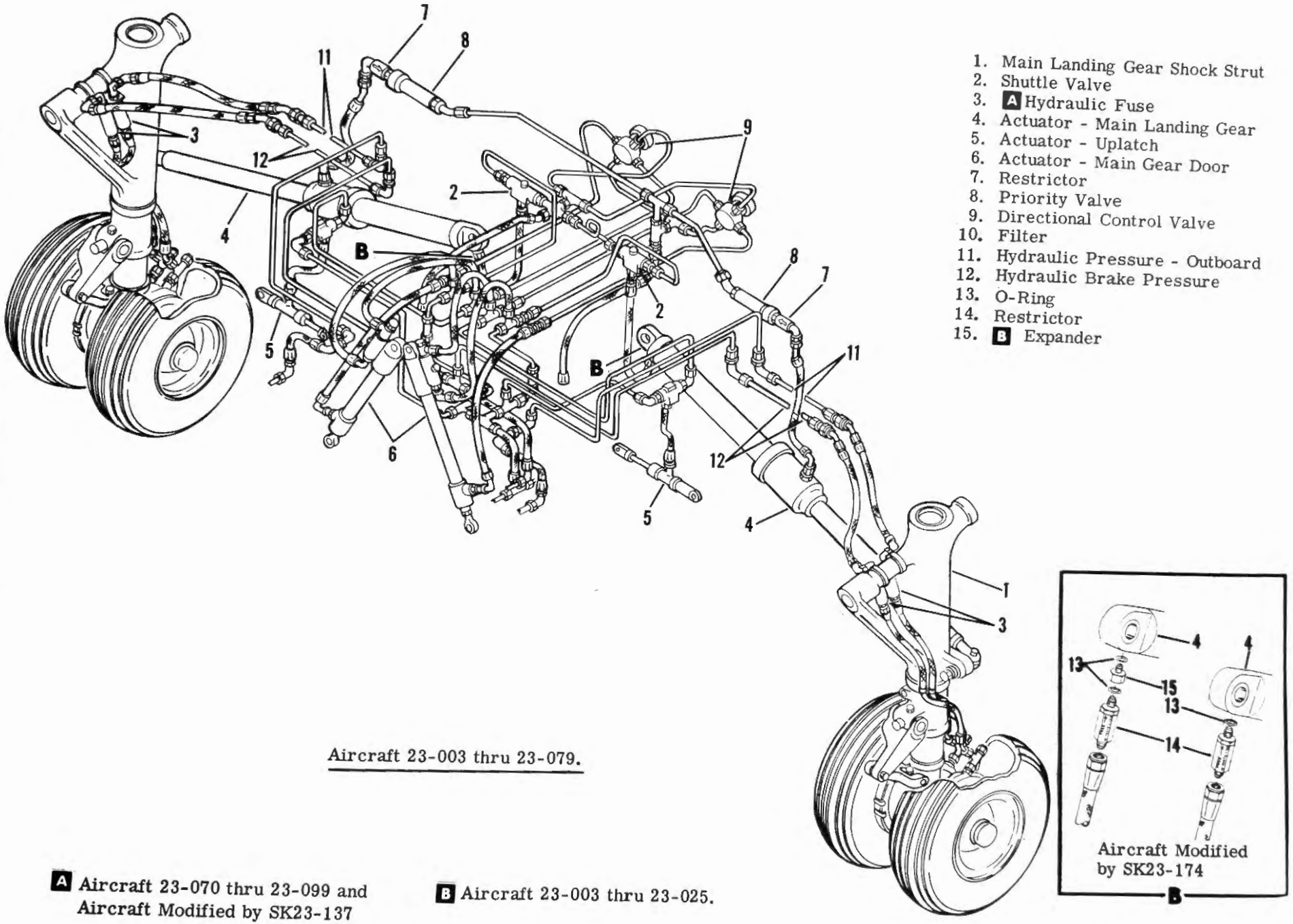

Figure 3-9. Hydraulic Components Installation - Main Landing Gear (Sheet 1 of 2)

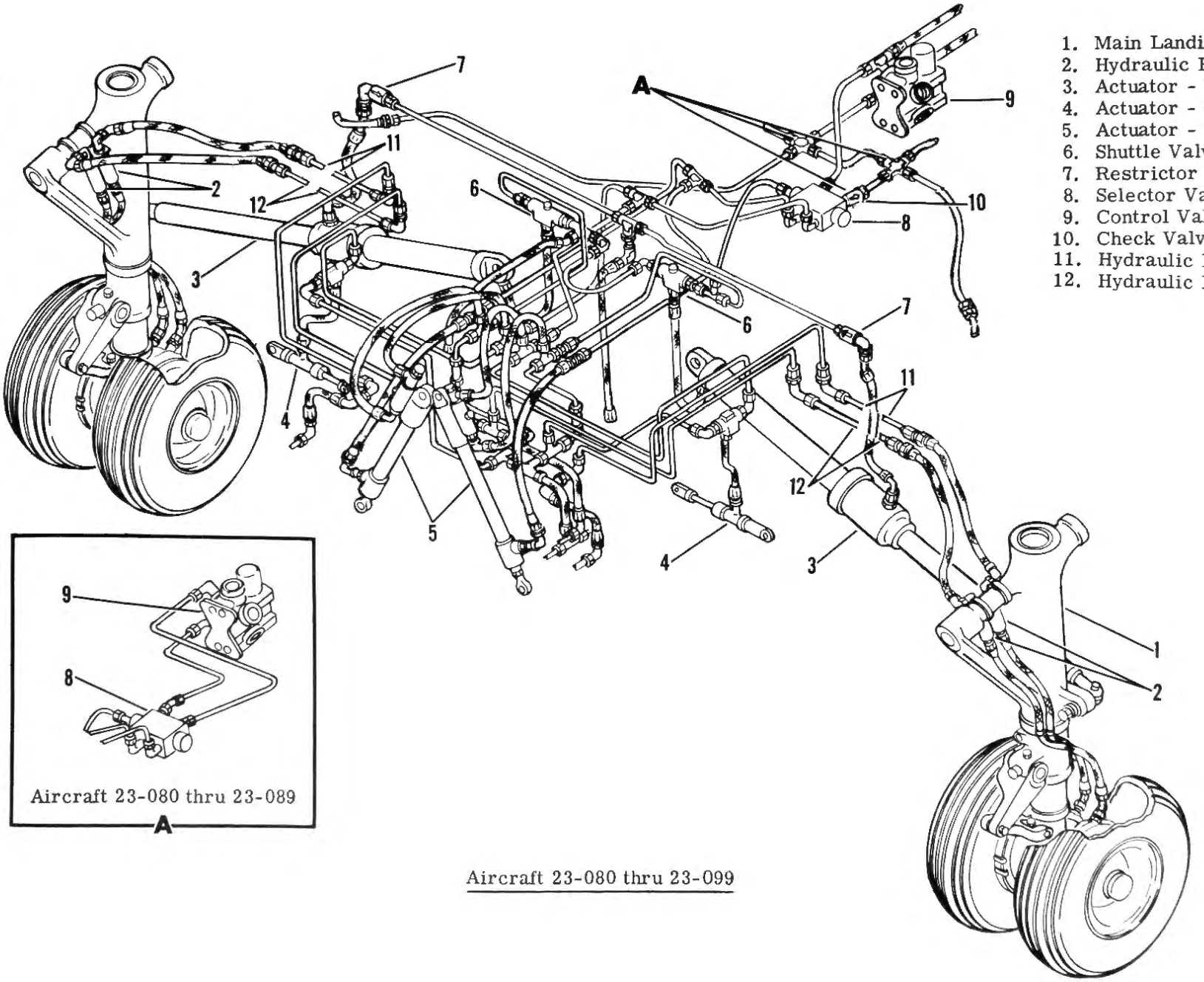

Figure 3-9. Hydraulic Components Installation - Main Landing Gear (Sheet 2 of 2)

1. Parking Brake Valve
2. Power Brake Valve
3. Priority Valve
4. Actuator - Nose Gear
5. Nose Gear Boost Valve
6. Actuator - Nose Gear Latch
7. Shuttle Valve
8. Shuttle Valve - Brake
9. Bleeder Valve
10. Bleed Fitting

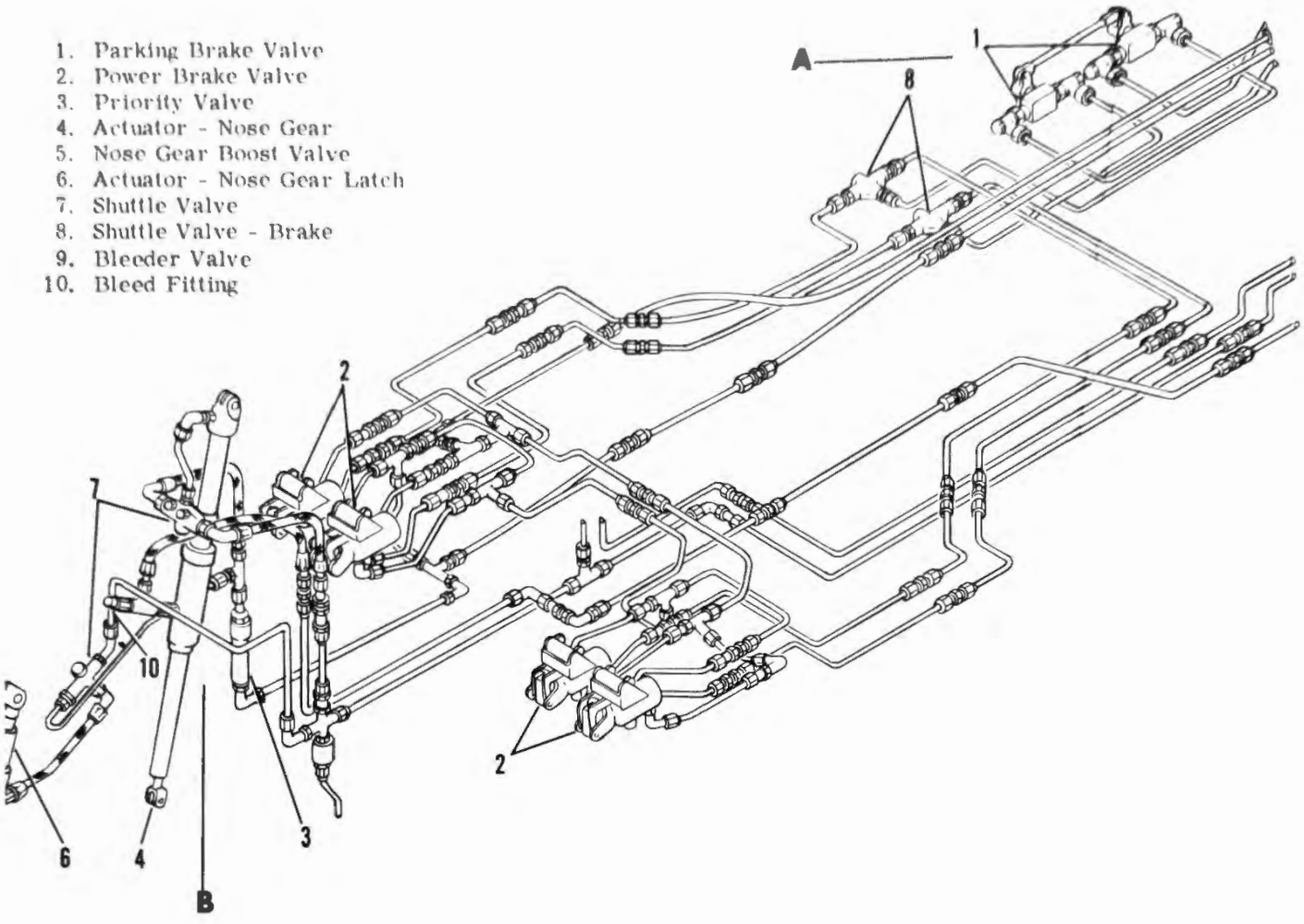

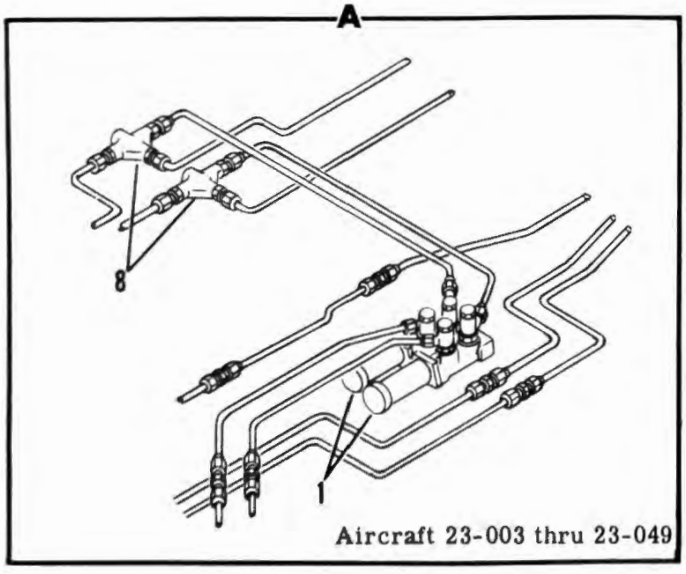

Aircraft 23-003 thru 23-049

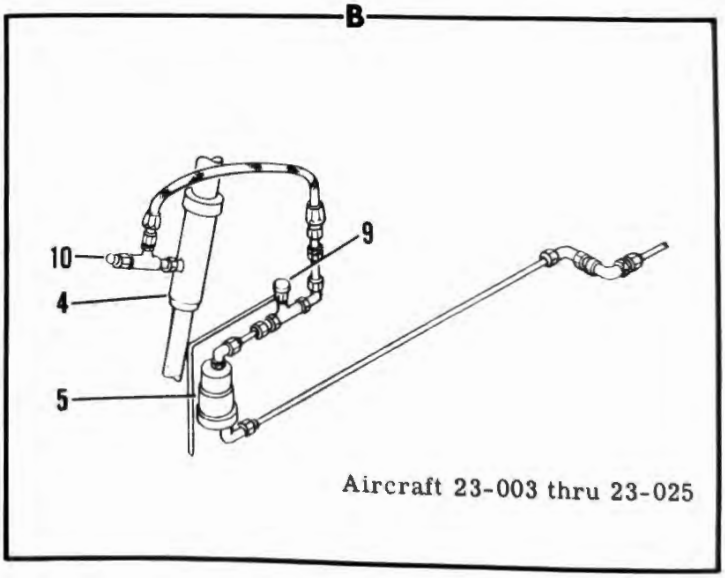

Aircraft 23-003 thru 23-025

Figure 3-10. Hydraulic Components Installation - Nose Section

diverted through the directional control valves to the inboard door actuators. The priority valves open at approximately 1100 psi to provide fluid flow for operation of the main landing gear actuators.

b. [A] A 725 to 775 psi priority valve is located in the nose gear actuator retract line. This valve provides instantaneous hydraulic pressure to the nose gear boost valve to overcome airloads present on the strut during initial gear retraction.

c. A 500 to 550 psi priority valve, located in the nose gear extend line, prevents inadvertent operation of the nose gear uplatch due to back pressure in the gear down line.

NOSE GEAR PRESSURE BOOST VALVE [A]. (See figure 3-10.) A pressure boost valve is installed in the nose gear retract line. The valve increases normal hydraulic system pressure from 1500 psi to approximately 2340 psi for increased nose gear retraction speed. The boost valve is located in the nose gear compartment between frames 4 and 5.

BLEEDING NOSE GEAR HYDRAULIC SYSTEM [A]. (See figures 3-10 and 3-12.) The system should be bled when a line is opened or when air in the system is evident. When the nose gear will not completely retract and the doors will not close with normal pressure, air in the system is indicated.

a. Place aircraft on jacks with gear clear of ground level.

b. With the gear down and locked, attach a hydraulic pressure source with a 0 to 3000 psi gage to the nose gear actuator bleed fitting.

Note

The hose shall be long enough and shall be indexed so as to assure that it does not interfere with aircraft equipment when the gear is retracted.

c. Remove the hydraulic reservoir filler cap.

d. Pump fluid back through the lines to the reservoir until all air is bled from the system.

e. To determine if all air is bled from the system, perform the following:

f. Retract landing gear while observing the pressure gage installed in step b.

g. Depress bleeder valve to bleed air from nose gear boost valve.

Note

The pressure gage should indicate approximately 1500 psi with the nose gear fully retracted. If gage does not indicate 1500 psi, the system still contains air and further bleeding is required until this pressure is obtained. It may be necessary to extend and retract the gear to completely bleed the system.

h. Disconnect test hose from actuator bleed fitting and install cap.

i. Assure that all circuit breakers are depressed, gear selector switch "DOWN," electrical power and hydraulic pressure on the aircraft, and all indicator lights showing the "GEAR DOWN & LOCKED" before removing aircraft from jacks.

Note

[B] Bleed air from system by attaching a hydraulic pressure source capable to 0 to 3000 psi to tailcone quick-disconnect fittings and operate landing gear system through at least five complete cycles.

LANDING GEAR SYSTEM. (See figures 3-5, 3-6, and 3-7.) The landing gear is a conventional retractable tricycle gear with pneudraulic shock struts. The main gear incorporates dual wheels, each with individual wheel braking. The nose wheel is steerable.

a. Gear Operation - Normal. The landing gear is retracted or extended by operating the landing gear switch on the instrument panel. Setting the switch to GEAR UP initiates a sequence of all three gear systems. The inboard main gear doors are opened, the gear is retracted and the doors are then closed to provide a clean flight configuration. The nose gear doors are attached by linkage to the nose gear and close when the gear retracts. Setting the switch to GEAR DOWN reverses the sequence.

Note

The main gear inboard doors close on completion of gear extension.

b. Gear Operation - Emergency. In the event of main hydraulic system failure, landing gear control system malfunction, or electrical system failure, the gear may be extended pneumatically. Emergency extension is initiated by depressing the [C] "emergency landing gear and brake control" handle located on the right side of the center pedestal. The handle must be lowered and held until all three gears are down and locked. On [D] "emergency gear extension" handle is located on the left side of the center pedestal and has a ratchet mechanism which holds it down. Air under pressure from the emergency air bottle is directed through lines and shuttle valves to:

1. The nose gear uplatch actuator.
2. The down side of the nose gear actuator.
3. The main gear inboard door uplatch actuators.
4. The down side of the main gear inboard door actuators.
5. The down side of the main gear actuators.

After landing, the [C] "emergency landing gear and brake control" handle or the [D] "emergency brake" handle should be depressed as required to apply the emergency wheel brakes. The "emergency brake"

[A] Aircraft 23-003 thru 23-025.
[B] Aircraft 23-026 thru 23-099.
[C] Aircraft 23-003 thru 23-024 except aircraft modified by SK23-43.
[D] Aircraft 23-025 thru 23-099 and aircraft modified by SK23-43.

handle is located on the right side of the center pedestal.

Note

The normal landing gear control switch should first be set to the DOWN position to avoid subsequent accidental retraction of the gear and to obtain proper safe indications from the gear position lights.

LANDING GEAR SYSTEM TROUBLE SHOOTING. (See figure 3-11.) (Refer to Section IX for wiring diagram.) Observe the following information prior to performing landing gear system trouble shooting and maintenance.

a. Refer to the following landing gear switch adjustment procedures, this section.
   1. LANDING GEAR HYDRAULIC SYSTEM for adjustment of main gear sequence switches.
   2. MAIN GEAR INBOARD DOOR UPLATCH - ADJUSTMENT for door up switches.
   3. RIGGING NOSE GEAR UPLATCH for nose gear up and locked (uplatch) switch.
   4. NOSE GEAR ACTUATOR DOWN LOCK SWITCH ADJUSTMENT for nose gear down and locked switch.
   5. THROTTLE AURAL WARNING SWITCH ADJUSTMENT for throttle switches. (Refer to Section II.)

b. Jack aircraft until gear clears ground.

c. Depressurize hydraulic system. (Refer to HYDRAULIC SYSTEM, this section.)

Note

If emergency air gear blowdown was required prior to landing, the main gear inboard doors will be open. Omit step d.

d. Release main gear inboard door uplatch hooks and lower doors. (Refer to Removal of Inboard Gear Door, this section.)

CAUTION

If emergency gear blowdown has occurred, assure that all air is released from the landing gear system lines. (See LANDING GEAR EMERGENCY EXTENSION AIR SYSTEM, this section.) To prevent possible reservoir damage, this must be accomplished before performing normal hydraulic system bleeding procedures.

e. Bleed air from hydraulic system if gear blowdown has occurred.

f. Disconnect inboard door actuators from doors.

g. Disconnect main gear outboard doors and nose gear door linkage.

h. Connect aircraft batteries.

Note

During gear cycling, observe main gear inboard door actuators for door operation.

i. When checking a particular electrical system circuit, check voltage and ground points at all valve and switch locations.

j. Connect main gear inboard door actuators to doors and outboard gear door and nose gear door linkage.

CAUTION

Do not remove aircraft from jacks until the landing gear is fully extended to the down and locked position with all (green) locked down lights lighted.

k. After completion of trouble shooting, cycle gear for proper operation.

GEAR INDICATION. (See Section IX for wiring diagram.)

a. The purpose of this system is to provide indication of landing gear position. The malfunction of any of the electrical components of this system will not affect ultimate landing gear operation as the two systems are on different circuits.

b. The indication circuit is designed so that integral switches in the nose gear and main gear actuators provide the down and locked indication and the uplatch switches on the main gear inboard doors provide the up indication.

c. When the landing gear selector switch is set to GEAR DOWN, and the gear extends, the corresponding green (locked down) indicator lights as each gear is down and locked. When the landing gear selector switch is changed, the red (unsafe) indicator lights and remains lighted until the last gear attains the selected switch setting, provided the thrust levers are advanced beyond the 70% position. If the landing gear selector switch is set to GEAR UP and one set of doors does not close and lock, the red (unsafe) indicator will remain lighted.

d. A landing gear aural warning horn sounds when the thrust levers are retarded below 70% rpm until the landing gear is down and locked. A switch with MUTE and TEST positions is provided for aural warning control and testing.

NOSE LANDING GEAR. (See figure 3-12.) The nose landing gear consists of the nose wheel, tire, and splash skirt mounted on a conventional air-hydraulic shock strut which is housed in and attached to the fuselage structure by bearing plates. Further support is obtained from the nose gear actuator which is attached at the midpoint of the shock strut and to the fuselage structure. The gear retracts forward and into the wheel well. Split-type doors cover the wheel well when the nose gear is retracted. The doors remain open when the nose gear is extended.

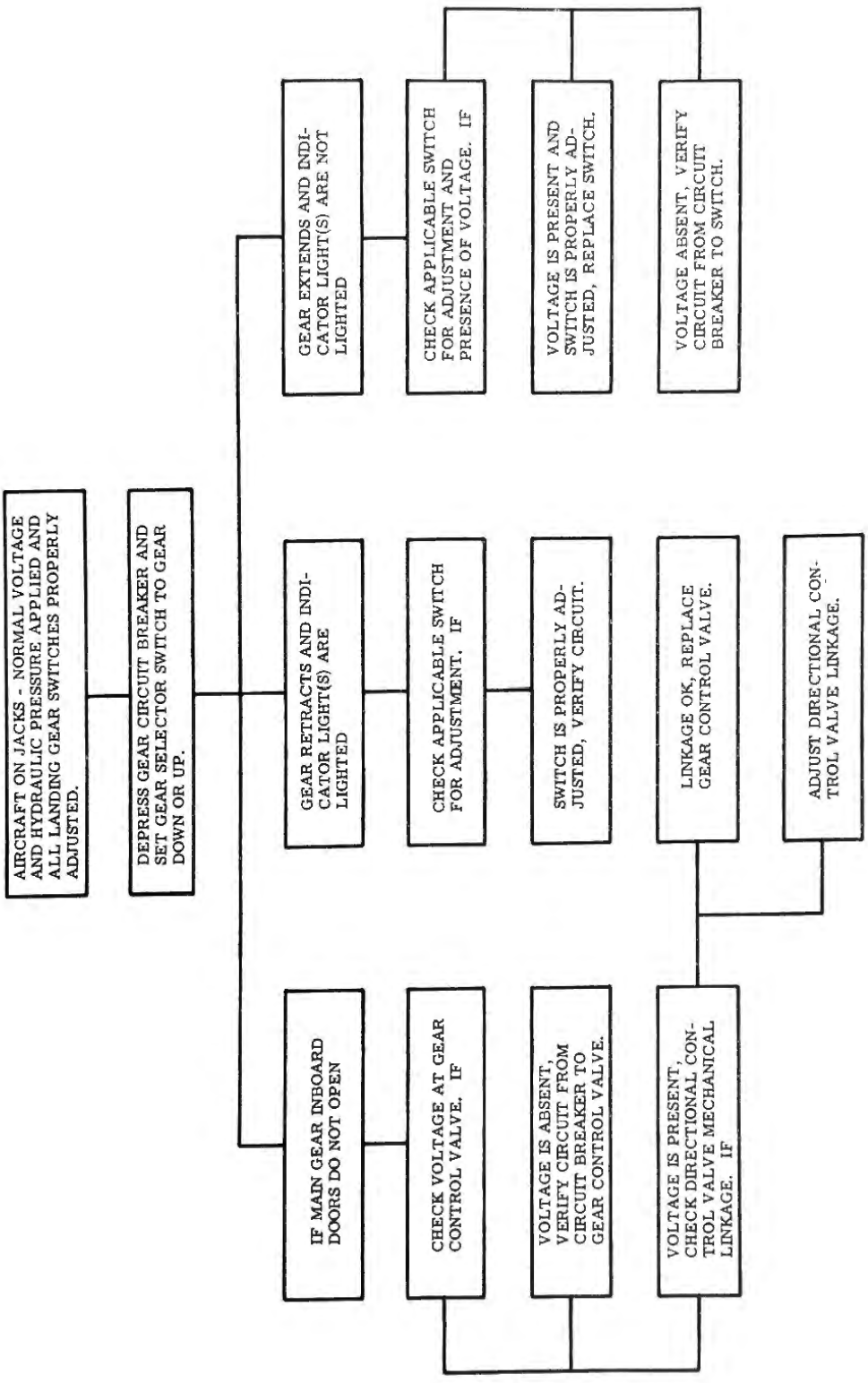

Aircraft 23-003 thru 23-079.

Figure 3-11. Trouble Shooting Chart - Landing Gear (Sheet 1 of 3)

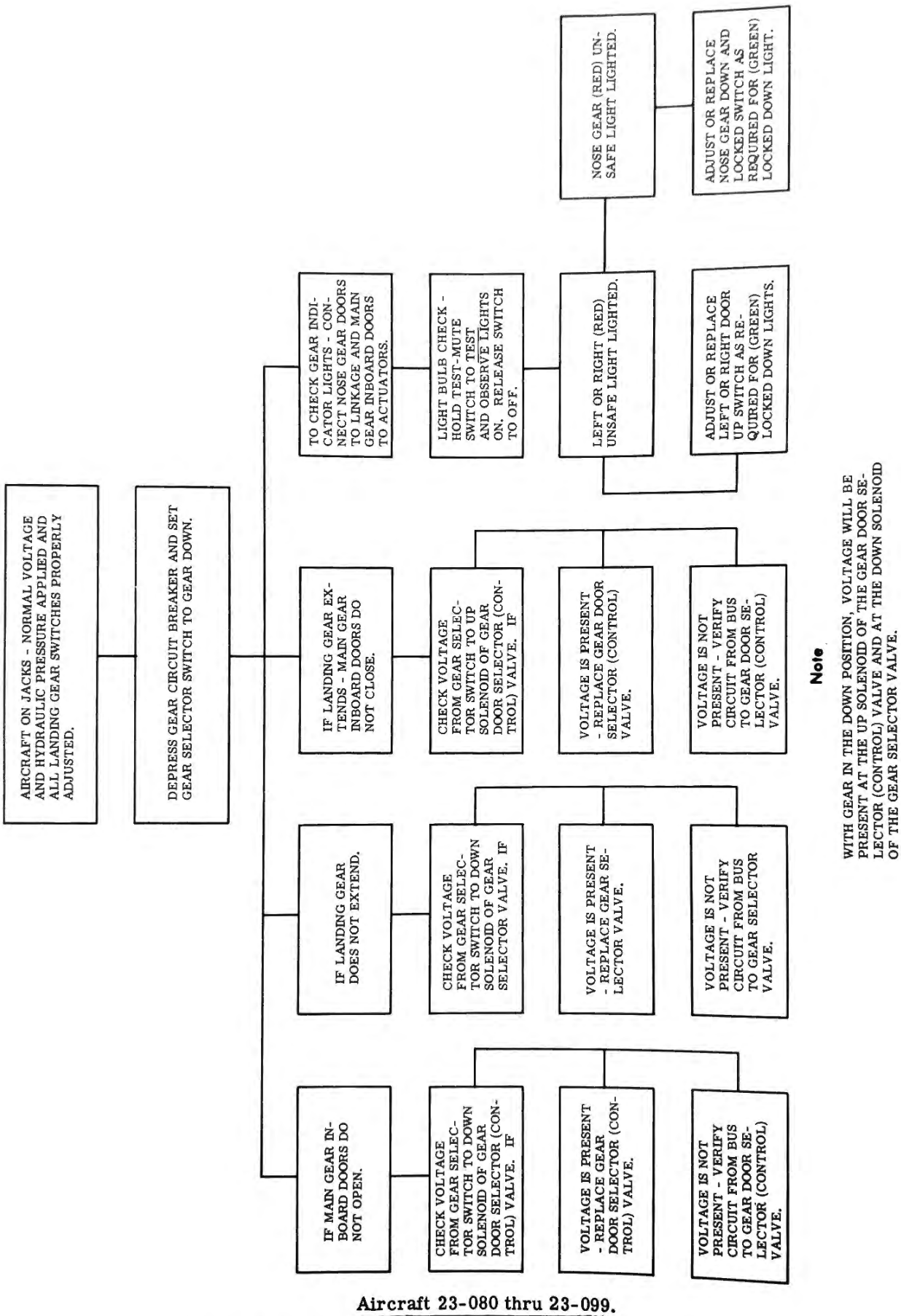

Aircraft 23-080 thru 23-099.

Figure 3-11. Trouble Shooting Chart - Landing Gear (Sheet 2 of 3)

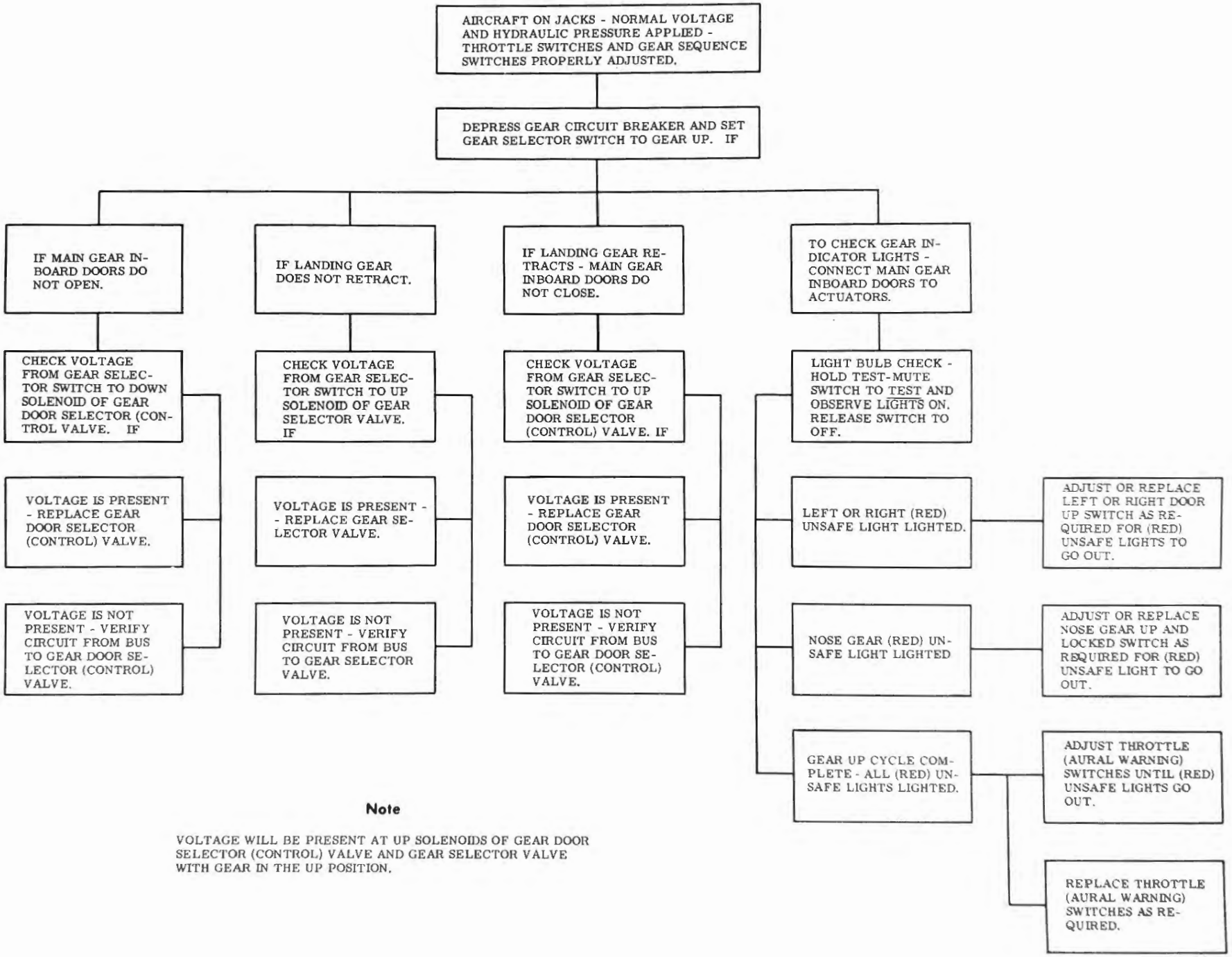

Aircraft 23-080 thru 23-099

Figure 3-11. Trouble Shooting Chart - Landing Gear (Sheet 3 of 3)

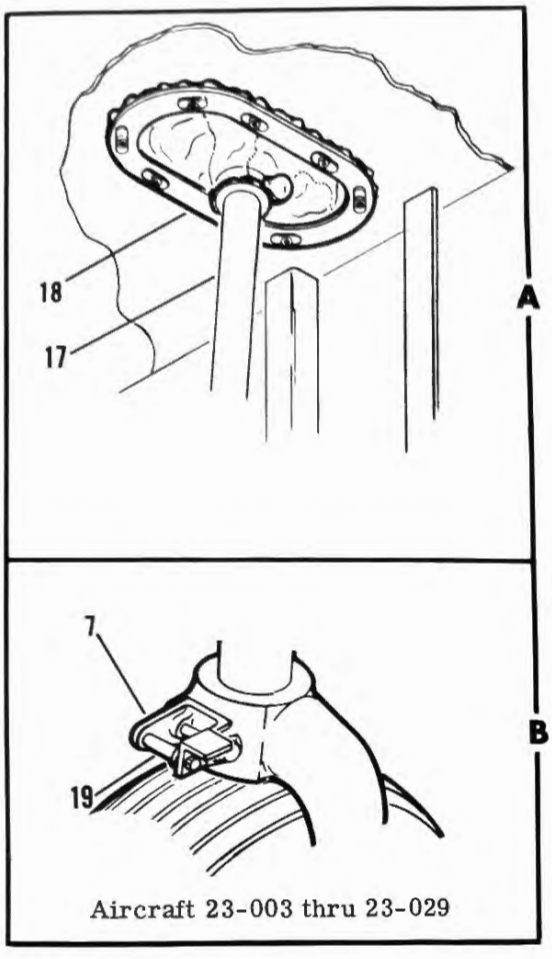

Aircraft 23-003 thru 23-029

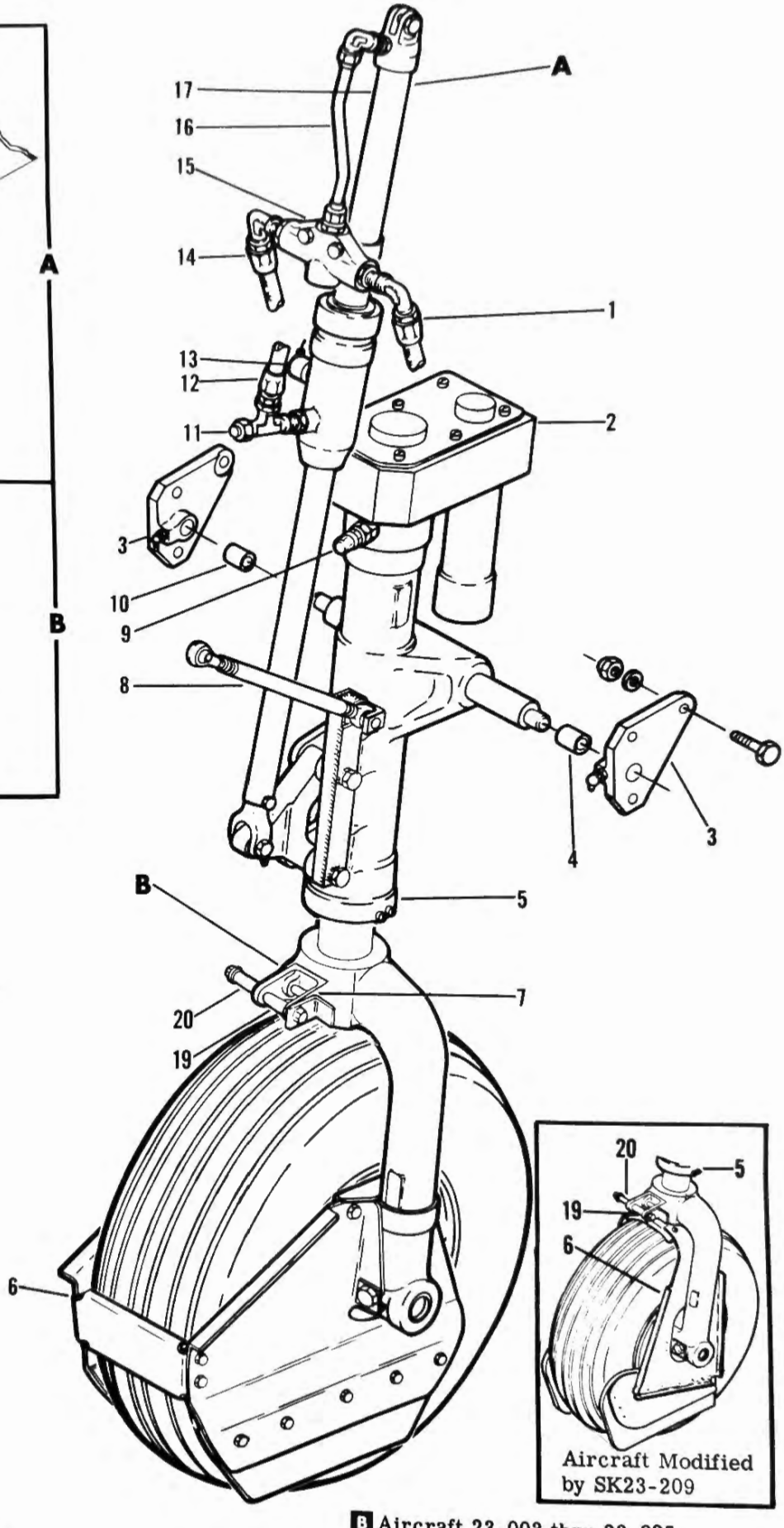

Aircraft Modified by SK23-209

1. Hydraulic Hose - Nose Gear Emergency Extend
2. Nose Wheel Steering Actuator
3. Bearing Plate
4. Bearing - LH
5. Nose Gear Strut
6. Splash Skirt
7. Uplatch Roller Bracket Assembly
8. Door Link
9. Valve - Air Charging
10. Bearing - RH
11. [B] Bleed Fitting
12. Hydraulic Hose - Nose Gear Retract
13. Downlock Switch
14. Hydraulic Hose - Nose Gear Extend
15. Shuttle Valve
16. Hydraulic Tube - Nose Gear Extend
17. Nose Gear Actuator
18. Actuator Boot
19. Uplatch Spacer
20. [A] Uplatch Roller

[A] Aircraft 23-060 thru 23-099 and Aircraft Modified by SK23-129

[B] Aircraft 23-003 thru 23-025.

Figure 3-12. Nose Gear Installation

NOSE LANDING GEAR WHEEL. (See figure 3-13.) The nose landing gear wheel consists of a LH and RH wheel half. The wheel halves are fastened together with bolts, washers and nuts with an O-ring seal between them to retain air pressure. An air valve is installed for tire servicing. The standard wheel delivered with the aircraft was made of cast aluminum; however, an optional wheel made of magnesium alloy may have been installed concurrently with optional Service Kit SK23-219 (Heavy Duty Wheel and Brake Installation).

NOSE LANDING GEAR WHEEL - REMOVAL. (See figure 3-13.)

a. Place aircraft on jacks and deflate tire by removing valve cap and valve core.

WARNING

Do not loosen or remove wheel bolts until the tire is completely deflated. Failure to comply can cause bodily injury.

b. Remove cotter pins, nuts, and axle washer from nose gear axle. (See figure 3-14.)

c. [A] Remove attaching parts and nose wheel splash skirt from nose wheel.

d. [B] Remove the two upper screws from right side of splash skirt to free outer skirt half from wheel.

e. Remove O-rings and wheel bearing spacer, then slide wheel from axle.

CAUTION

When removing wheel from aircraft, do not drop or damage bearing cones or seals. Disassemble wheel on a clean, smooth, flat surface to prevent damage to wheel halves.

NOSE LANDING GEAR WHEEL - DISASSEMBLY. (See figure 3-13.)

Note

Inspect aircraft wheel halves each time the tire is removed. Perform inspection in accordance with NOSE GEAR WHEEL - INSPECTION, this section. This will preclude flight delays by detecting possible wheel failures before they occur.

a. Break tire beads from both wheel halves. Apply even pressure around the entire sidewall as close as possible to the tire beads.

b. Remove self-locking nuts, washers, bolts, and countersunk washers.

CAUTION

Use care when separating wheel halves to prevent damage to wheel O-ring seal.

Note

- Valve stem removal is not required at tire change, but should be removed for inspection purposes at wheel overhaul.
- Bearing cups are shrunk fit into the wheel halves and should not be removed unless replacement is required. If a bearing cup is to be removed, drive out bearing cup with a fiber drift pin.

c. Clean all metal parts in P-S-661 cleaning solution and wipe dry with a clean lint-free cloth.

d. Clean bearings in a separate clean container and dry with filtered compressed air.

CAUTION

To prevent bearing damage, do not spin when air drying or allow to soak in cleaning solution.

e. If wheel O-ring seal is to be reused, clean with denatured alcohol and dry with a lint-free cloth.

Note

Lay seal on a flat surface to prevent stretching while drying.

NOSE LANDING GEAR WHEEL - INSPECTION. (See figure 3-13.)

a. Visually inspect all metal parts for scratches, nicks, cracks, distortion, or other damage. Replace all damaged parts.

Note

Suspected areas should be thoroughly checked by fluorescent penetrant, dye check, acetic acid etch, or other suitable means. Replace all damaged parts.

b. Small nicks or scratches should be polished out with fine sandpaper and refinished with two coats of MIL-L-8585 zinc chromate primer and two coats of MIL-L-7178 lacquer. Refinish wheel register areas with a mist coat of zinc chromate primer only.

c. Check threaded parts for stripped, crossed, or damaged threads.

d. Inspect gaskets and wheel O-ring seal for damage, distortion, or wear.

e. Check all bolts for deformation and cracks at head junction and first two threads adjacent to shank with a 10-power magnifying glass or by magnetic particle inspection.

f. Inspect self-locking nuts. Replace nuts after reusing 10 times or if nuts can be turned past self-locking position by hand.

g. Check bearing cups for looseness, rust, pitting, and nicks.

h. Inspect bearing cones for cage or roller wear, nicks, rust, pitting, or other damage.

i. On magnesium-type wheels, check rubber bearing seals for cuts, nicks, and wear.

NOSE LANDING GEAR WHEEL - REASSEMBLY. (See figure 3-13.)

a. Reassemble nose landing gear wheel in reverse order of disassembly.

[A] Aircraft 23-003 thru 23-099 except aircraft modified by SK23-209.

[B] Aircraft 23-003 thru 23-099 modified by SK23-209.

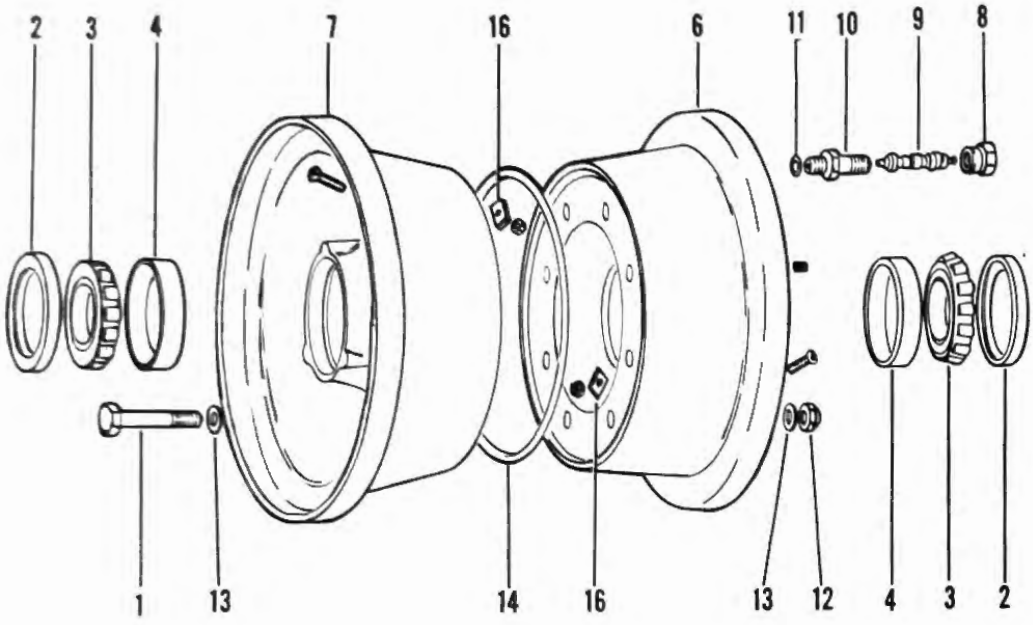

Aircraft 23-003 thru 23-099 except aircraft with magnesium-type wheels installed.

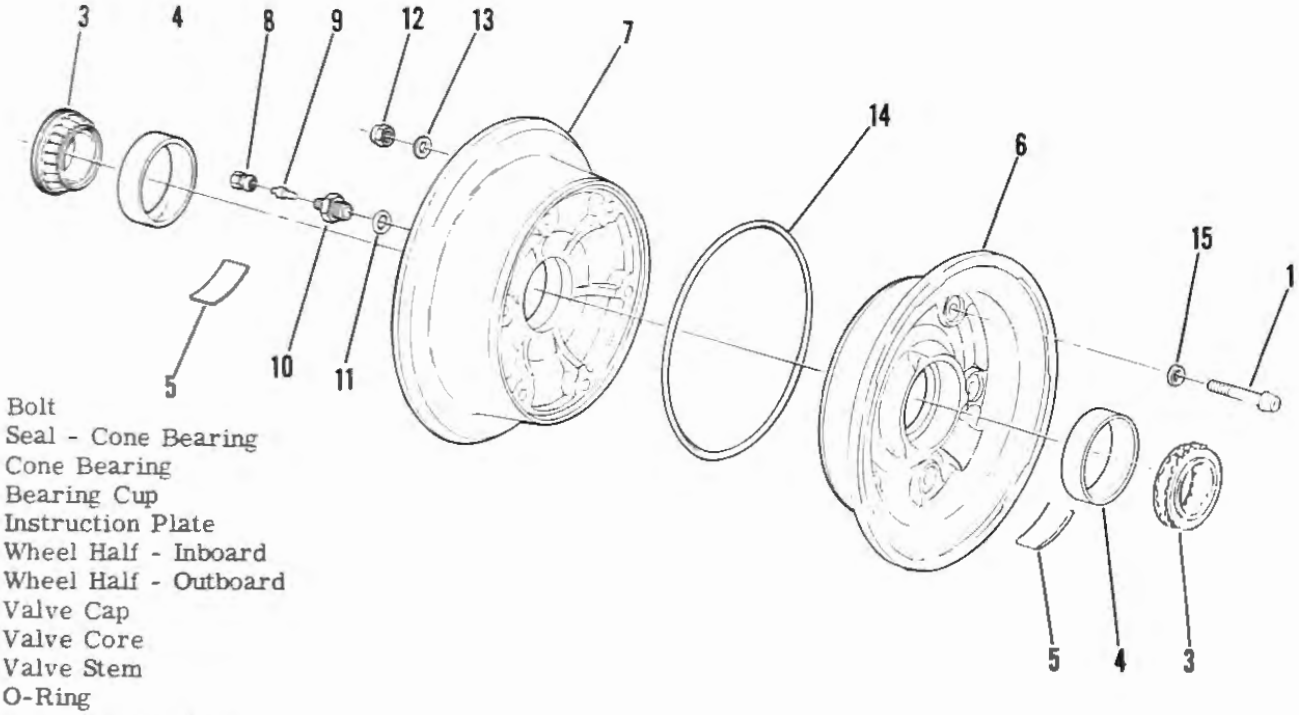

1. Bolt
2. Seal - Cone Bearing
3. Cone Bearing
4. Bearing Cup
5. Instruction Plate
6. Wheel Half - Inboard
7. Wheel Half - Outboard
8. Valve Cap
9. Valve Core
10. Valve Stem
11. O-Ring
12. Nut - Self-Locking
13. Washer
14. Wheel O-Ring
15. Washer - Countersunk
16. Balance Weight

Aircraft 23-003 thru 23-099 when equipped with magnesium-type wheels.

Figure 3-13. Nose Landing Gear Wheel Assembly

Note

Apply one coat of MIL-L-8585 zinc chromate primer on packing groove and mating surfaces of wheel halves. No primer finish coat required.

b. Replace worn [A] seal (2) or bearings (3) at overhaul.

c. Replace bearing cups (4) as follows:

Note

Use extreme care not to damage bearing cup seat.

1. Using a drift pin, drive out old bearing cups.
2. Heat wheel halves to [A] 149° C (300° F) or [B] 121° C (250° F) maximum and cool bearing cups to -18° C (9° F).
3. Remove wheel half from heat source and immediately install bearing cup by tapping in place with a fiber drift pin. Assure that cup is fully seated in wheel hub.

d. To replace valve stem, lubricate O-ring with a light coat of MIL-G-4343 grease and install on stem.

e. Screw valve stem into wheel half and torque to 180 to 200 inch-pounds.

f. Wipe off bead seat area, wheel register, and tire beads with a clean lint-free cloth dampened with denatured alcohol.

g. Visually inspect tire for damage with emphasis on bead area.

h. Lubricate wheel O-ring seal with a light coat of MIL-G-4343 grease.

i. Place machined grooved wheel half on a clean, flat surface and install wheel O-ring seal.

Note

Assure that O-ring seal is not twisted during installation. Reused O-ring seals should be installed as near as possible to their original position.

j. Deleted.

k. Place tire on machined grooved wheel half so that tire red balance dot is [A] aligned on steel stamped letter (L) or on [B] centered on large weight pad. Do not disturb wheel O-ring seal.

Note

On [A] a letter (L) steel-stamped on the outer edge of the LH and RH wheel half flanges indicates the lightest portion of the wheel. On [B] the machined grooved wheel half balance pad is an area built up between two bolt holes.

l. Place remaining wheel half in tire with [A] steel-stamped letter (L) 180° opposite steel-stamped letter (L) in machined grooved wheel half and align bolt holes. On [B] place remaining wheel half in tire with valve stem aligned with tire red balance dot and align bolt holes.

m. Lubricate bolt threads and bearing surfaces with MIL-T-5544 anti-seize compound.

n. Deleted.

o. [A] Install bolts and tighten nuts from 70 to 90 inch-pounds torque in a criss-cross sequence across diameter. Recheck torque once around before tire inflation.

p. [B] Install countersunk washers with countersunk portion of washers facing bolt heads.

q. [B] Install bolts and countersunk washers through inboard and outboard wheel halves. Attach with washers and self-locking nuts.

r. [B] Tighten self-locking nuts to 120 inch-pounds in a criss-cross sequence around wheel.

s. Install valve core in valve stem and inflate tire sufficiently to seat tire beads.

t. Pack cone bearings with MIL-G-81322 (preferred) or MIL-G-3545 grease and spread an even coat of grease on bearing cups and on [A] cone bearing seals.

NOSE LANDING GEAR WHEEL - INSTALLATION. (See figure 3-14.)

a. Assemble wheel on axle as follows:
   1. Install one O-ring (48) and one wheel bearing spacer (41) on axle.
   2. Refer to figure 3-13.) Install [A] cone bearing seal (2), cone bearing (3), wheel assembly, cone bearing (3), and [B] cone bearing seal (2) on axle.
   3. Install remaining O-ring (48), wheel bearing spacer (41), washer (47), axle washer (43), and wheel nut (49) on axle.

b. Tighten inner wheel nut to 80 inch-pounds, back to zero, and retighten to 60 inch-pounds. If cotter pins cannot be installed, advance wheel nut until cotter pins can be installed. Install cotter pins and secure.

c. Install outer splash skirt half and splash skirt nut.

d. Lockwire splash skirt nut per double twist method.

NOSE GEAR SHOCK STRUT. (See figure 3-14.) The nose gear shock strut is a conventional air-hydraulic unit designed to absorb the shock of landing, takeoff, and taxiing. It is essentially a steel piston riding in a cylinder and utilizing O-rings and backup rings to prevent leakage between the piston and the outer cylinder. The wheel axle is keyed to the strut by a bolt. An electrical steering actuator, mounted on top of the

[A] Aircraft 23-003 thru 23-099 except aircraft with magnesium-type wheels installed.

[B] Aircraft 23-003 thru 23-099 when equipped with magnesium-type wheels.

strut, controls the wheel direction by a telescoping shaft arrangement sealed at the top of the strut with an O-ring and engaged to the lower half of the strut by a square or splined drive. An air-oil filler valve is provided on the strut and a placard indicates the correct strut pressure for a given strut extension.

NOSE GEAR SHOCK STRUT - TROUBLESHOOTING

TROUBLE	PROBABLE CAUSE	CORRECTION
AIR LEAK AT AIR VALVE.	Worn or loose air valve.	Replace air valve.
FLUID LEAK AT CYLINDER.	Worn or damaged "O" rings or backup rings.	Replace "O" rings and backup rings.
PISTON STICKS OR BINDS.	"O" rings, backup rings or rod scraper damaged. Scoring in cylinder bore or piston.	Clean thoroughly and replace damaged parts. Inspect and replace damaged parts.
PISTON ASSEMBLY SHIMMY.	Worn or jammed needle bearing or thrust plates.	Replace defective parts.

NOSE GEAR SHOCK STRUT - REMOVAL. (See figure 3-12.)

a. Place the aircraft on jacks.

Note

Depressurize hydraulic system by operating flap switch alternately to extend and retract.

b. Remove safety wire and disconnect aircraft batteries.

c. Remove cap from air valve and depress valve pin until all air is released from strut.

d. Remove attaching parts and door link (8) from nose gear strut.

e. Disconnect nose gear actuator from nose gear strut at strut attach point.

Note

An electrical plug, installed on the nose wheel box, connects nose gear wiring to aircraft wiring.

f. Disconnect electrical plug and remove wiring clamps as necessary to allow removal of nose gear strut.

g. Support the nose gear to prevent possible damage when trunnion pins are removed.

h. (Refer to figure 3-14.) Remove RH and LH bolt (17) from nose gear trunnion. Insert small punch into slot (lower side of trunnion) and slide trunnion pins (6) inboard (towards strut) until free from bearing plates.

i. Remove strut from aircraft.

NOSE GEAR SHOCK STRUT - DISASSEMBLY. (See figure 3-14.) During disassembly, tag and keep all parts together for reassembly into the same unit.

WARNING

Before performing any disassembly of parts on the strut, ensure that all air pressure has been released through the air valve. Failure to do so can cause bodily injury. Do not release air by loosening or removing air valve, the valve interior, or any other part.

a. Cut lockwire, remove fill plug (4) and air valve (10).

b. Drain hydraulic fluid through air valve and port openings. Move piston through stroke to aid in draining.

c. Remove nose wheel steering actuator. (Refer to NOSE WHEEL STEERING ACTUATOR - REMOVAL AND DISASSEMBLY, this section.)

d. Do not remove nameplate (1) unless it is damaged.

e. Remove lockwire from screws (19 and 20) at lower end of cylinder.

f. With piston extended, remove cylinder screw (20), retaining lock screw (19), and retaining ring lock (21).

g. Disengage snap ring (38) from its groove in cylinder (18).

h. Remove cotter pin, nut, washers, shim, and seal retainer at upper end of strut, and slide the piston straight out of cylinder.

1. Name Plate
2. Strap
3. Seal
4. Plug
5. Gasket
6. Trunnion Pin
7. Trunnion Pin Support
8. Washer
9. Nut
10. Air Valve
11. Reducer
12. Packing
13. Cotter Pin
14. Shim
15. Seal Retainer
16. Backup Ring
17. Bolt
18. Cylinder
19. Retaining Lock Screw
20. Cylinder Screw
21. Retaining Ring Lock
22. Thrust Plate
23. Needle Bearing
24. Spacer
25. Torque Block
26. Roll Pin
27. Head Pin
28. Upper Cam
29. Orifice Tube
30. Orifice Ring
31. Metering Pin
32. "O" Ring
33. Cam Follower
34. Dowel Pin
35. Felt Strip
36. Rod Scraper
37. Rod Retainer
38. Snap Ring
39. Piston
40. Fork
41. Wheel Bearing Spacer
42. Axle
43. Axle Washer
44. Bushing
45. Actuator Bracket
46. Lubricator
47. [A] Washer
48. [A] "O" Ring
49. Nut - Wheel
50. Nut - Splash Skirt

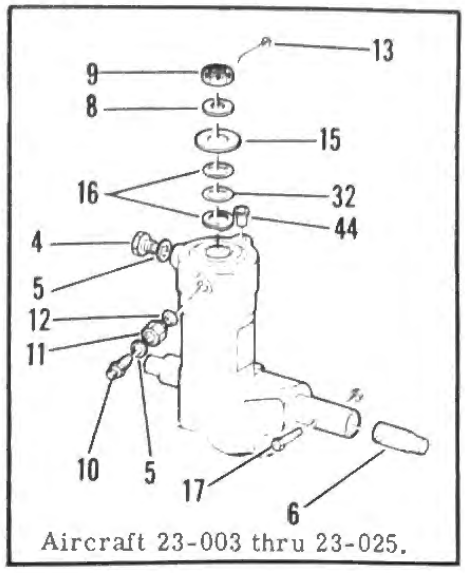

Aircraft 23-003 thru 23-025.

✸ Torque actuator bracket attach nuts 190 to 290 inch-pounds.

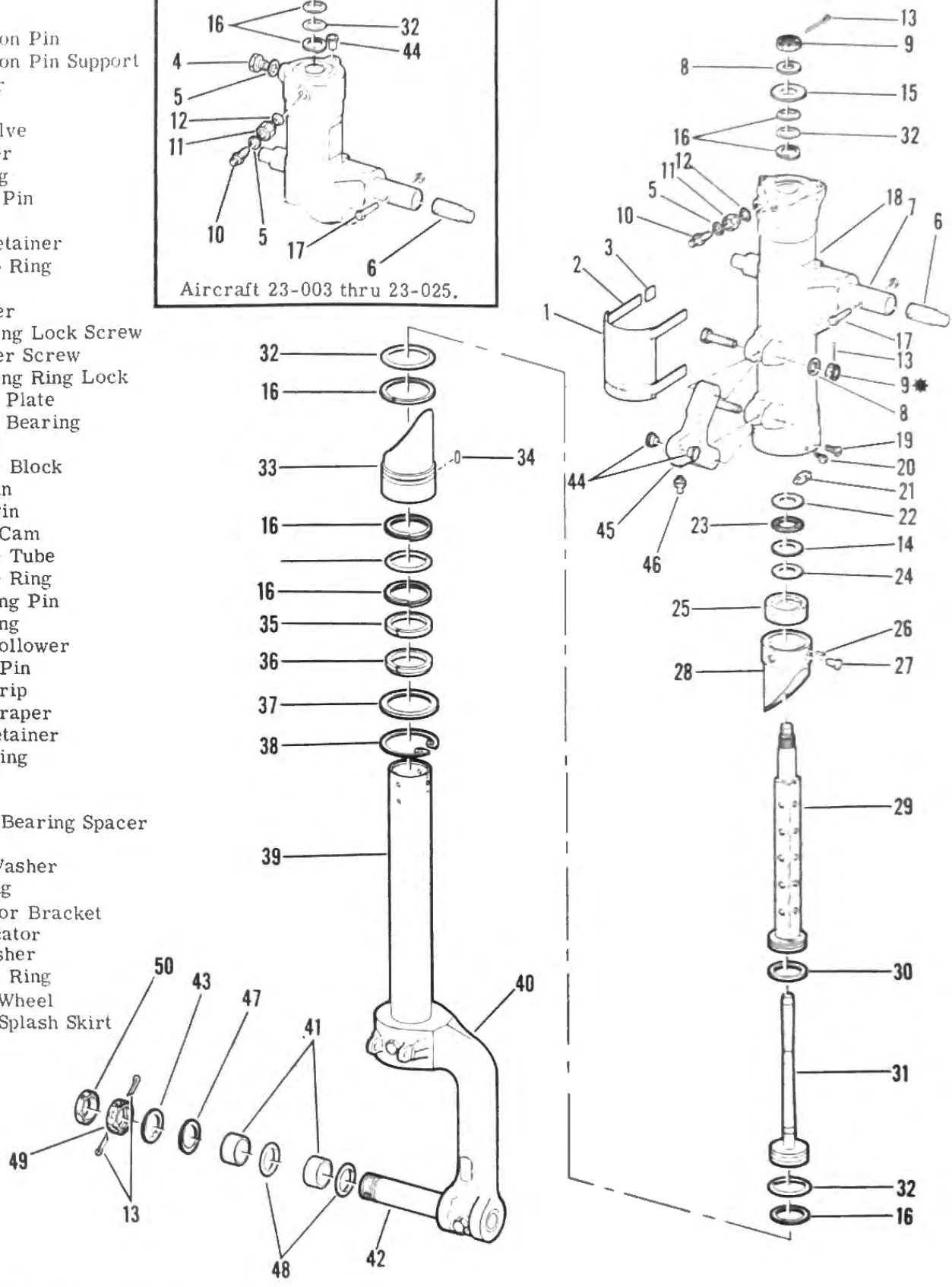

[A] Aircraft 23-030 thru 23-099 and Aircraft Modified by SK23-71

Figure 3-14. Nose Gear Shock Strut Assembly

CAUTION

Do not turn or twist piston until dowel pin (34) has been disengaged from cylinder.

Note

The head pin (27) is pressed into the torque block (25) and piston (39). The roll pin (26) is pressed into the upper cam (28). With the head pin removed, the upper cam can be slid off the upper end of the piston with the roll pin in place.

i. Push against lower end face of metering pin (31) to remove from piston (39) using caution to prevent damage to parts.
j. Remove nut and bolt from upper end of fork (40) and press out piston (39).
k. Remove nuts, washers, and bolts from trunnion pin support (7) to free trunnion pins (6).
l. Do not remove actuator bracket (45) unless replacement is required. Lubricator (46) and bushings (44) are pressed into place.
m. Clean metal parts with Stoddard solvent or equivalent.
n. Remove all fingerprints from machined surfaces not plated or painted using a suitable fingerprint neutralizer.

CAUTION

Discard all removed backup rings, felt strip, and O-rings. Assure that no solvent remains in internal cavities or surfaces.

o. Dry metal parts after cleaning with clean, dry compressed air.
p. Coat internal metal parts with MIL-H-5606 hydraulic fluid.
q. Wrap cleaned parts in lint-free cloth or clean waxed paper while awaiting repair and reassembly.

WARNING

Use cleaning solvents only in well ventilated areas. Avoid inhaling solvent vapors. Keep solvent and solvent containers away from spark or open flame.

r. When storing unplated machined surface parts more than a few hours, coat with MIL-C-11796 preservative. Remove preservative prior to assembly of parts.

NOSE GEAR SHOCK STRUT - WEAR TOLERANCE INSPECTION. (See figure 3-15.)
a. Screen drained hydraulic fluid for metal particles which may be used as an aid in determining trouble source.
b. Inspect all metal parts including welds, machined and forged parts for structural failure, nicks, burrs, cracks, corrosion, worn threads, and excessive wear.

Note

Perform a magnetic-type inspection on all ferrous parts. Perform an etching or fluorescent penetrant check on all aluminum parts. After ferrous parts inspection, demagnetize to remove all metal particles.

c. Check all friction surfaces of bushings and strut holes for out of round and taper using internal micrometer, plug gages, or similar equipment.
d. (Refer to figure 3-14.) Inspect OD and ID surfaces of piston (39) and cylinder (18) for galls, scratches, scoring, corrosion, and worn plating.

Note

Any parts which are damaged, cracked, excessively worn, scored, corroded, or do not meet inspection requirements or tolerances must be replaced.

e. Buff out minor scratches in upper cam (28), trunnion pins (6), cam follower (33), piston (39), and cylinder (18).

Note

Do not create low spots by excessive buffing or polishing. Use oil stone to remove the scratches and polish with crocus cloth. Check tolerances after polishing.

NOSE GEAR SHOCK STRUT - REASSEMBLY. (See figure 3-14.)
a. At each disassembly, replace all O-rings (32), backup rings (16), felt strip (35), orifice ring (30), and rod scraper (36).
b. Immerse all above items in MIL-H-5606 hydraulic fluid immediately prior to installation.
c. Replace head pin (27) and/or torque block (25) if loose.
d. Replace worn or damaged bushings (44) in pairs only.
e. Coat outside diameter and flange surfaces of new bushings with zinc chromate primer and press into actuator bracket while wet.
f. After installation, coat bushing faces with zinc chromate primer. Remove excess primer from lubricator hole and grease groove between bushings.
g. All O-ring grooves must be free from gouges, scratches, and burrs prior to O-ring installation.
h. Refinish all external painted surfaces with one coat of wash primer, one coat of zinc chromate primer, and one coat of aluminized lacquer.
i. Reassemble parts in reverse order of disassembly.

Note

Except for new parts, reassemble the same parts in the strut assembly from which they were removed.

j. Maintain original relationship between upper cam (28), roll pin (26), and roll pin slot in piston (39) during reassembly.
k. With O-ring and backup ring in place, push metering pin (31) until it is bottomed in piston (39).

CAUTION

Insert piston (39) straight into the cylinder (18) to prevent jamming of needle bearing (23) and thrust plates (22). Jamming will cause shimmy problems.

l. With piston (39) inside cylinder (18), extend piston (39) approximately 5 inches.

m. Align hole in cam follower (33) and cylinder (18) for dowel pin (34).
n. Press dowel pin (34) in place until it is flush with lower end face of cam follower (33).

Note

Before installing retaining ring lock (21), make sure snap ring (38) is in place over centerline of hole for retaining lock screw (19). Retaining ring lock cannot be assembled if snap ring is not set halfway or more into hole. If necessary, tap snap ring lightly to set into groove.

o. Install rod scraper (36), rod retainer (37), snap ring (38), retaining ring lock (21), retaining lock screw (19), and cylinder screw (20).
p. Secure retaining ring lock with retaining ring lock screw and lockwire to cylinder screw.
q. When installing nameplate, steel stamp new part to duplicate data on actual part being replaced.

OUTSIDE DIAMETER			
Nomenclature	Original O. D. (Inches)	Surface Finish (RMS)	Minimum O. D. (Inches)
Axle	1.4998 / 1.4988	63	1.498
Upper Cam	2.997 / 2.995	32	2.991
Orifice Tube	* 1.218 / 1.217	32	* 1.216
Piston	2.498 / 2.496	16	2.495
Trunnion Pin	0.6245 / 0.6225	63	0.6215

	INSIDE DIAMETER			TOTAL CLEARANCE DIAMETER	
Nomenclature	Original Hole Size I. D. (In.)	Surface Finish (RMS)	Maximum Hole Size I. D. (In.)	Original Inches	Maximum Wear (In.)
Cylinder	3.002 / 3.000	63	3.006	0.007 / 0.003	0.015
Torque Block	* 1.221 / 1.220	32	* 1.223	* 0.004 / 0.002	* 0.007
Cam Follower	2.502 / 2.500	32	2.506	0.006 / 0.002	0.011
Bushing	0.4385 / 0.4375	100	0.441	0.0027 / 0.0008	0.008

* At bearing surface of square formed parts (not diameter)

Figure 3-15. Nose Gear Shock Strut - Wear Tolerance

r. After complete reassembly of strut, except for air valve (10) and [A] fill plug (4), fully compress piston.
s. Place strut in vertical position and fill with clean MIL-H-5606 hydraulic fluid through air valve port until overflow exists. Pour fluid slowly to avoid foaming and accumulation of air pockets.
t. After servicing, install packing (12), reducer (11), gasket (5), and air valve (10) and torque to 350 inch-pounds.
u. [A] Install fill plug (4) with gasket and secure.
v. Install nose wheel steering actuator. (Refer to NOSE WHEEL STEERING ACTUATOR - REASSEMBLY, this section.)

NOSE GEAR SHOCK STRUT - FUNCTIONAL TEST.
a. Place completely assembled and fully serviced strut in either vertical or horizontal position.
b. With piston (39) fully extended, inflate strut to 39 psi with dry compressed air or nitrogen.
c. Observe strut for a 1-hour period, during which time there shall be no leakage.
d. After completion of test, release all air from strut through air valve by removing the cap and depressing the valve pin.
e. After air pressure is released, replace cap on air valve (10).
f. Install nose gear shock strut on aircraft.
g. Refer to Section I for servicing instructions.

NOSE GEAR SHOCK STRUT - INSTALLATION. (See figure 3-12.)

Note

Prior to installation of nose gear shock strut, inspect trunnion pins and bearings for general condition. Trunnion pins and/or bearings should be replaced if ID of bearing exceeds .6245 (+.0005/-.0000) and OD of trunnion pin exceeds .6240 (+.0005/-.0000).

a. Position strut in aircraft and, using punch inserted into trunnion slot, position trunnion pins into bearing plates (3).
b. Reinstall bolt (17, figure 3-14) through trunnion and trunnion pin and secure.
c. Reconnect electrical plug and replace wiring clamps.
d. Reinstall actuator and secure to strut.
e. Remove caps and reconnect hydraulic lines. Bleed the hydraulic system. (Refer to BLEEDING HYDRAULIC SYSTEM, this section.)
f. Install door link (8) and secure with attaching parts.

NOSE GEAR ACTUATOR. (See figure 3-16.) The nose gear is retracted and extended by an actuator which is attached to the shock strut and to the fuselage structure. A spring load built into the actuator drives a sleeve arrangement which entraps 10 steel balls engaging a notch in the piston rod to cause a positive mechanical locking action when the nose gear is in the down position. An integral switch in the actuator transmits a gear down and locked indication to the position indicator when the sleeve has extended over the locking arrangement. To retract the gear, hydraulic pressure in excess of 250 pounds is required to retract the sleeve assembly against the drive spring and release the downlock mechanism to permit gear retraction.

NOSE GEAR ACTUATOR - REMOVAL. (See figure 3-12.)
a. Place the aircraft on jacks.
b. Depressurize the hydraulic system. Refer to HYDRAULIC SYSTEM, this section. Disconnect aircraft batteries.
c. Remove nose compartment doors and electronic equipment from rack.
d. Remove clamp securing shuttle valve (15) to actuator. Disconnect and remove tube (16) and elbow from actuator. Cap or plug all exposed hydraulic fittings.
e. Remove safety wire and switch (13) from actuator.
f. Remove clamp securing actuator boot (18) to actuator.

Note

Remove actuator through the nose compartment.

g. Remove attaching parts (upper and lower end of actuator) and actuator from the aircraft.

NOSE GEAR ACTUATOR - DISASSEMBLY. (See figure 3-16.) During disassembly, tag and keep all parts together for reassembly into the same unit.
a. Do not remove nameplate (18) unless it is damaged.

WARNING

Use special precaution when unscrewing cylinder assembly (25) from housing (9) to prevent either part from springing out of control. Otherwise, bodily injury may result.

b. Remove lock screw (13) while taking care to control the [A] 195 ([B] 161) pound spring load on inside housing (9).
c. Slowly unscrew cylinder assembly (25) and remove from housing (9).

[A] Aircraft 23-003 thru 23-025.

[B] Aircraft 23-026 thru 23-099.

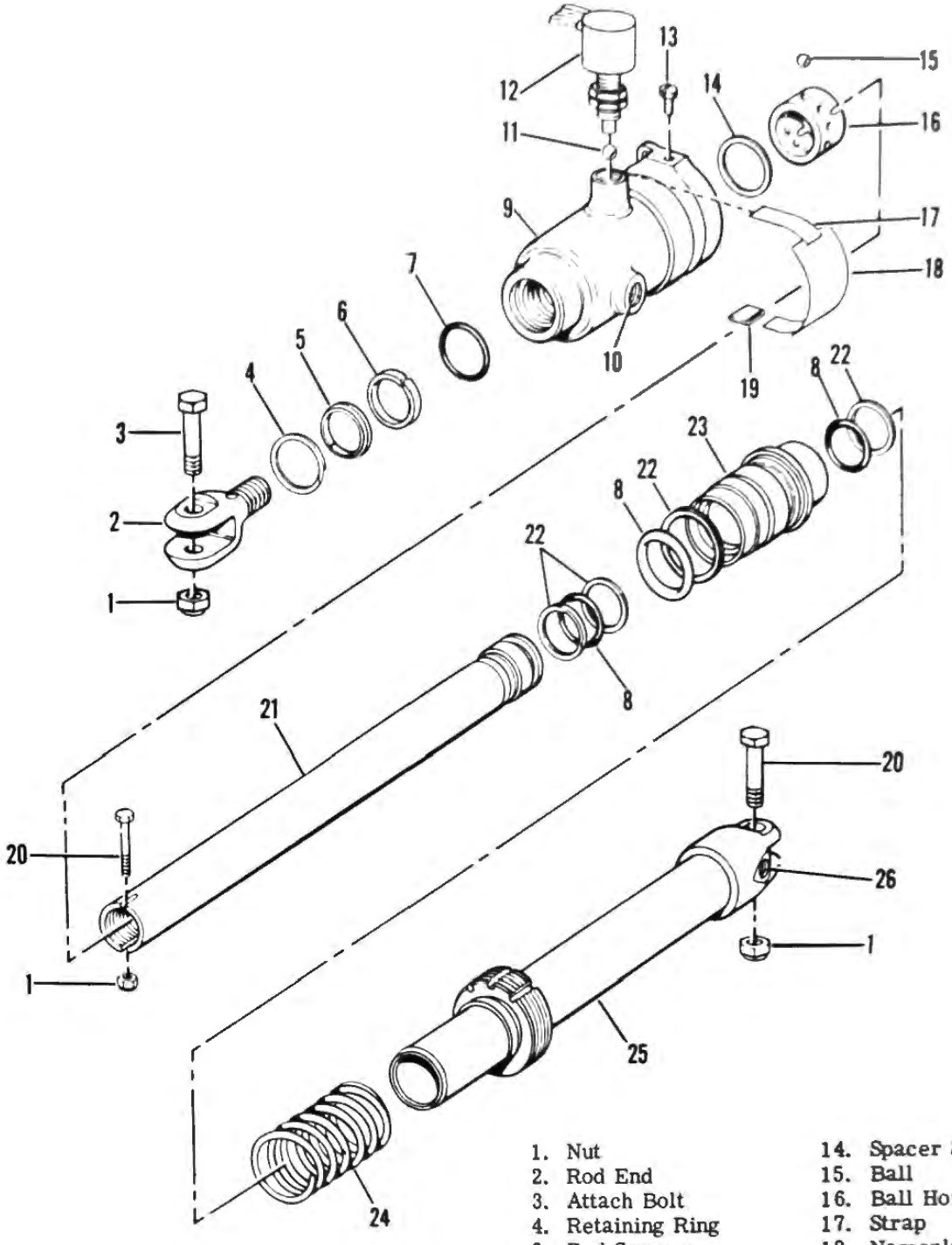

1. Nut
2. Rod End
3. Attach Bolt
4. Retaining Ring
5. Rod Scraper
6. Felt Strip
7. D-Ring
8. O-Ring
9. Housing
10. Extend Port
11. Switch Ball
12. Downlock Switch
13. Lock Screw
14. Spacer Shim
15. Ball
16. Ball Housing
17. Strap
18. Nameplate
19. Seal
20. Bolt
21. Piston
22. Backup Ring
23. Plunger
24. Spring
25. Cylinder Assembly
26. Retract Port

Figure 3-16. Nose Gear Actuator Assembly

d. Remove nuts and bolts attached to rod end.
e. Remove rod end and slide piston (21) with attached parts out of housing (9).

Note

Retrieve the balls (15) which will fall free as piston (21) is removed.

f. Measure and record thickness of spacer shim (14).
g. Clean metal parts with Stoddard solvent or equivalent.
h. Remove all fingerprints from machined surfaces not plated or painted using a suitable fingerprint neutralizer.

CAUTION

Discard all removed backup rings, felt strip, and O-rings. Assure that no solvent remains in internal cavities or surfaces.

i. Dry metal parts after cleaning with clean, dry compressed air.
j. Coat internal surfaces with MIL-H-5606 hydraulic fluid.
k. Wrap cleaned parts in lint-free cloth or clean waxed paper while awaiting repair and reassembly.

WARNING

Use cleaning solvents only in well-ventilated areas. Avoid inhaling solvent vapors. Keep solvent and solvent containers away from spark or open flame.

l. When storing unplated machine surfaced parts more than a few hours, coat with MIL-C-11796 preservative. Remove preservative prior to reassembly of parts.

NOSE GEAR ACTUATOR - WEAR TOLERANCE INSPECTION. (See figure 3-17.)
a. Screen drained hydraulic fluid for metal particles which may be used as an aid in determining trouble source.
b. Inspect all metal parts including welds, machined and forged parts for structural failure, nicks, burrs, cracks, corrosion, worn threads, and excessive wear.

Note

Perform a magnetic-type inspection on all ferrous parts. Perform an etching or fluorescent penetrant check on all aluminum parts. After ferrous parts inspection, demagnetize to remove all metal particles.

c. Inspect OD and ID surfaces of cylinder assembly (25), OD surfaces of piston (21), and ID surfaces of housing (9) for galls, scratches, scoring, corrosion, and worn plating.
d. Check to ensure the spring (24) height is at least 2 inches when supporting a [A] 195 ([B] 161) pound load.

Note

Any parts which are damaged, cracked, excessively worn, scored, corroded, or do not meet inspection requirements or tolerances must be replaced.

e. Buff out minor scratches in cylinder assembly (25), plunger (23), ball housing (16), piston (21), and housing (9).

Note

Do not create low spots by excessive buffing or polishing. Use oil stone to remove scratches and polish with crocus cloth. Check tolerances after polishing.

NOSE GEAR ACTUATOR - REASSEMBLY. (See figure 3-16.)
a. Check to ensure spring (24) height is at least 2 inches while supporting a [A] 195 ([B] 161) pound load.
b. At each assembly, replace all O-rings (8), backup rings (22), felt strip (6), and rod scraper (5).
c. Immerse all above items in MIL-H-5606 hydraulic fluid immediately prior to installation.
d. All O-ring grooves must be free from gouges, scratches, and burrs prior to O-ring installation.
e. Reassemble parts in reverse order of disassembly.

Note

Except for new parts, reassemble the same parts in the actuator assembly from which they were removed.

f. Prior to reassembly of parts within housing (9), place ball housing (16) and spacer shim (14) on piston (21) and slide piston through housing.

Note

Check that retract port (26) and extend port (10) are in the same plane and facing the same way to within 5°. To obtain correct positioning, the center groove in the threaded portions of cylinder assembly (25) must be lined up with hole in housing (9) for lock screw (13).

g. Add to or remove laminations on spacer shim (14) or remove spacer shim completely as required to obtain firm seating of spacer shim and ball housing (16) inside of housing (9).

[A] Aircraft 23-003 thru 23-025.

[B] Aircraft 23-026 thru 23-099.

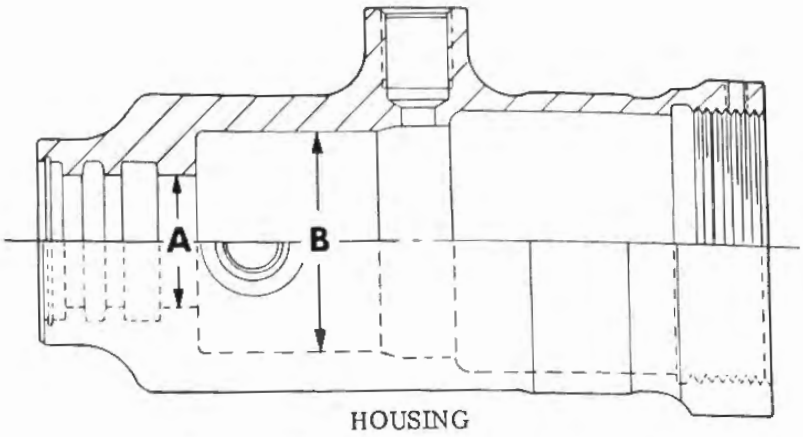

HOUSING

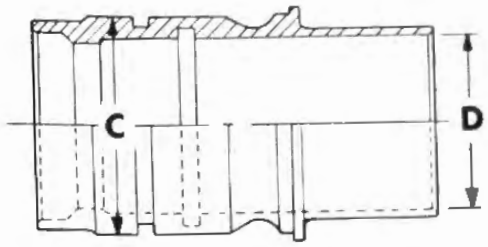

PLUNGER

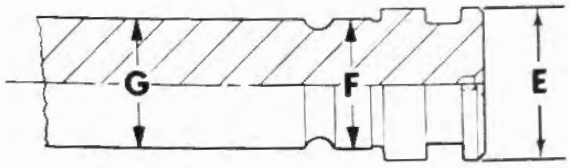

PISTON

A. 1.125 - 1.127, Surface Finish (RMS 32)
B. 1.875 - 1.877, Surface Finish (RMS 32)
C. 1.871 - 1.873, Surface Finish (RMS 32)
D. 1.501 - 1.503, Surface Finish (RMS 32)
E. 1.308 - 1.310, Surface Finish (RMS 32)
F. 1.122 - 1.124, Surface Finish (RMS 32)
G. 1.122 - 1.124, Surface Finish (RMS 16)

OUTSIDE DIAMETER			
Nomenclature	Original O. D. (Inches)	Surface Finish (RMS)	Minimum O. D. (Inches)
Attach Bolt	$\frac{0.4367}{0.4358}$	32	0.436
Cylinder Assembly	$\frac{1.499}{1.497}$	16	1.496
Plunger	$\frac{1.873}{1.871}$	32	1.869
Piston	$\frac{1.310}{1.308}$	32	1.306
Piston	$\frac{1.124}{1.122}$	32	1.120
Piston	$\frac{1.124}{1.122}$	16	1.121

INSIDE DIAMETER				TOTAL CLEARANCE DIAMETER	
Nomenclature	Original Hole Size I. D. (In.)	Surface Finish (RMS)	Maximum Hole Size I. D. (In.)	Original Inches	Maximum Wear (In.)
Plunger	$\frac{1.503}{1.501}$	32	1.505	$\frac{0.006}{0.002}$	0.009
Ball Housing	$\frac{1.128}{1.126}$	125	1.130	$\frac{0.006}{0.002}$	0.010
Cylinder Assembly	$\frac{1.314}{1.312}$	16	1.316	$\frac{0.006}{0.002}$	0.010
Housing	$\frac{1.877}{1.875}$	32	1.880	$\frac{0.006}{0.002}$	0.011
Housing	$\frac{1.127}{1.125}$	32	1.131	$\frac{0.005}{0.001}$	0.010

Aircraft 23-003 thru 23-025
Figure 3-17. Nose Gear Actuator - Wear Tolerance (Sheet 1 of 2)

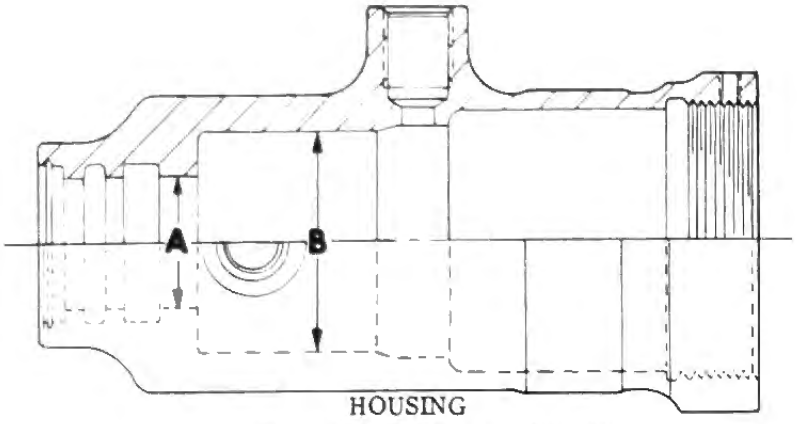

HOUSING

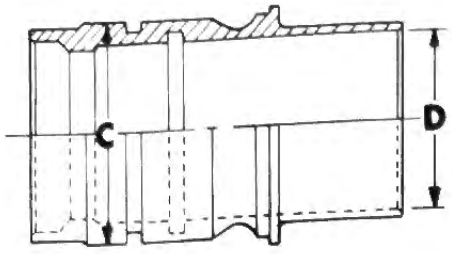

PLUNGER

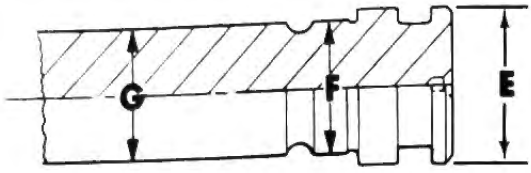

PISTON

A. 1.125 - 1.127, Surface Finish (RMS 32)
B. 1.992 - 1.994, Surface Finish (RMS 32)
C. 1.988 - 1.990, Surface Finish (RMS 32)
D. 1.629 - 1.631, Surface Finish (RMS 32)
E. 1.432 - 1.434, Surface Finish (RMS 32)
F. 1.122 - 1.124, Surface Finish (RMS 32)
G. 1.122 - 1.124, Surface Finish (RMS 16)

OUTSIDE DIAMETER			
Nomenclature	Original O. D. (Inches)	Surface Finish (RMS)	Minimum O. D. (Inches)
Attach Bolt	$\frac{0.4367}{0.4358}$	32	0.436
Cylinder Assembly	$\frac{1.627}{1.625}$	16	1.624
Plunger	$\frac{1.990}{1.988}$	32	1.986
Piston	$\frac{1.434}{1.432}$	32	1.430
Piston	$\frac{1.124}{1.122}$	32	1.220
Piston	$\frac{1.124}{1.122}$	16	1.121

INSIDE DIAMETER				TOTAL CLEARANCE DIAMETER	
Nomenclature	Original Hole Size I. D. (In.)	Surface Finish (RMS)	Maximum Hole Size I. D. (In.)	Original Inches	Maximum Wear (In.)
Plunger	$\frac{1.631}{1.629}$	32	1.633	$\frac{0.006}{0.002}$	0.009
Ball Housing	$\frac{1.128}{1.126}$	125	1.130	$\frac{0.006}{0.002}$	0.010
Cylinder Assembly	$\frac{1.438}{1.436}$	16	1.440	$\frac{0.006}{0.002}$	0.010
Housing	$\frac{1.994}{1.992}$	32	1.997	$\frac{0.006}{0.002}$	0.011
Housing	$\frac{1.127}{1.125}$	32	1.131	$\frac{0.005}{0.001}$	0.010

Aircraft 23-026 thru 23-099

Figure 3-17. Nose Gear Actuator - Wear Tolerance (Sheet 2 of 2)

h. Assemble the 10 balls (15) in ball housing (16) and slide plunger (23) over them to hold their relative positions. Place spring (24) over cylinder (25).
i. Screw cylinder assembly (25) into place until its inner end face firmly clamps ball housing (16) and spacer shim (14) against housing (9).

WARNING

Take care to control the spring load inside housing when screwing cylinder assembly into place.

j. Install lockscrew (14) and lockwire at place provided on housing (9). Install rod end (2).
k. When installing nameplate, steel stamp new part to duplicate data on actual part being replaced.
l. Refinish all external painted surfaces with one coat of wash primer, one coat of zinc chromate primer, and one coat of aluminized lacquer.

NOSE GEAR ACTUATOR - FUNCTIONAL TEST. (See figure 3-16.)
a. After complete assembly, fill actuator through extend port (10) with clean MIL-H-5606 hydraulic fluid.
b. Bleed all air from actuator.
c. Place actuator in a horizontal fully extended position.
d. Connect a hydraulic test bench, capable of at least 3000 psi, to extend port (10) with retract port (26) open.
e. Pressurize to [A] 2500 ([B] 2250) psi for 2 minutes, then drop pressure to 5 psi for an additional 2 minutes. There shall be no leakage from the open retract port during this period.
f. Disconnect extend port and connect hydraulic test bench to retract port (26) with extend port (10) open.
g. Bleed all air from actuator.
h. Pressurize to [A] 3000 ([B] 2250) psi for 2 minutes, then drop pressure to 5 psi for an additional 2 minutes. There shall be no leakage from the open extend port during this period.

NOSE GEAR ACTUATOR - INSTALLATION. (See figure 3-12.)
a. Reinstall actuator in aircraft and secure with attaching parts.
b. Secure boot seal to actuator with clamp.
c. Reinstall switch (13) on actuator and adjust. Refer to NOSE GEAR ACTUATOR DOWN AND LOCKED SWITCH - ADJUSTMENT, this section.
d. Secure shuttle valve (15) to actuator and reconnect elbow and tube (16).

Note

While bleeding hydraulic system, check for proper operation of actuator.

e. Reconnect aircraft batteries and bleed hydraulic system. Refer to BLEEDING HYDRAULIC SYSTEM, this section.
f. Reinstall electronic equipment and nose compartment doors.

NOSE GEAR ACTUATOR DOWN AND LOCKED SWITCH - ADJUSTMENT. (See figure 3-12.)
a. Place aircraft on jacks.
b. Pressurize hydraulic system and extend gear to down and locked.
c. Attach an ohmmeter to No. 1 and 3 switch wires.
d. Screw microswitch into actuator until ohmmeter actuation occurs, then back off one complete turn.
e. Secure outer jamnut and lockwire per double twist method.

NOSE GEAR UPLATCH MECHANISM. (See figure 3-18.) The nose gear uplatch mechanism retains the gear in the up and locked position. The mechanism consists of a torque tube mounted uplatch hook, a spring-loaded uplatch actuator, and an adjustable uplatch safety cam with [C] roller. The spring tension of the actuator retains the uplatch hook in the locked position. As the nose gear is retracted, the uplatch spacer contacts the ramp of the uplatch hook, compressing the spring and, as it passes by, the hook and spacer engage. When the nose gear is extended, hydraulic pressure is applied to the uplatch cylinder. The cylinder pressure overcomes the spring tension and rotates the uplatch hook, releasing the nose gear for extension. [C] The uplatch safety cam sweeps the spacer from the hook. An adjustable uplatch switch is bracket-mounted on the uplatch hook.

NOSE GEAR UPLATCH ACTUATOR - REMOVAL. (See figure 3-18.)
a. Place the aircraft on jacks.
b. Depressurize the hydraulic system. (Refer to HYDRAULIC SYSTEM, this section.)
c. Disconnect hydraulic line (5) from actuator (6). Cap and plug exposed hydraulic fittings.
d. Remove attaching parts and actuator from aircraft.

NOSE GEAR UPLATCH ACTUATOR - DISASSEMBLY. (See figure 3-19.)
a. Cut lockwire and remove key lock (2). Loosen and remove rod end (1) and locknut (3) from piston rod (8).

CAUTION

Use extreme care when removing lock spring (5) and plug (6) from barrel (11). The actuator is spring-loaded to 40 pounds in the retracted position.

[A] Aircraft 23-003 thru 23-009.
[B] Aircraft 23-010 thru 23-099.
[C] Aircraft 23-060 thru 23-099 and aircraft modified by SK23-129.

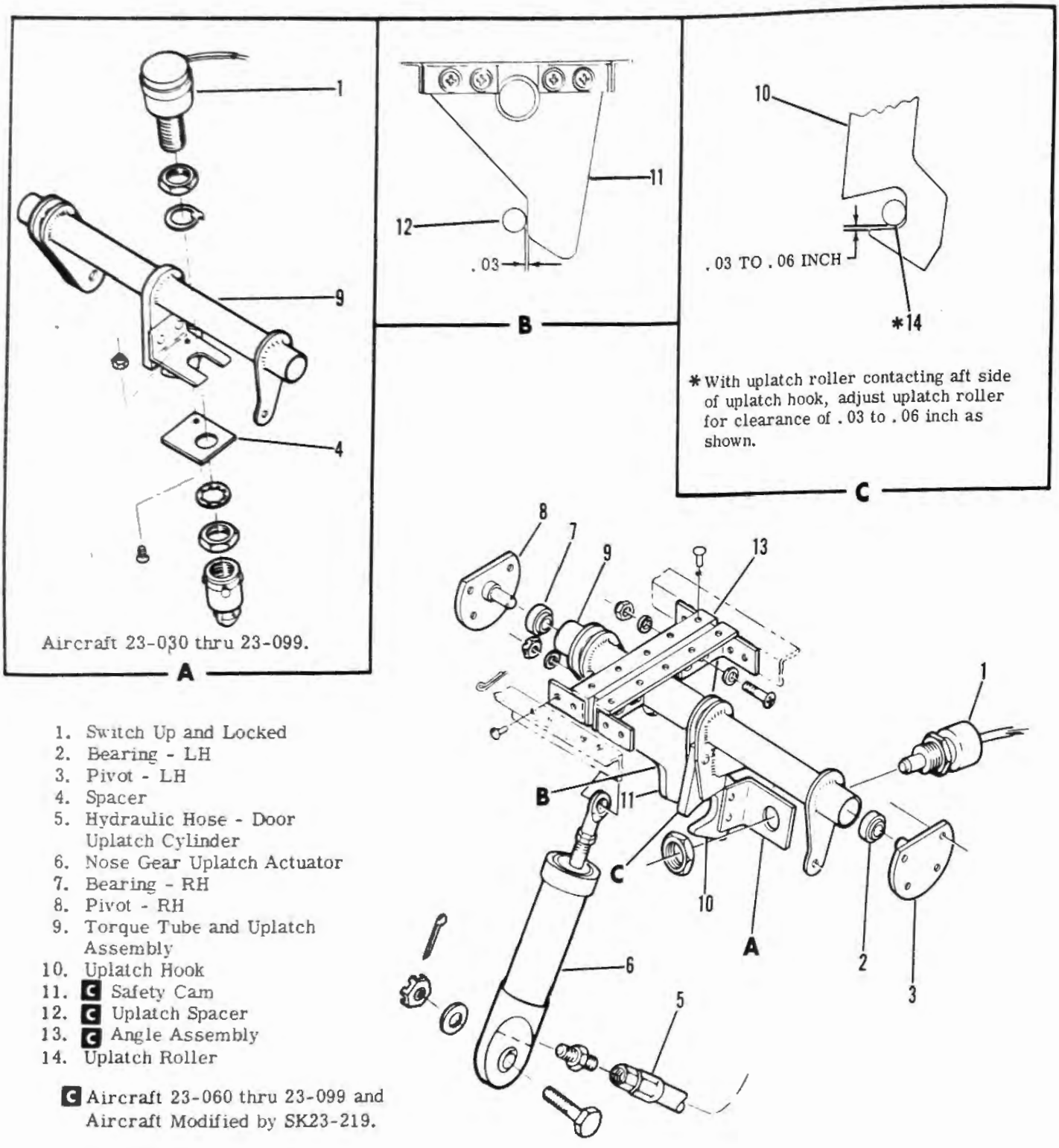

1. Switch Up and Locked
2. Bearing - LH
3. Pivot - LH
4. Spacer
5. Hydraulic Hose - Door Uplatch Cylinder
6. Nose Gear Uplatch Actuator
7. Bearing - RH
8. Pivot - RH
9. Torque Tube and Uplatch Assembly
10. Uplatch Hook
11. C Safety Cam
12. C Uplatch Spacer
13. C Angle Assembly
14. Uplatch Roller

C Aircraft 23-060 thru 23-099 and Aircraft Modified by SK23-219.

Figure 3-18. Nose Gear Uplatch Installation

b. Press plug (6) inboard to allow removal of lock spring (5). Remove lock spring (5) and slowly release plug (6).
c. When spring tension is released, remove plug (6) and spring (7) from barrel (11).
d. Remove piston rod (8) from barrel (11). Remove O-ring and backup rings from piston rod (8). Remove felt wiper (4) from plug (6).
e. Clean all parts with Stoddard solvent or equivalent. Dry parts with clean, dry compressed air.
f. Inspect all parts for nicks, scratches, or excessive wear. Replace defective parts.
g. Buff out minor scratches using an oil stone and polish with crocus cloth.

NOSE GEAR UPLATCH ACTUATOR - REASSEMBLY. (See figure 3-19.)
a. Immerse O-ring and backup rings in MIL-H-5606 hydraulic fluid. Assemble O-ring (10) and backup rings (9) on piston rod (8) and felt wiper (4) in plug (6).
b. Position piston rod (8) and spring (7) in barrel (11). Install plug (6) on piston rod (8) and push in, compressing spring sufficiently to allow installation of lock spring (5).
c. Install lock spring (5) and slowly release plug (6) until firmly seated against lock spring (5).
d. Install key lock (2), locknut (3), and rod end (1) on piston rod (8).
e. Connect actuator to a hydraulic test bench and pressure check at 2250 psi for 3 minutes. Leakage rate should not exceed one drop in the 3-minute period.
f. While actuator is in the extended position, adjust for 9.34 (±.015)-inch distance between centerlines of rod end and actuator bearing.
g. Remove hydraulic pressure and check retracted length of 8.44 (±0.045) inches and safetywire.
h. Install actuator in aircraft and secure with attaching parts. Check for proper rigging. (Refer to RIGGING NOSE GEAR UPLATCH, this section.)

RIGGING NOSE GEAR UPLATCH. (See figure 3-18.)
a. Place the aircraft on jacks.
b. Disconnect linkage from nose gear doors.
c. Retract nose gear.
d. Adjust uplatch roller to clear uplatch hook as shown in Detail "C."
e. [A] Adjust uplatch switch to maintain a clearance of 0.10 to 0.13 inch between switch and uplatch roller attach bolt as shown in figure 3-20.
f. Attach an ohmmeter across uplatch switch leads and adjust inner jamnut until switch actuates plus one additional turn.
f. Secure outer jamnut and lockwire per double twist method.

[A] Aircraft 23-030 thru 23-099.

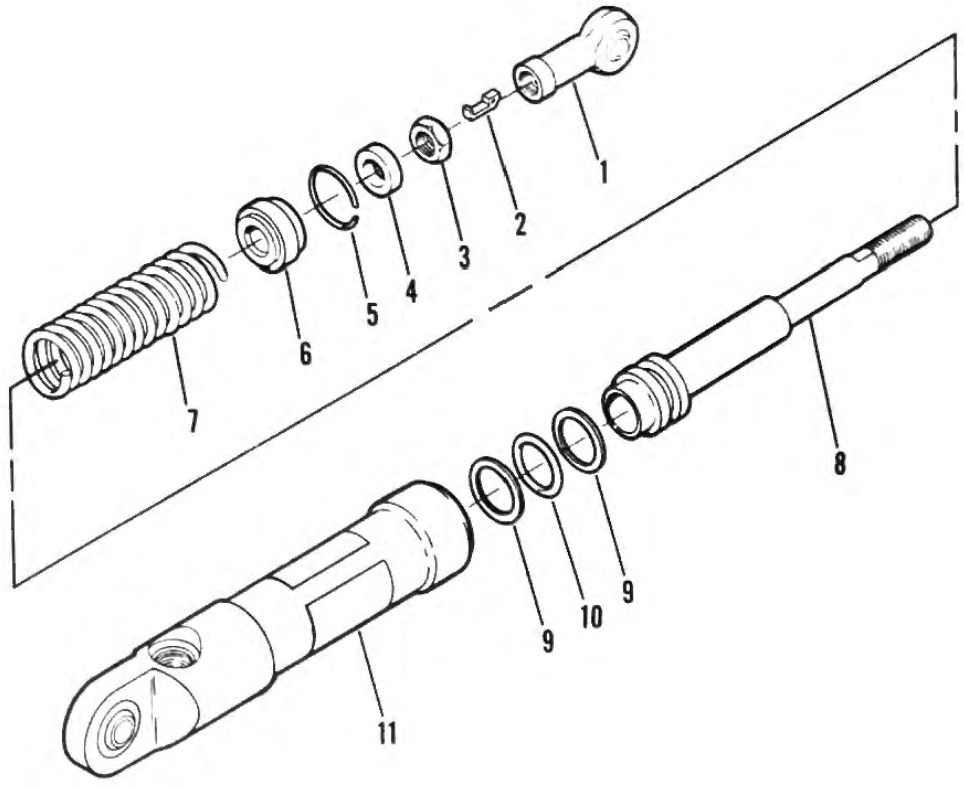

1. Rod End
2. Key Lock
3. Locknut
4. Felt Wiper
5. Lock Spring
6. Plug
7. Spring
8. Piston Rod
9. Backup Ring
10. O-Ring
11. Barrel

Figure 3-19. Nose Gear Uplatch Actuator Assembly

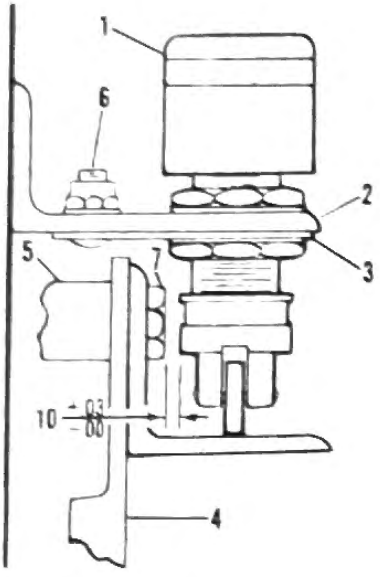

1. Uplatch Switch
2. Bracket
3. Spacer
4. Uplatch Roller Bracket
5. Uplatch Roller
6. Adjust Screw
7. Roller Attach Bolt

Aircraft 23-030 thru 23-099.

Figure 3-20. Nose Gear Uplatch Switch

h. A Adjust safety cam to maintain 0.03-inch clearance between cam and uplatch spacer with nose gear retracted. Loosen screws through upper portion of cam for adjustment purposes.

Note

The doors should drop slightly as an indication of the uplatch roller making positive contact with the uplatch hook.

i. Extend nose gear and attach linkage to doors.
j. Adjust left and right nose gear pushrods as required to bring doors into contour with the fuselage.

NOSE GEAR DOORS. The nose gear is enclosed by two hinge-mounted doors. The doors are opened and closed mechanically through linkage connected to the nose gear. Adjustable pushrods are provided to bring the doors into contour with the fuselage when the gear is retracted.

RIGGING NOSE GEAR DOOR LINKAGE. (See figure 3-21.)
a. Check adjustment of strut pushrod for 10.40 inches.
b. Check adjustment of connecting link for 2.65 inches.
c. Check adjustment of left and right nose gear door pushrods for 11.08 inches.
d. Pressurize hydraulic system and retract nose gear.
e. After nose gear doors are closed, release hydraulic pressure.

NOSE WHEEL STEERING SYSTEM. (See Section IX for wiring diagram.) The nose wheel steering system is operable only when the aircraft is on the ground and one of the WHEEL MASTER or PRI STEER switches are depressed. Steering travel is 6° to 10° either side of neutral with the PRI STEER switches released. With a PRI STEER switch depressed, the nose wheel is steerable through 40° to 50° either side of neutral for low speed taxiing and parking purposes. System components consist of an electrically powered steering actuator and followup, mounted on top of the nose gear strut; a steering computer amplifier, mounted in the left side of the nose section; a followup, mechanically connected to the rudder pedals; a steering relay, located in the nose section; a WHEEL MASTER switch on each control wheel; and a PRI STEER switch, located on the pilot's and copilot's subpanels. System power is 28-volt DC for the actuator servo motor and 115-volt AC for the position sensing system. When the nose gear steering is not being used, the steering actuator acts as a shimmy damper.
a. Operation. (Refer to Section IX for wiring diagram.) Rudder pedal movement drives the position synchro motor which applies a voltage displacement signal to the input of the computer amplifier. The computer amplifier applies a signal to a "clockwise" or "counterclockwise" magnetic particle clutch in the steering actuator of a magnitude corresponding to the degree of rudder pedal displacement. The signal application causes the magnetic clutch particles to solidify and engage the clutch with the DC motor. The clutch output torque drives the actuator gear train and positions the nose wheel to the selected position. Two additional signals are also applied to the input of the computer amplifier: a followup signal from the actuator followup and a DC velocity generator feedback signal. The actuator followup signal and the rudder pedal followup signal are algebraically summed in the computer amplifier with the actuator followup signal tending to incrementally cancel the rudder pedal followup signal. The followup signal eventually cancels the rudder pedal followup signal when the nose gear has attained its selected position.

Note

For additional information relative to the nose wheel steering system, refer to the Nose Wheel Steering Installation Manual.

REPLACEMENT AND ADJUSTMENT OF RUDDER PEDAL FOLLOWUP. (See figure 3-22.)
a. Place the aircraft nose wheel on a protractor or equivalent means of measuring travel in degrees.
b. Turn off aircraft battery switch.

Note

The rudder pedal followup is located forward of the copilot's rudder pedals under the floorboards and the computer amplifier is located in the aircraft nose compartment.

A Aircraft 23-060 thru 23-099 and aircraft modified by SK23-129.

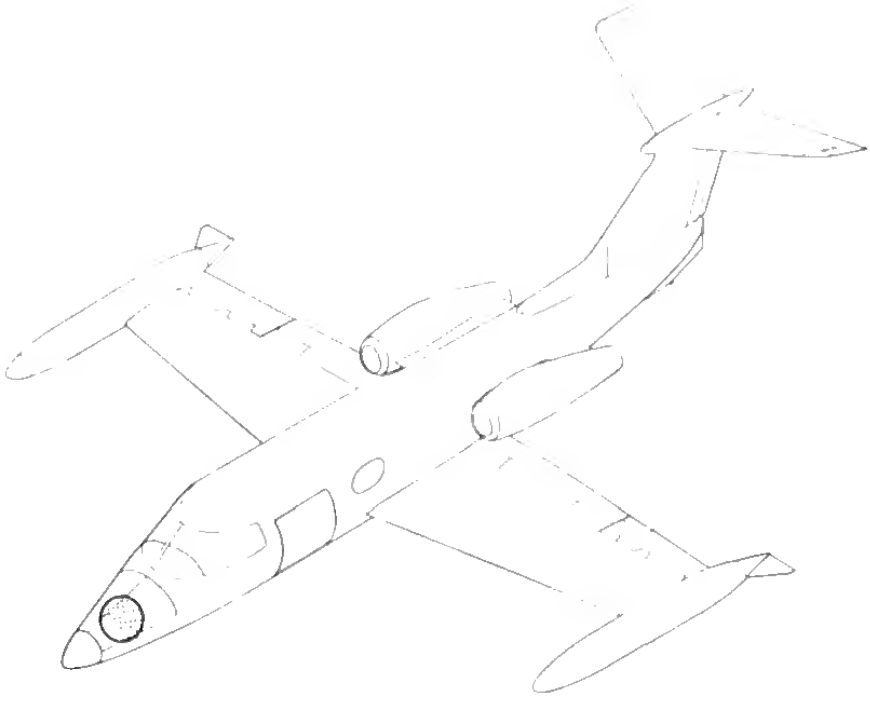

1. Nose Gear Shock Strut
2. Channel Assembly
3. Washer
4. Screw
5. Pivot
6. Push Rod - Left Nose Door
7. Push Rod - Right Nose Door
8. Torque Tube Assembly
9. Connecting Link
10. Strut Push Rod

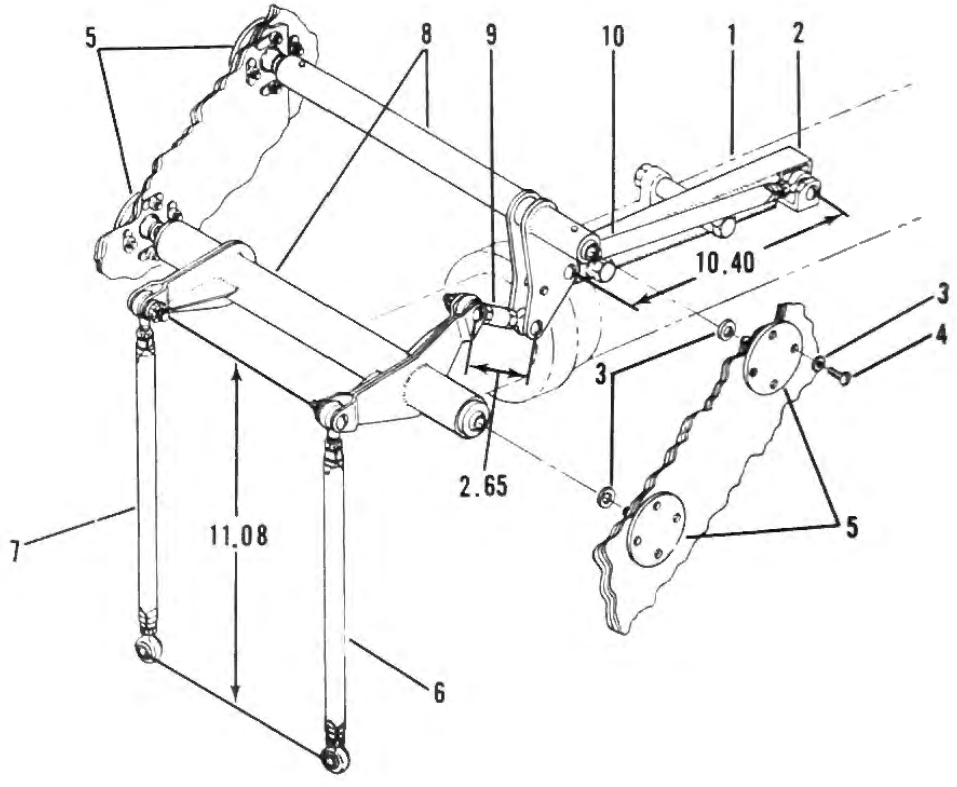

Figure 3-21. Nose Gear Door Linkage - Gear Retracted

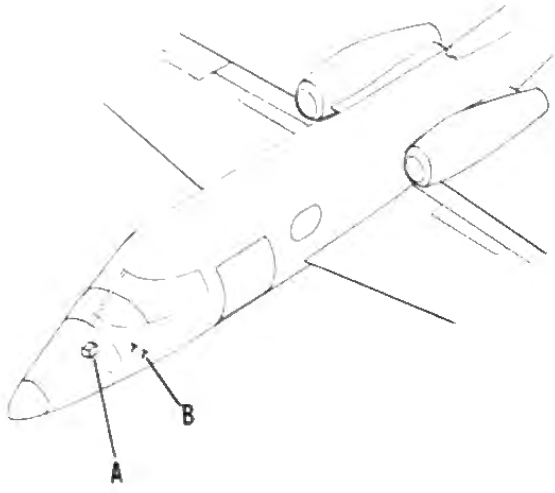

1. Steering Computer Amplifier
2. Balance Potentiometer
3. Follow Up Potentiometer
4. Pedal Potentiometer
5. Velocity Potentiometer
6. Electrical Connector
7. Rudder Pedal Synchro
8. Bracket
9. Link
10. Arm
11. Bracket
12. Clip
13. Stall Warning and Nose Steering Computer
14. Cover

(A)

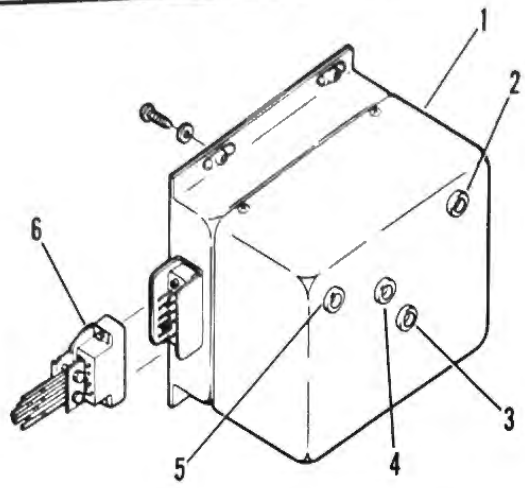

Aircraft 23-003 thru 23-011

Potentiometers are located inside computer case.

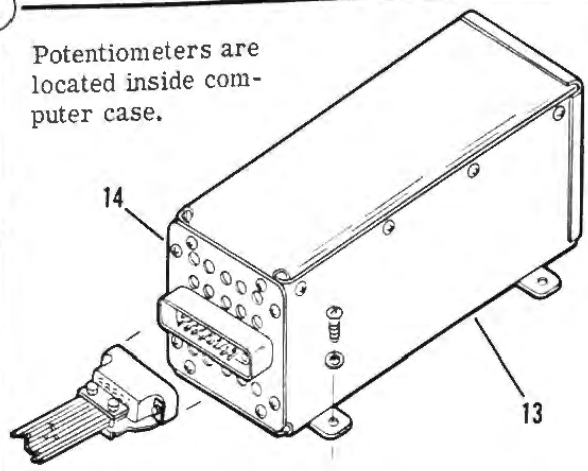

Aircraft 23-012 thru 23-099

(B)

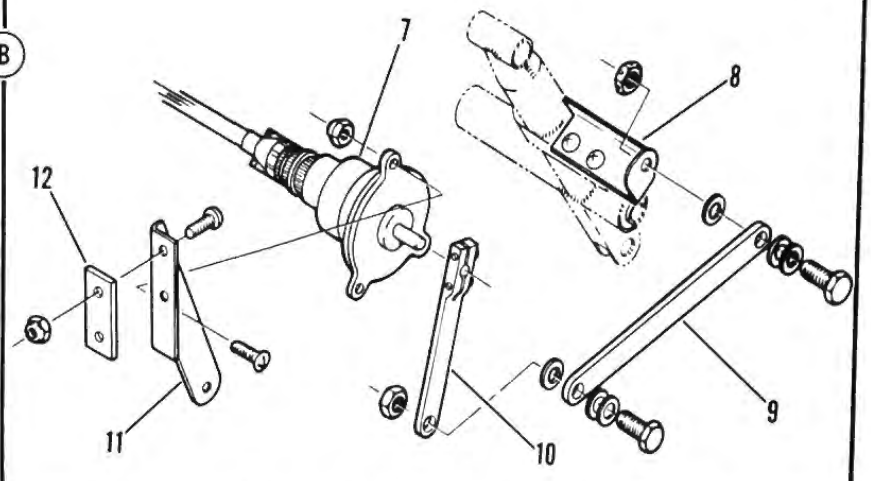

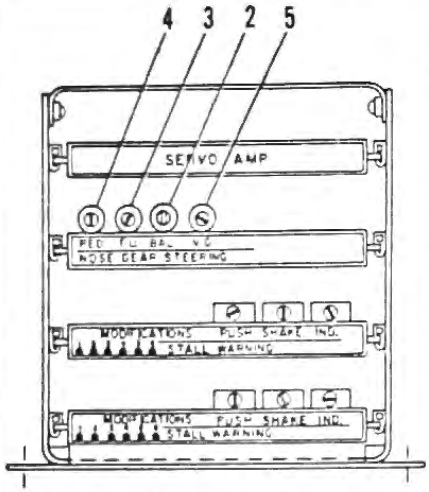

VIEW FROM END OPPOSITE PLUG WITH COVER REMOVED

Figure 3-22. Nose Steering Computer and Rudder Pedal Synchro Installation

c. Remove the floorboard immediately aft of the rudder pedals to gain access to the rudder bellcrank.
d. Position the rudder pedals to neutral and insert rigging pin through rigging pin hole in rudder bellcrank. This will hold rudder pedals in neutral during the followup installation.
e. Disconnect electrical plug from followup and remove attaching parts and arm from followup shaft. Remove attaching parts and followup from aircraft.
f. Align the detent dot on the followup shaft with the detent dot on the followup housing. This will set the followup in a zero (null) position.

Note

When installing followup, use extreme care not to move followup shaft.

g. Install followup and secure with attaching parts.
h. Rebalance the nose steering computer amplifier as follows:
1. Remove cover from nose steering computer amplifier (end opposite plug).
2. Using a small screwdriver, turn BAL potentiometer to the vertical position. In this position, the BAL potentiometer will be centered (null).
3. Reinstall cover on nose steering computer amplifier.
i. Install arm (10) on followup shaft. Do not secure arm to shaft at this time.
j. Connect electrical plug to the followup and turn on battery and primary inverter switches.

Note

When installing a new followup, the BAL potentiometer in the computer amplifier should never be used to align the nose wheel.

k. Depress either PRI STEER switch. If nose wheel travel (in either direction) is noted, the followup must be adjusted to center the nose wheel. With the nose wheel centered, secure arm (10) to followup shaft. Recheck nose wheel alignment.
l. Remove rigging pin from rudder bellcrank. Move the rudder pedals to apply right and then left rudder. The nose wheel should react by moving in a direction corresponding to rudder pedal position. If the nose wheel moves in the opposite direction of the rudder pedals, the followup shaft is turned 180° and step m should be performed.
m. Turn off battery and primary inverter switches and remove plug from followup. Loosen arm and rotate shaft 180° and repeat steps j through l. Retighten arm on shaft.
n. Turn battery and inverter switches off. Reinstall floorboards and nose compartment doors and remove aircraft from protractor.

NOSE WHEEL STEERING ACTUATOR - REMOVAL AND DISASSEMBLY. (See figure 3-23.) Nose wheel steering actuator removal is required for disassembly and replacement of nose gear shock strut components. During removal, tag and keep all parts together for reassembly.
a. [A] The actuator case is fastened to the strut internally by a gearbox stud (28). For access and removal of this stud, proceed as follows:

CAUTION

Do not damage lid upon removal from recessed position in case.

1. Remove lockwire and screws (14) from lid (1) and remove lid.
2. Remove cotter pin, nut and washer (27) and ball bearing from strut.

Note

The main drive gear is secured to the strut shaft with Loctite retaining compound. To aid in removal of the main drive gear, a main drive gear removal tool may be fabricated as shown in figure 3-23.

3. Screw main drive gear removal tool fully onto strut shaft. Strike the tool with a series of sharp blows until the main drive gear is loosened on the shaft.

Note

Assure that the shaft does not fall into the strut when the tool is removed. Otherwise, the strut will have to be disassembled to retrieve the shaft.

4. Unscrew main drive gear removal tool from the shaft assuring that the shaft does not fall into the strut.
5. Remove main drive gear, cluster gear, spacer, bearing races and needle bearing.
6. Inspect bearing races and needle bearing for damage caused by driving the shaft out of the main drive gear.
7. Remove gear box stud (28) from actuator case.

Note

Do not remove attach plugs (17), support (19), and bracket (16) from strut.

8. Remove actuator from strut by removing screws (6) from support (19) and bracket (16).

[A] Aircraft 23-003 thru 23-025.

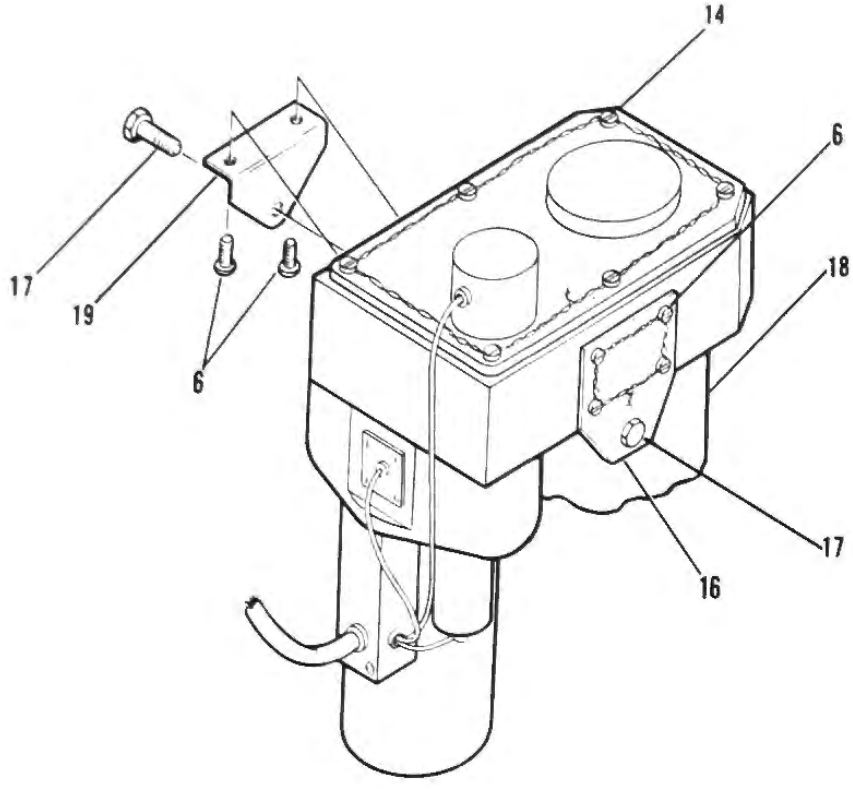

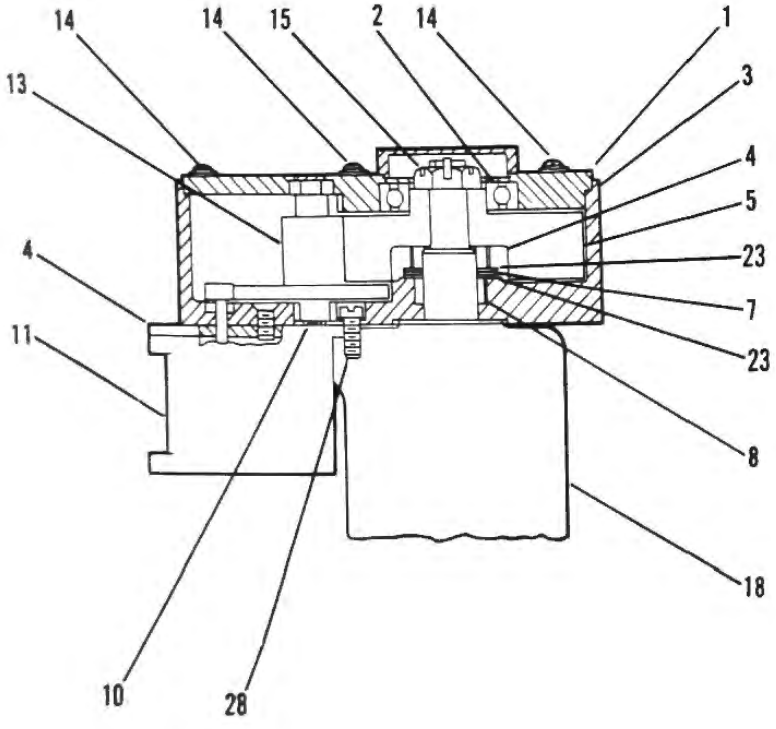

1. Lid
2. Ball Bearing
3. Case
4. Spacer
5. Main Drive Gear
6. Screw
7. Needle Bearing
8. Roller Bearing
9. Strut Screw
10. Plug
11. Servo Assembly
12. Gear - Followup
13. Cluster Gear
14. Screw
15. Nut
16. Bracket
17. Attach Plug
18. Nose Gear Strut
19. Support
20. Bushing
21. Setscrew
22. Washer
23. Bearing Race
24. Ring
25. Followup
26. Cotter Pin
27. Washer
28. Stud
29. Strut Shaft (Orifice Tube)
30. Peel Shim Washer

Aircraft 23-003 thru 23-025

Figure 3-23. Nose Wheel Steering Actuator Assembly (Sheet 1 of 2)

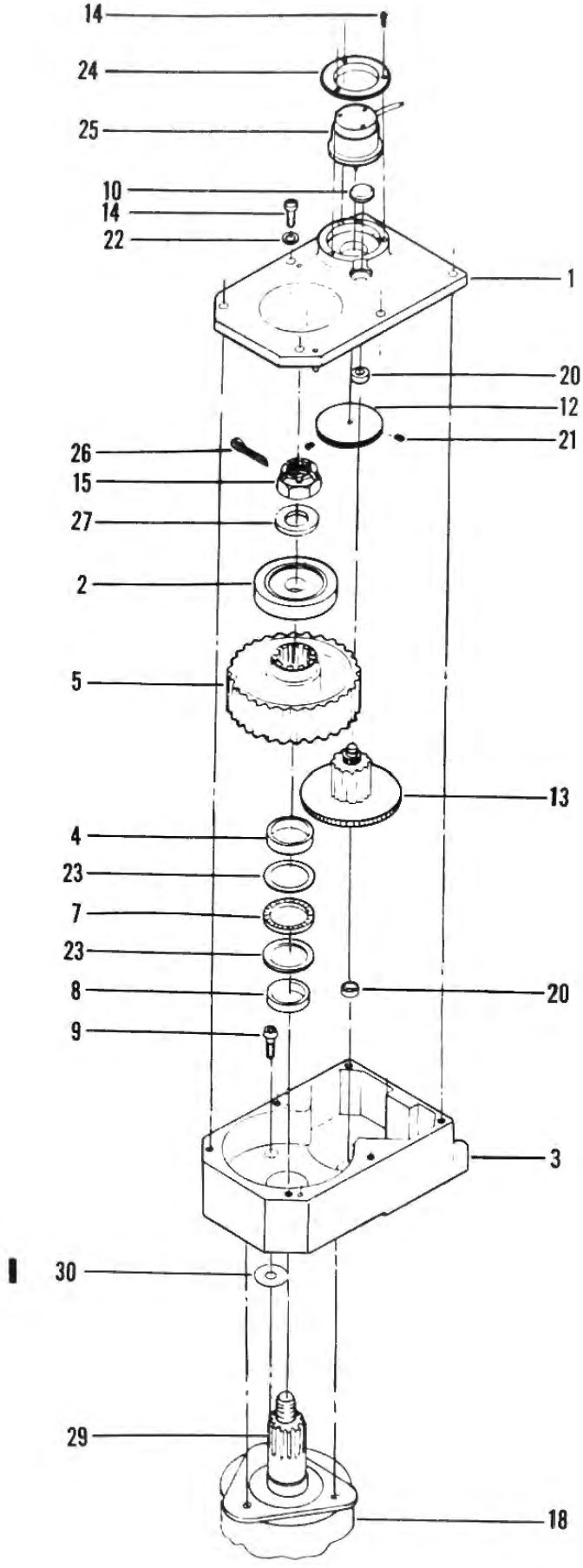

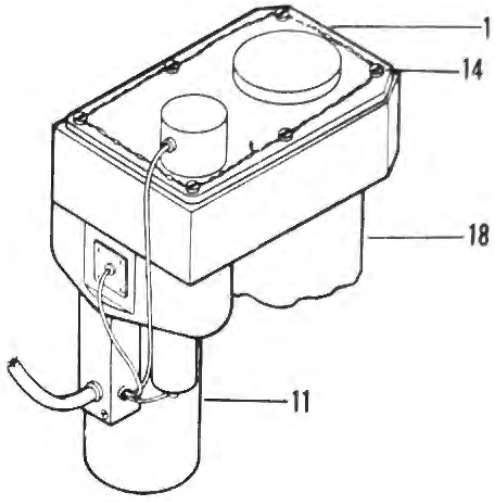

Note

Remove and discard red mounting plate attached to bottom of follow up assembly prior to installation of replacement parts.

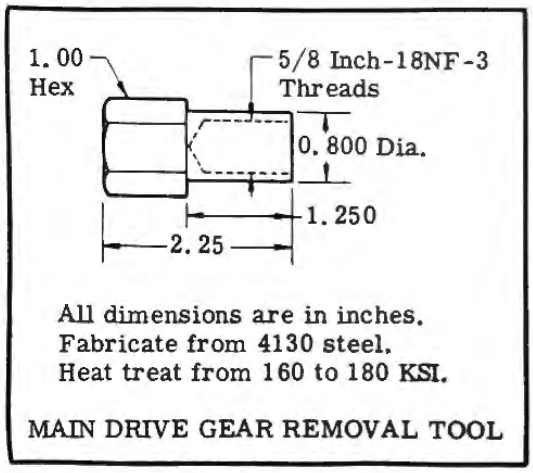

All dimensions are in inches.
Fabricate from 4130 steel.
Heat treat from 160 to 180 KSI.

MAIN DRIVE GEAR REMOVAL TOOL

Aircraft 23-026 thru 23-099

Figure 3-23. Nose Wheel Steering Actuator Assembly (Sheet 2 of 2)

b. [B] The actuator is fastened to the strut with three strut screws (9). For access to and removal of these screws, proceed as follows:

1. Remove lockwire from screws (14).
2. Remove screws (14) and washers (22) from lid (1).
3. Remove cotter pin, nut and washer (27) and ball bearing from strut.

Note

The main drive gear is secured to the strut shaft with Loctite retaining compound. To aid in removal of the main drive gear, a main drive gear removal tool may be fabricated as shown in figure 3-23.

4. Screw main drive gear removal tool fully onto strut shaft. Strike the tool with a series of sharp blows until the main drive gear is loosened on the shaft.

Note

Assure that the shaft does not fall into the strut when the tool is removed. Otherwise, the strut will have to be disassembled to retrieve the shaft.

5. Unscrew main drive gear removal tool from the shaft assuring that the shaft does not fall into the strut.
6. Remove main drive gear, cluster gear, spacer, bearing races and needle bearing.
7. Inspect bearing races and needle bearing for damage caused by driving the shaft out of the main drive gear.

Note

- Bushing (20) is pressed into the lower portion of lid. Removal is not required.
- Roller bearing (8) is pressed into case (3) and removal is not required.

8. Remove strut screws (9) and case (3) with attached servo (11) from nose gear strut (18).

NOSE WHEEL STEERING ACTUATOR - REASSEMBLY. (See figure 3-23.) Reassemble parts in reverse order of disassembly.

a. [A] Reassemble actuator as follows:

1. Clean threaded portion of all screws with a clean cloth dampened with trichlorethylene.
2. Apply Grade B Loctite (American Sealants Co, Hartford, Conn) to all screw threads immediately prior to installation.
3. Apply MIL-G-3278 grease to cluster gear as required for lubrication.
4. Align actuator case on strut and install gearbox stud (28).
5. Install and lockwire screws (6) in support (19) and bracket (16).
6. Install bearing race (23), needle bearing (7), and bearing race (23).
7. Install spacer (4) and cluster gear (13).
8. Install main drive gear (5) on strut as follows:
   (a) Clean surfaces of main drive gear internal spline and strut external spline with Locquic Grade T.
   (b) Prime surfaces with Locquic Grade T and allow to dry a minimum of 5 minutes.
   (c) Apply Loctite Retaining Compound Grade 35 to internal spline of main drive gear and external spline of strut and install main drive gear on strut.

Note

Allow Loctite to cure for 1 1/2 hours before proceeding with assembly of nose gear steering actuator.

9. Install ball bearing (2), washer (27), and strut attachment nut (15). Torque nut from 18 to 25 inch-pounds and install cotter pin (26).

CAUTION

When replacing lid (1) on case (3), it is extremely important that gears (12 and 13) mesh perfectly or damage could occur when lid (1) is in place. A small metal strip can be inserted between lid (1) and case (3) to move gear (12) slightly to aid in meshing gears (12 and 13). When gears (12 and 13) are meshed perfectly, gear (12) will not move.

10. Install lid (1) and secure using screws (14) with washers (22). Safety wire screws using double twist method.
11. Refer to RIGGING NOSE WHEEL STEERING, this section, for rigging of nose wheel steering assembly after installation on nose gear strut.

b. [B] Reassemble actuator as follows:

1. Clean threaded portion of all screws with a clean cloth dampened with trichlorethylene.
2. Apply Grade B Loctite (American Sealants Co, Hartford, Conn) to threads of all screws immediately prior to installation.
3. Apply MIL-G-3278 grease to cluster gear (13) and main drive gear (5) as required for lubrication.
4. Position actuator case on strut and measure gap between case and strut. Peel shim washers (30) to same thickness of gap and insert between case and strut. Secure case to strut using screws (9). Torque screws 50 to 70 inch-pounds and safety wire using the double twist method.
5. Install bearing race (23), needle bearing (7), and bearing race (23).

[A] Aircraft 23-003 thru 23-025.
[B] Aircraft 23-026 thru 23-099.

6. Install spacer (4) and cluster gear (13).
7. Install main drive gear (5) on strut as follows:
   (a) Clean surfaces of main drive gear internal spline and strut external spline with Locquic Grade T.
   (b) Prime surfaces with Locquic Grade T and allow to dry a minimum of 5 minutes.
   (c) Apply Loctite Retaining Compound Grade 35 to internal spline of main drive gear and external spline of strut and install main drive gear on strut.

Note

Allow Loctite to cure for 1 1/2 hours before proceeding with assembly of nose gear steering actuator.

8. Install ball bearing (2), washer (27), and strut attachment nut (15). Torque nut from 18 to 25 inch-pounds. Install cotter pin (26).

CAUTION

When replacing lid (1) on case (3), it is extremely important that gears (12 and 13) mesh perfectly or damage could occur when lid (1) is in place. A small metal strip can be inserted between lid (1) and case (3) to move gear (12) slightly to aid in meshing gears (12 and 13). When gears (12 and 13) are meshed perfectly, gear (12) will not move.

9. Install lid (1) and secure using screws (14) with washers (22). Safety wire screws using double twist method.
10. Refer to RIGGING NOSE WHEEL STEERING, this section, for rigging nose wheel steering assembly after installation to nose gear strut.

REPLACEMENT AND ADJUSTMENT OF NOSE WHEEL STEERING FOLLOWUP [B]. (See figure 3-23.)

a. Place the aircraft on jacks and remove nose gear strut.

WARNING

Before performing any disassembly of parts on the strut, ensure that all air pressure has been released through the air valve. Failure to do so can cause bodily injury. Do not release air by loosening or removing air valve, the valve interior, or any other parts.

b. Place the nose gear strut in a stand. The stand must be high enough to allow clearance of the wheel when the nose gear strut is fully extended.

Note

When the nose gear strut is removed and placed in the stand, a jumper cable must be fabricated to reconnect the nose steering actuator and followup electrically with the aircraft.

c. Refer to applicable wiring diagram and fabricate a wire bundle using the same type and size wires as shown. The plug is a Bendix P/N PT06SE-14-12P and the receptacle is a Bendix P/N PT00SE-14-12S. The length of the wire bundle should be approximately 6 feet.

d. Fully extend the nose gear strut and lock in the mechanical detent position. If the nose gear wheel cannot be physically turned, it is in mechanical detent.

e. Remove nose wheel steering followup as follows:
   1. Remove lockwire from screws (14).
   2. Remove screws (14) and washers (22) from lid (1).

CAUTION

Use extreme care to prevent damage to lid or case when removing lid from case. Both the lid and case have machined surfaces and any damage may cause an oil leak.

   3. Remove lid (1) from case (3).
   4. Loosen setscrews (21) and remove gear (12) from followup (25).
   5. Remove screw (14), ring (24), and followup (25) from lid (1).

f. Install nose wheel steering followup as follows:
   1. Install followup (25) and ring (24) on lid (1) and secure with screws (14).
   2. Apply "Loctite Retaining Compound" (manufactured by the Loctite Corporation, Newington, Conn) and position gear approximately 1/16 inch from bottom surface of lid (1).
   3. Secure gear (12) to followup (25) with setscrews (21).

[B] Aircraft 23-026 thru 23-099.

CAUTION

When replacing lid (1) on case (3), it is extremely important that gears (12 and 13) mesh perfectly or damage could occur when lid (1) is in place. A small metal strip can be inserted between lid (1) and case (3) to move gear (12) slightly to aid in meshing gears (12 and 13). When gears (12 and 13) are meshed perfectly, gear (12) will not move.

4. Install lid (1) on case (3) and secure with screws (14) and washers (20).

g. Connect nose gear electrically with the aircraft using the wire bundle fabricated in step c.

Note

The nose gear downlock switch (figure 3-12) must be actuated to apply operating 28 vdc to the nose steering actuator. The downlock switch can be actuated by extending the nose gear actuator assembly as far as possible. The right main landing squat switch, located on the upper torque arm, must be actuated to apply a signal from the rudder pedal followup.

h. Turn on battery and inverter switches. Actuate nose gear and right main gear microswitches.

i. Center rudder pedals and depress nose wheel steering switch on pilot's control wheel. If the followup is off null, the nose wheel will move out of mechanical detent and position itself with respect to the followup.

j. Loosen screws and adjust followup (25) until the nose wheel moves into mechanical detent. Retighten screws.

k. Move rudder pedals to apply either right or left rudder. The nose wheel should follow direction of rudder pedal. If nose wheel turns 180° or moves in opposite direction of rudder pedals, the followup shaft is turned 180° and steps l through n should be performed.

l. Disconnect wire bundle from nose gear and place nose wheel in mechanical detent (refer to step d).

m. Remove screws (14) from lid (1) and carefully raise lid. Do not remove lid (1) completely from case (3).

n. Noting position of gear (12) in relation to lid (1), rotate gear (12) 180°. Reinstall lid (1) on case (3) and repeat steps g through k. Torque screws (14) 20 to 25 inch-pounds and lockwire by double twist method.

o. Turn off battery and inverter switches. Disconnect wire bundle and reinflate nose gear strut in accordance with Section I of the Lear Jet Service Manual.

p. Reinstall nose gear strut and remove aircraft from jacks.

q. Check nose wheel rigging. (Refer to RIGGING NOSE WHEEL STEERING, this section.)

RIGGING NOSE WHEEL STEERING. Nose wheel rigging consists of adjusting the computer potentiometers to obtain the desired nose wheel steering radius. Refer to figure 3-22 for location of potentiometers and proceed as follows:

a. Place aircraft nose gear on nose wheel protractor (P/N 2471001).

b. Turn pedal control potentiometer completely counterclockwise.

c. Turn velocity generator potentiometer completely counterclockwise.

d. Turn followup potentiometer approximately one-fourth its full clockwise range.

e. Turn balance potentiometer approximately one-half its full clockwise range.

f. Assure D.C. power is available to aircraft.

g. Set Battery and Primary Inverter switches to ON.

h. Move rudder pedals to full right rudder position and hold.

i. Turn pedal control potentiometer clockwise until nose wheel is turned 40° to 50° right of center.

j. Center rudder pedals and depress either Primary Steering Switch on instrument subpanel; the nose wheel should move to center and oscillate.

k. Turn velocity generator potentiometer clockwise until oscillation stops plus one-eighth additional turn to assure stability.

Note

If nose wheel moves sluggishly, a higher setting of the followup potentiometer may be necessary. If so, turn followup potentiometer 3/8 its full clockwise range and return to step e., proceed again.

l. With rudder pedals centered, turn balance potentiometer until nose wheel is centered.

m. Move rudder pedals to full left rudder position and hold; the nose wheel should turn 40° to 50° left of center.

n. Center rudder pedals and nose wheel should return to center and stop.

o. With rudder pedals and nose wheel centered, depress and release primary steering switch while observing nose wheel. If wheel shifts direction when primary steering switch is depressed and released, adjustment of the rudder pedal synchro housing is required. This is to assure that the synchro is nulled when the rudder is exactly centered relative to the aircraft centerline.

p. Depress wheel master switch on either control wheel and move rudder pedals to full left and full right rudder positions while observing nose wheel travel. Nose wheel travel should be 6° to 10° both left and right of center.

q. Actuate primary steering switch and move nose wheel to approximately 40° right.

r. Deenergize both squat switches with blocks. The nose wheel shall return to center.

s. With squat switches deenergized, alternately actuate the Primary Steering and Master Steering switches and move the rudder pedals through full travel. The nose wheel shall not move.
t. Reenergize squat switches and move nose wheel to approximately 40° left.
u. Deenergize both squat switches with blocks. The nose wheel shall return to center.
v. Reenergize squat switches.
w. Set Primary Inverter Switch and Battery Switch to OFF and disconnect DC power source from aircraft.
x. Remove protractor assembly from under nose wheel.

MAIN LANDING GEAR. (See figure 3-24.) The main landing gear consists of a conventional air-hydraulic shock strut, dual wheels, and a brake system incorporating anti-skid capabilities. Each main gear strut is attached to the wing at two points. Additional support is obtained from the main gear actuator. A landing light is also installed on each main gear strut.

MAIN LANDING GEAR WHEELS. (See figure 3-25.) Each set of main landing gear wheels consists of an inboard and outboard wheel half made of cast [A] aluminum ([B] magnesium alloy), fastened together with bolts, washers, and nuts. The wheel halves are mounted on the axles of the main landing gear shock struts. Each inboard wheel half has a machined groove to accommodate an O-ring seal which retains tire pressure and two fusible plugs for release of excessive tire pressure. The inboard wheel halves contain seven slots which are fitted with disc drive keys. The keys drive the rotating brake discs when the wheels are in motion. Each outboard wheel half contains a valve assembly for servicing the tires. Both wheel halves are fitted with [A] grease seals and cone bearings or [B] tapered cone bearings, which are rubber sealed, to prevent contamination entry and lubrication loss.

MAIN LANDING GEAR WHEEL - REMOVAL. (See figure 3-26.)

Note

If only a single main gear tire is flat, running the opposite tire up on a block (2 x 4) provides adequate clearance for changing the tire. Jacking of the aircraft is not required.

a. Place aircraft on jacks and deflate tire by removing valve cap and valve core.

WARNING

Do not loosen or remove bolts or nuts without completely deflating tire. Failure to comply can cause bodily injury.

b. Cut lockwire and remove screws from anti-skid drive cap.
c. Remove wheel drive cap.
d. Remove axle nut screws, axle nut, key washer, and outer collar.
e. Remove wheel from aircraft.

CAUTION

Do not drop or damage cone bearings during wheel removal. Place wheel on a clean flat surface during disassembly to prevent damage to wheel halves.

MAIN LANDING GEAR WHEEL - DISASSEMBLY. (See figure 3-25.)

Note

Inspect the aircraft wheel halves each time the tires are removed. Perform inspection in accordance with MAIN GEAR WHEEL - INSPECTION, this section. This will preclude flight delays by detecting possible wheel failures before they occur.

a. Break tire beads away from both wheel flanges by applying even pressure around entire sidewall as close to beads as possible.
b. Remove self-locking nuts, washers, bolts, and countersunk washers.
c. Separate wheel halves and remove tire.
d. Use care to prevent damage to wheel O-ring seal during its removal.

Note

Removal of valve stem and fusible plugs is not required except for inspection during wheel overhaul.

e. Disc drive keys may be removed by [A] removing attaching screw or [B] pressing ends together.
f. Do not remove bearing cups unless replacement is required.
g. Remove bearing cups by driving cup out with a fiber drift pin.
h. Clean metal parts with P-S-661 cleaning solution and wipe with a clean lint-free cloth.
i. Clean cone bearings in a separate container and dry with low pressure filtered air.

CAUTION

Do not soak bearings in cleaning solution as seal damage may result. Do not spin bearings when drying with compressed air.

j. Place reusable wheel O-ring seals on a flat surface, clean with denatured alcohol, and dry with a lint-free cloth.

[A] Aircraft 23-003 thru 23-099 except aircraft modified by SK23/24-219.
[B] Aircraft 23-003 thru 23-099 modified by SK23/24-219.

Learjet Temporary Service Manual Revision

MANUAL AFFECTED: Gates Learjet Model 23 Service Manual

FILING INSTRUCTIONS: Insert adjacent to page 3-62 and retain until further notice.

REASON: To add torque check on wheel nuts.

INSTRUCTIONS: Under MAIN LANDING GEAR WHEEL - DISASSEMBLY, add the following NOTE preceeding step b.

NOTE

Before loosening self locking nuts on B , use a torque wrench and tighten nuts. Note torque at which nuts begin to turn. Discard any nut which turns with less than 60 inch-pounds of torque.

1. Trunnion Pin - Aft
2. [C] Linkage Bracket - Main Gear Directional Control
3. [D] Switch Striker - Left and Right Gear Up
4. [D] Switch Striker - Right Gear Safety
5. Shim
6. Main Gear Trunnion - Left
7. [B] Hydraulic Fuse
8. Trunnion Pin - Fwd
9. Light - Landing
10. Torque Arm - Upper
11. Bolt - Door Link Attach
12. Link - Outboard Door
13. Washer
14. Bolt - Torque Arm Apex
15. Torque Arm - Lower
16. [E] Laminated Shim
17. Bolt - Fwd Trunnion Pin
18. Hydraulic Hose - Gear Extend
19. Pillar - Actuator Attach
20. Spacer
21. Washer
22. Actuator - Left Main Gear
23. Hydraulic Hose - Gear Retract
24. Switch - Gear Down and Locked
25. Hydraulic Hose - Brake Pressure Inbd
26. Hydraulic Hose - Brake Pressure Outbd
27. Air Valve
28. Bolt - Aft Trunnion Pin
29. Squat Switch
30. Switch Plate
31. Retaining Washer

[B] Aircraft 23-070 thru 23-099 and Aircraft Modified by SK23-137
[C] Aircraft 23-003 thru 23-079
[D] Aircraft 23-080 thru 23-099
[E] Aircraft 23-090 thru 23-099 and Aircraft Modified by SK23-176

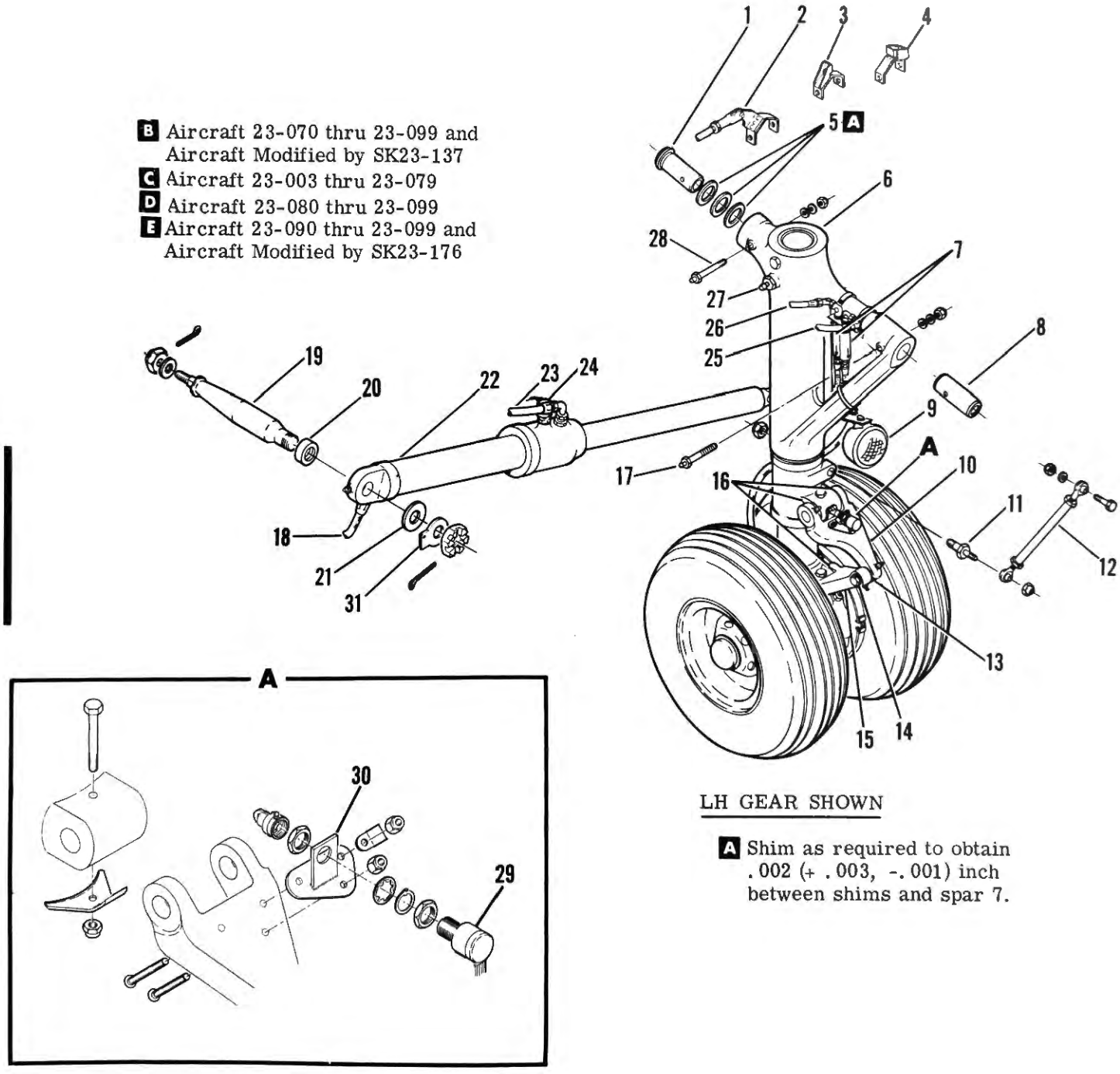

LH GEAR SHOWN

[A] Shim as required to obtain .002 (+ .003, -.001) inch between shims and spar 7.

Figure 3-24. Main Landing Gear Installation

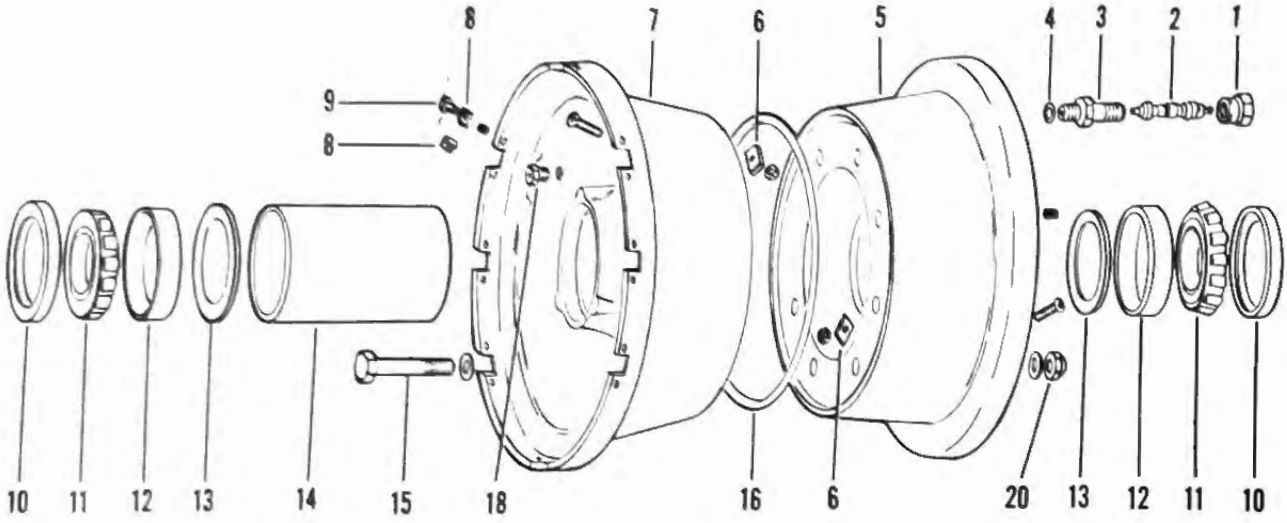

Aircraft 23-003 thru 23-099 except aircraft modified by SK23-219.

1. Valve Cap
2. Valve Core
3. Valve Stem
4. O-Ring
5. Wheel Half (Outboard)
6. Balance Weight
7. Wheel Half (Inboard)
8. Disc Drive Key
9. Screw
10. Seal

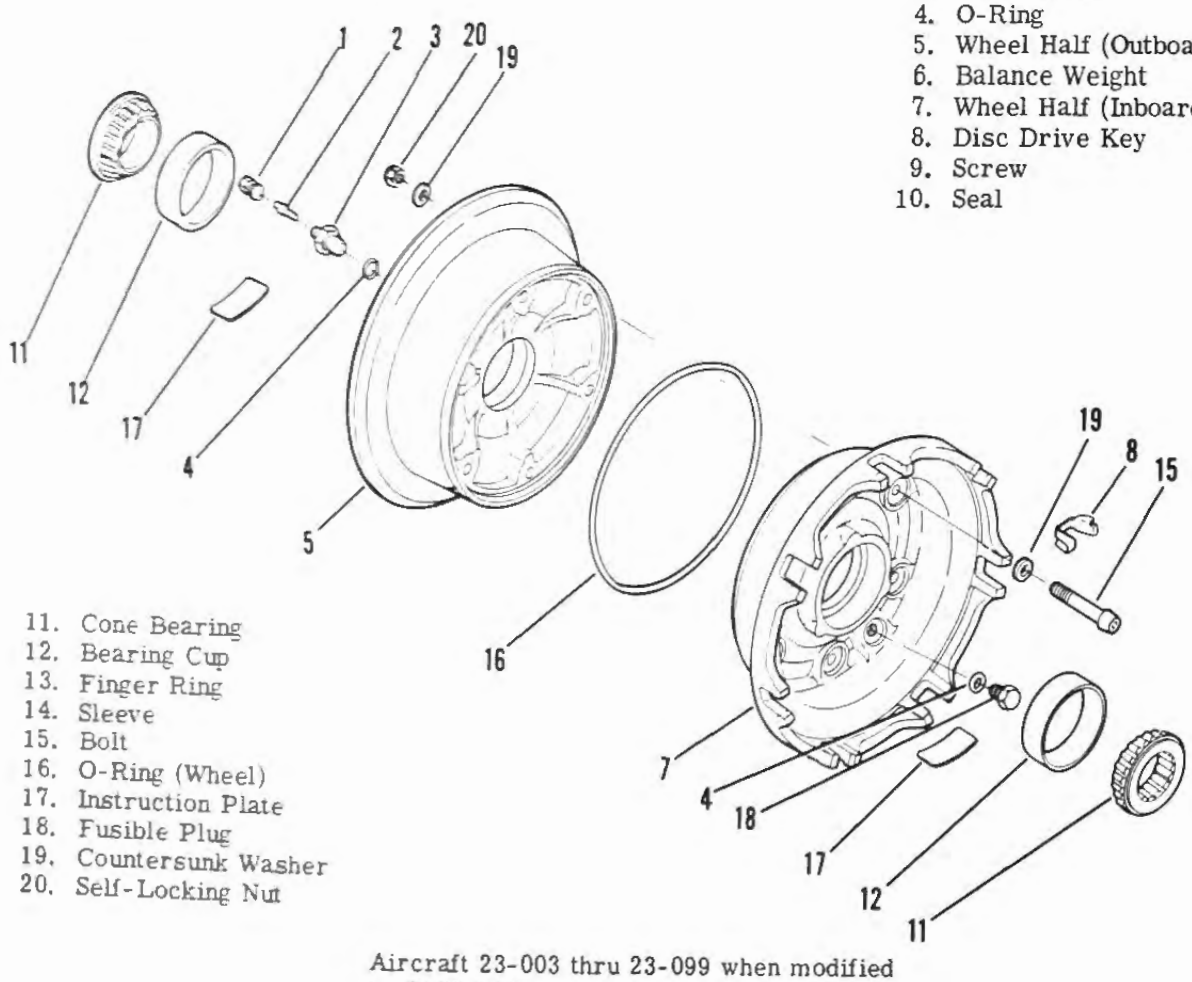

11. Cone Bearing
12. Bearing Cup
13. Finger Ring
14. Sleeve
15. Bolt
16. O-Ring (Wheel)
17. Instruction Plate
18. Fusible Plug
19. Countersunk Washer
20. Self-Locking Nut

Aircraft 23-003 thru 23-099 when modified by SK23-219.

Figure 3-25. Main Landing Gear Wheel Assembly

MAIN LANDING GEAR WHEEL - INSPECTION. (See figure 3-25.)

a. Visually inspect metal parts for cracks, distortion, or other damage. Any suspected area should be checked by fluorescent penetrant, dye check, acetic acid etch, or other suitable method.

b. Check threaded parts for stripped, crossed, or damaged threads.

c. Inspect O-ring seal for damage, distortion, or wear.

d. Check bearing cups for looseness, nicks, pitting, and rust.

e. Inspect cone bearings for roller wear, cage wear, rubber seal deterioration, nicks, pitting, rust, or other damage.

f. Check bearing seals for cuts, nicks, or wear.

g. Inspect bolts for deformation, cracks at head junction, and first two threads adjacent to shank with a 10-power magnifying glass or by magnetic particle inspection.

h. Inspect self-locking nuts. Replace nuts after reusing 10 times or if nuts can be turned past self-locking position by hand.

i. Inspect fusible plugs for pitting, rust, and gasket damage.

Note

Fusible plugs must be checked for leakage using liquid soap solution, with tires inflated. If leakage exists, replace plugs.

j. Check wheel disc drive key areas for damage and wear.

k. Replace cracked or distorted castings and parts.

l. Polish out small nicks and blemishes with fine emery cloth.

m. Refinish bare metal areas with two coats of MIL-L-8585 zinc chromate primer and two coats of MIL-L-7178 aluminum lacquer.

Note

Refinish wheel register area with a mist coat of zinc chromate primer only.

n. Replace all rubber parts at each wheel overhaul.

MAIN LANDING GEAR WHEEL - REASSEMBLY. (See figure 3-25.)

CAUTION

Remove fusible plugs and valve stem before heating wheel half for installation of cone bearings.

a. Replace bearing cups by heating wheel half to 121° C (250° F) maximum for 30 minutes.

b. Chill bearing cups with dry ice for 30 minutes.

c. Remove wheel half from heat source and install bearing cups immediately.

d. To install valve stem, lubricate gasket with a light coat of MIL-G-4343 grease and place on stem.

e. Install valve stem into wheel half. [B] Torque to 180 to 200 inch-pounds.

f. To install fusible plugs, lubricate O-rings and threads with a light coat of MIL-G-7711 grease.

g. Install fusible plugs. [B] Torque to 80 to 90 inch-pounds.

h. Clean wheel register, bead seat area, and tire beads with a clean cloth dampened with denatured alcohol.

i. Visually check tire and tire beads for damage before installation.

j. Lubricate wheel O-ring seal with a light coat of MIL-G-4343 grease.

k. Place inboard wheel half on a clean flat surface and install wheel O-ring seal.

CAUTION

Reused wheel O-ring seals should be installed in their original position. Assure that seal is not twisted.

l. Place tire on inboard wheel half with red balance dot equally spaced between two bolt holes.

CAUTION

Assure that wheel O-ring seal is not disturbed during tire installation.

m. Place outboard wheel half in tire with valve stem located at red balance dot and align bolt holes.

n. Lubricate bolt threads, bolt head bearing surfaces, washers, and nut with MIL-T-5544 anti-seize compound.

o. Install countersunk washers with the countersunk areas facing bolt heads.

p. Install bolts through wheel halves and secure with washers and self-locking nuts.

q. Tighten nuts evenly in a criss-cross pattern and torque to [A] 70 to 90 ([B] 120) inch-pounds.

r. Install valve core in valve stem and inflate tire sufficiently to seat tire beads.

s. Snap disc drive keys and drive key slots of inboard wheel half.

MAIN LANDING GEAR WHEEL - INSTALLATION. (See figure 3-25.)

a. Pack cone bearings with MIL-G-81322 (preferred) or MIL-G-3545 grease and spread an even coat of grease on bearing cups and on [A] cone bearing seals.

b. Install inboard cone bearing on axle, then install wheel and outboard cone bearing.

[A] Aircraft 23-003 thru 23-099 except aircraft modified by SK23/24-219.

[B] Aircraft 23-003 thru 23-099 modified by SK23/24-219.

c. Install outer collar, key washer, and axle nut. (See figure 3-26.)
d. Tighten axle nut until a definite bearing drag is noted while rotating wheel and check that there is no side motion.

Note

Back off axle nut to next castellation and install axle nut screws into slots and lockwire.

e. Install anti-skid drive cap and lockwire screws per double twist method.
f. Inflate tire and install drive cap. (Refer to SERVICING TIRES, Section I.)

Note

- After pressure has stabilized, the tire shall hold normal inflation pressure for 24 hours with no more than a 4% pressure loss.
- Soap check fusible plugs for leakage. If leakage exists, deflate tire, replace plug(s), and reservice tire.

MAIN GEAR SHOCK STRUTS. (See figure 3-26.) Each shock strut is a conventional air-hydraulic unit designed to absorb the shock of landing, takeoff, and taxiing. It is essentially a steel piston riding in a cylinder and utilizing O-rings to prevent leakage between the piston and the outer cylinder. An air-oil filler valve is provided on the strut. Refer to Section I for servicing instructions.

TORQUE ARM REPLACEMENT. (See figure 3-26.)

Note

- Replace upper and lower torque arms in sets only, using new bushings (36), pins (18), spacers (25), and bushing (24). The upper and lower torque arm yoke ends are final machined after installation of bushings.
- It is recommended that the upper and lower torque arms be replaced if the tolerance between torque arm bushings and pins (18) exceeds .009 total.

a. Place aircraft on jacks.
b. Remove wheels. (Refer to MAIN LANDING GEAR - REMOVAL, this section.)
c. Remove brakes. (Refer to MULTIPLE DISC BRAKE - REMOVAL, this section.)
d. Remove torque arms (17 and 23) as follows:
1. Remove bolt (26), washers (8), and nut (37) from torque arms.
2. Remove torque arm bushing (24), releasing spacer (25) and washer (8).
3. Remove bolt and nut retaining torque arm pins (18), press out pins (18), and remove torque arms.
4. Press out bushings (36).
e. Install torque arms (17 and 23) as follows:

Note

Freeze bushings (36) and pins (18) to -75° F. Remove parts individually from freezer and install immediately.

1. Press in bushings (36). When bushings have warmed to normal temperature, line ream both bushings to 0.5625 (+.0005 - .0000). Clean thoroughly to remove shavings.
2. With upper torque arm in the installed position, press in pin (18) and reinstall bolt and nut.
3. With lower torque arm in the installed position, press in pin (18) and reinstall bolt and nut.
4. Align upper torque arm (17), spacer (25), washer (8), and lower torque arm (23) and insert bushing (24).
5. Reinstall bolt (26), washers (8), and nut (37).
6. Reinstall brakes. (Refer to MULTIPLE DISC BRAKE - INSTALLATION, this section.)
7. Reinstall wheels. (Refer to MAIN LANDING GEAR - INSTALLATION, this section.)

TORQUE ARM BUSHING REPLACEMENT. (See figure 3-25A.)
a. Remove the torque arms in accordance with TORQUE ARM REPLACEMENT, this section.
b. Press out the upper and lower torque arm bushings that are to be replaced.
c. Install new bushings as follows:
1. Apply a coat of zinc chromate primer to bushing and press bushings into torque arms. Care should be taken not to plug the grease hole in the bushing.
2. Line ream bushings to the dimensions shown.
3. Machine the flat surface of the bushing to obtain the required dimensions shown.
d. Install torque arms in accordance with TORQUE ARM REPLACEMENT, this section.

MAIN GEAR SHOCK STRUT - REMOVAL. (See figure 3-24.)
a. Place aircraft on jacks.
b. Depressurize hydraulic system. (Refer to HYDRAULIC SYSTEM, this section.)

c. Remove hydraulic actuator. (Refer to MAIN GEAR ACTUATOR - REMOVAL, this section.)
d. Remove cap from air valve (27) and depress valve pin until all air pressure is released from strut.
e. Remove clamps securing electrical wiring and hydraulic hoses to gear strut.

Note

When the squat switch and landing light are removed, tie them to aircraft structure out of the immediate work area. This will eliminate the cutting and splicing of electrical wiring.

f. Remove squat switch (29) and landing light (9) from strut.
g. Remove nut and bolt attaching outboard door link (12) to trunnion.

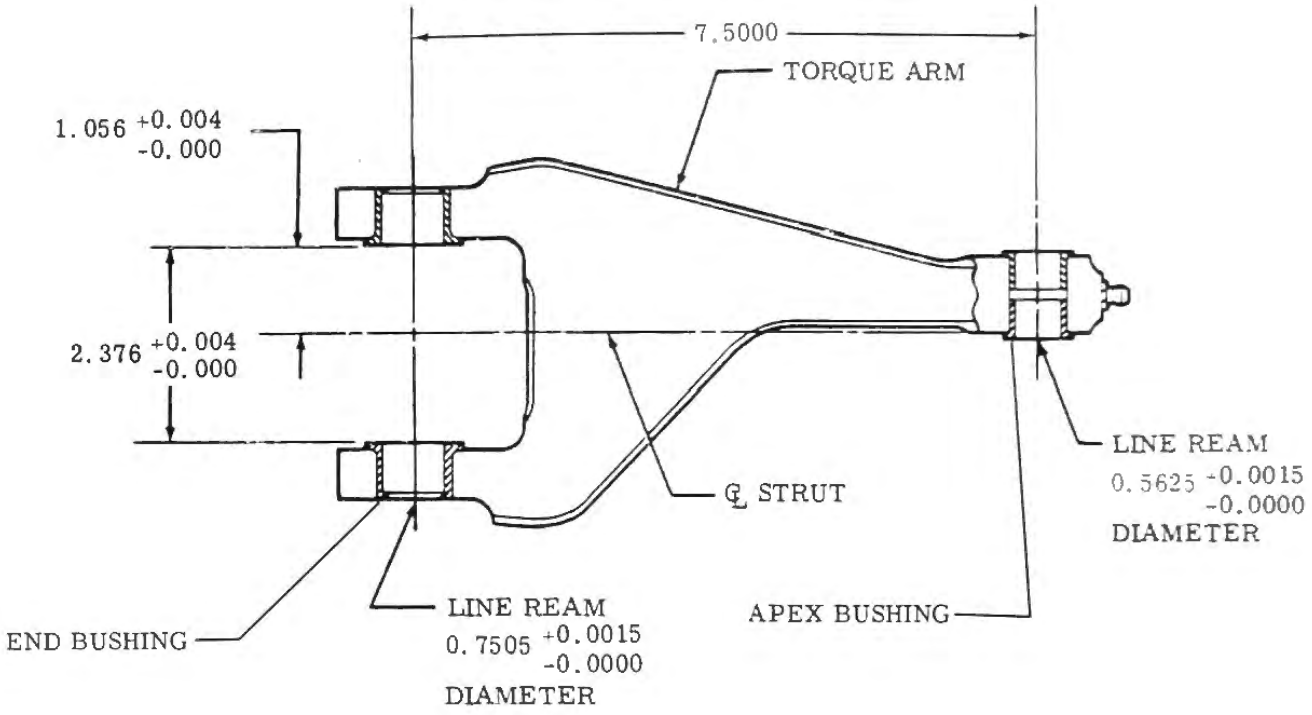

Figure 3-25A. Torque Arm Bushing Replacement

1. Backup Ring
2. O-Ring
3. Orifice Tube
4. Seal Ring
5. Metering Pin
6. Air Valve
7. Trunnion Pin
8. Washer
9. Shim
10. Bolt (Orifice)
11. Actuator Pin
12. Bushings (Actuator Pin)
13. Bushings
14. Retaining Ring Lock Screw
15. Screw
16. Retaining Ring Lock
17. Torque Arm (Upper)
18. Torque Arm Pins
19. Axle Nut
20. Key Washer
21. Outer Collar
22. Inner Collar
23. Torque Arm (Lower)
24. Torque Arm Bushing
25. Spacer
26. Bolt (Torque Arm)
27. Axle
28. Piston
29. Piston Head
30. Snap Ring
31. Retainer
32. Rod Scraper
33. Felt Strip
34. Lower Bearing
35. Follower
36. Bushings (Upper Torque Arm)
37. Nut
38. Cylinder
39. Bolt

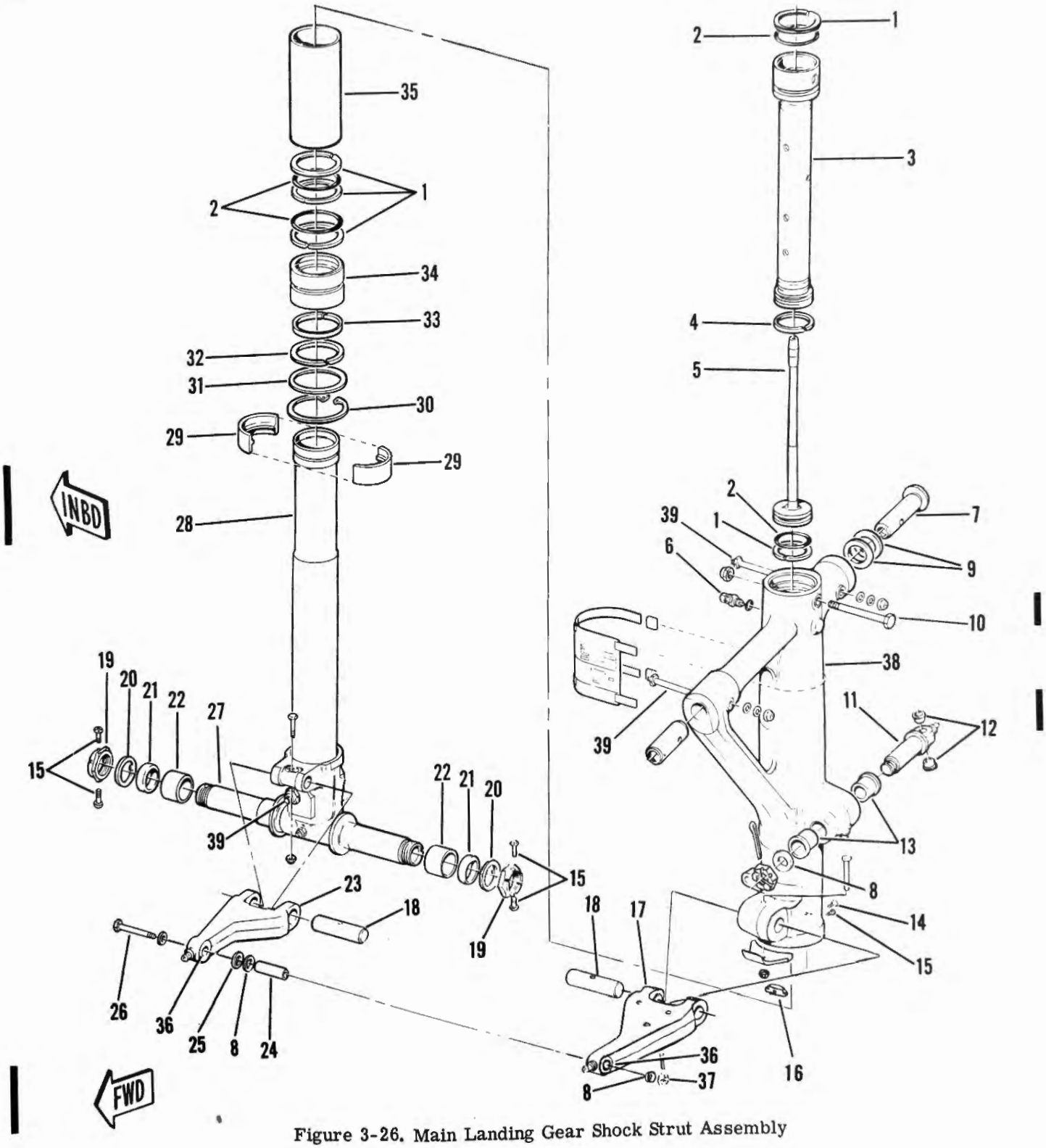

Figure 3-26. Main Landing Gear Shock Strut Assembly

h. Disconnect hydraulic brake hoses (25 and 26) from brake assemblies; cap lines and plug ports in brakes.

Note

Tie hydraulic lines and clamp assembly to structure out of the immediate work area.

i. Remove hydraulic lines and clamp assembly from main gear trunnion.
j. Disconnect anti-skid electrical wiring.
k. Remove access door inboard of gear hinge point on spar No. 7 to gain access to aft trunnion pin (1).
l. Remove bolt (28) from aft side of trunnion (6) releasing switch striker (3).

WARNING

Removal of trunnion pin (1) releases the main gear from the aircraft. Adequate support must be given the gear to prevent it falling and causing bodily injury or damaging the aircraft.

m. Remove trunnion pin (1) by screwing an AN8-20 bolt into aft end of pin (1) behind spar No. 7. As pin (1) is removed, shims (5) will be released.

MAIN GEAR SHOCK STRUT - DISASSEMBLY. (See figure 3-26.) During disassembly, tag and keep all parts together for reassembly into the same unit.

WARNING

Before performing any disassembly of parts on the strut, ensure that all air pressure has been released through the air valve. Failure to do so can cause bodily injury. Do not release air by loosening or removing air valve, the valve interior, or any other part.

Note

It is not necessary to remove anti-skid generator during disassembly of main landing gear shock strut.

a. Remove cap from air valve (6) and depress valve pin until all air pressure is released from strut.
b. Remove wheels. (Refer to MAIN LANDING GEAR WHEEL - REMOVAL, this section.)
c. Remove brakes. (Refer to MULTIPLE DISC BRAKE - REMOVAL, this section.)
d. Drain hydraulic fluid through air valve port. Move piston through stroke to aid draining.
e. Remove bolt (10) releasing orifice tube (3) and remove orifice tube from cylinder (38).

Note

Upon removal, discard all O-rings (2), backup rings (1), seal ring (4), felt strip (33), and rod scraper (32).

f. Remove O-ring (2), backup ring (1), and seal ring (4) from orifice tube (3).

Note

Metering pin removal tool may be locally manufactured. (See figure 3-27.)

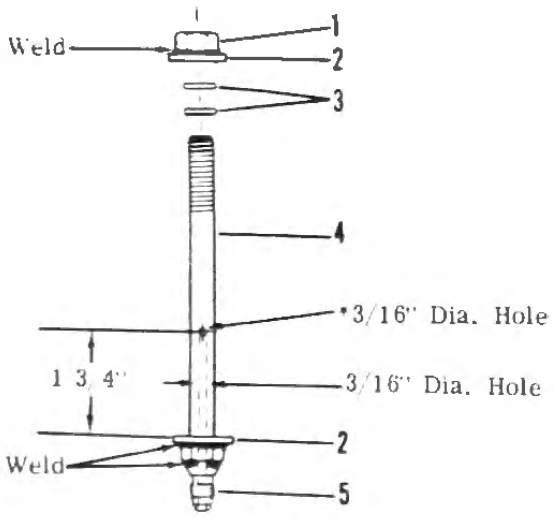

1. Nut (AN335-7)
2. Washer (AN960C-716)
3. O-Ring (MS28778-5)
4. Bolt (AN7C-57)
5. Union (AN815-4)

*Drill to meet hole through center of bolt. Do not drill completely through bolt.

Figure 3-27. Metering Pin Removal Tool

g. Remove metering pin (27) as follows:
1. Remove bolt (39) through brake reaction pads.
2. Install metering pin removal tool in bolt hole.
3. Attach a hydraulic pressure source to removal tool end fitting.
4. Slowly apply hydraulic pressure until metering pin rises sufficiently in cylinder (38) for removal.
5. Disconnect hydraulic pressure source and replace removal tool with bolt (39).
6. Remove O-ring (2) and backup ring (1) from metering pin (5).
7. Remove bolt (26), washer (8), and nut (37) securing torque links.
8. Remove bushing (24) releasing washer (8) and spacer (25).
9. If torque arm replacement is necessary, refer to MAIN LANDING GEAR TORQUE ARM - REPLACEMENT, this section.

h. Remove retaining ring lock screw (14) releasing retaining ring lock (16) from cylinder. Remove snap ring (30) from inside cylinder (38).

i. Remove piston (28) from cylinder (38) releasing piston head (29) from piston.

j. Remove follower (35), lower bearing (34), retainer (31), and snap ring (30) from piston (28).

k. Remove O-rings (2), backup rings (1), felt strip (33), and rod scraper (32) from lower bearing (34).

l. Clean all metal parts with Stoddard solvent or equivalent.

m. Remove all fingerprints from machined surfaces not plated or painted with a suitable fingerprint neutralizer.

n. Dry metal parts after cleaning with clean, dry compressed air.

Note

When storing unplated machine surface parts more than a few hours, coat with MIL-C-11796 preservative. Remove preservative prior to assembly of parts.

o. Coat internal metal parts with MIL-H-5606 hydraulic fluid.

p. Wrap cleaned metal parts in lint-free cloth or clean waxed paper while awaiting repair or reassembly.

MAIN GEAR SHOCK STRUT - WEAR TOLERANCE INSPECTION. (See figure 3-28.)

a. Screen drained hydraulic fluid for metal particles which may be used as an aid in determining trouble source.

b. Inspect all metal parts including welds, machined and forged parts for evidence of structural failure, nicks, burrs, cracks, corrosion, worn threads, and excessive wear.

Note

Perform a magnetic particle inspection on all ferrous parts. Perform an etching or fluorescent penetrant check on all aluminum parts. After ferrous parts inspection, demagnetize to remove all metal particles.

c. Check all friction surfaces of bushings and strut holes for out of round and taper using an internal micrometer, plug gages, or similar equipment.

d. Inspect OD and ID surfaces of piston and ID surfaces of cylinder for galls, scratches, scoring, corrosion, and worn plating.

Note

Any parts which are damaged, cracked, excessively worn, scored, corroded, or do not meet inspection requirements or tolerances must be replaced.

e. Buff out minor scratches in piston, cylinder, piston head, lower bearing, and trunnion pins.

Note

Do not create low spots by excessive buffing or polishing. Use oil stone to remove the scratches and polish with crocus cloth. Check tolerances after polishing.

MAIN GEAR SHOCK STRUT - REASSEMBLY. (See figure 3-26.)

Note

Except for new parts, reassemble the same parts in strut assembly from which they came.

a. Slide snap ring (30) and retainer (31) on piston (28).

Note

Immerse O-rings (2), backup rings (1), seal ring (4), felt strip (33), and rod scraper (32) in MIL-H-5606 hydraulic fluid immediately prior to installation.

b. Install O-ring (2) and backup ring (1) in outside groove of lower bearing (34).

c. Install felt strip (33), O-ring (2), backup ring (1) and rod scraper (32) inside grooves of lower bearing (34).

d. Install lower bearing (34) and follower (35) on piston (28).

OUTSIDE DIAMETER			
Nomenclature	Original O. D. (Inches)	Surface Finish (RMS)	Minimum O. D. (Inches)
Trunnion Pin	1.2593 / 1.2573	63	1.256
Shim	1.1245 / 1.1225	63	1.121
Actuator Pin	1.122 / 1.120	63	1.119
Axle (ends)	1.4998 / 1.4988	63	1.497
Torque Arm Bushing	0.5605 / 0.5595	100	0.558
Torque Arm Pins	0.7500 / 0.7495	63	0.744
Piston Head	3.247 / 3.245	32	3.240
Piston	2.998 / 2.996	16	2.9945

INSIDE DIAMETER				TOTAL CLEARANCE DIAMETER	
Nomenclature	Original Hole Size I. D. (In.)	Surface Finish (RMS)	Maximum Hole Size I. D. (In.)	Original Inches	Maximum Wear (In.)
Cylinder	1.2608 / 1.2598	125	1.262	0.0032 / 0.0005	0.006
Cylinder	1.1260 / 1.1250	125	1.128	0.0035 / 0.0005	0.007
Cylinder	3.252 / 3.250	63	3.256	0.007 / 0.003	0.016
Pin Bushing	0.5640 / 0.5625	100	0.566	———	———
Actuator Bushings	1.1265 / 1.1250	125	1.129	0.0065 / 0.0030	0.010
Apex Bushings	0.5640 / 0.5625	100	0.565	0.0045 / 0.0020	0.007
End Bushings	0.7515 / 0.7500	100	0.753	0.0060 / 0.0025	0.009
Lower Bearing	3.002 / 3.000	32	3.008	0.006 / 0.002	0.0135

Figure 3-28. Main Gear Shock Strut - Wear Tolerances (Sheet 1 of 2)

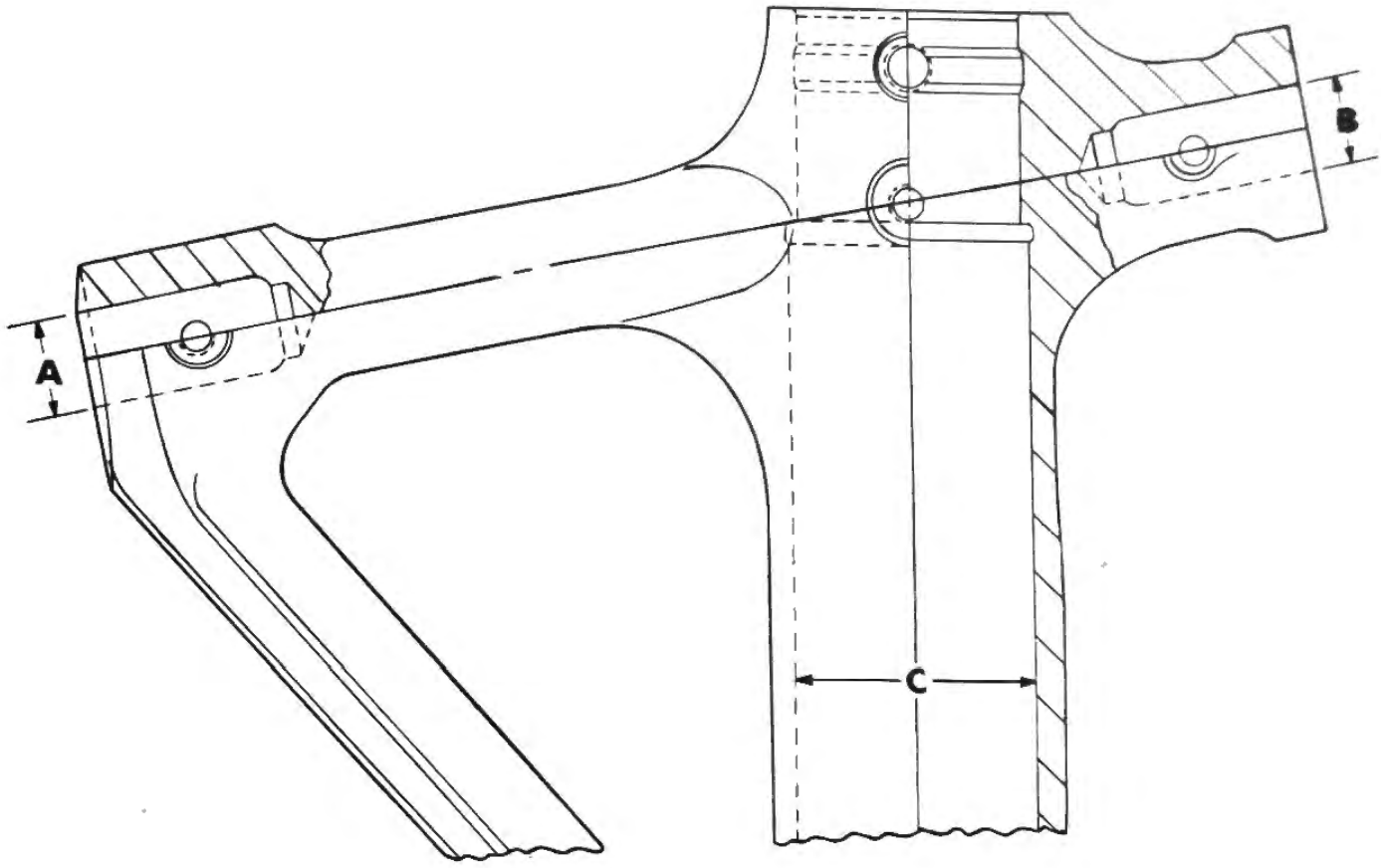

Cylinder - Main Gear Shock Strut

A. 1.2598-1.2608, Surface finish (RMS 125)
B. 1.1250 - 1.1260, Surface Finish (RMS 125)
C. 3.250 - 3.252, Surface Finish (RMS 63)

Note

See Sheet 1 for wear tolerances.

Figure 3-28. Main Gear Shock Strut - Wear Tolerances (Sheet 2 of 2)

e. Install O-ring (2) and backup ring (1) on metering pin (5).
f. Install metering pin (5) inside piston (28). Assure that metering pin is bottomed in piston.

Note

The piston head (29) consists of two matched halves and is to be replaced only as a complete unit.

g. With piston head (29) assembled on piston (28), slide piston assembly (28) into lower end of cylinder (38) until bottom end of cylinder (38) contacts bottom of piston (28).
h. Assuring that rod scraper (32) is properly installed, insert retainer (31) firmly in cylinder (38) and position snap ring (30) into groove inside cylinder.
i. Assemble seal ring (4) on orifice tube head and O-ring (2) and backup ring (1) on orifice tube end.
j. Insert orifice tube inside cylinder assuring that metering pin (5) is aligned with metering pin hole in orifice head. Secure orifice end with bolt (10) and nut.
k. Install retainer ring lock (16), with screw (14), and secure with safety wire.
l. Replace lubricators removed during disassembly.

Note

Replace worn or damaged bushings in pairs only. If bushings are to be replaced, comply with steps m and n.

m. Coat outside diameter and adjacent flanges of new bushings with zinc chromate primer and press into place while primer is wet.
n. After installation, coat bushing faces with zinc chromate primer. Remove excess primer from lubricator holes.
o. Fill main gear shock strut with hydraulic fluid in accordance with landing gear nameplate attached to strut.
p. Install air valve (6) and torque to 350 inch-pounds.
q. Refinish all external painted surfaces with one coat of wash primer, one coat of zinc chromate primer, and one coat of aluminized lacquer.

MAIN GEAR SHOCK STRUT - FUNCTIONAL TEST.
a. Place completely assembled and fully serviced strut in vertical or horizontal position.
b. Pressurize strut with dry compressed air or nitrogen to 222 to 232 psi. Strut shall extend as pressure is applied.
c. There shall be no fluid leakage or loss of air pressure during a 1-hour period.
d. After completion of test, release all air from strut through air valve.

Note

Repeat step c of MAIN GEAR SHOCK STRUT - REMOVAL, this section.

e. After air pressure is released, replace cap on air valve.
f. Install brakes. (Refer to MULTIPLE DISC BRAKE - INSTALLATION, this section.)
g. Install wheels. (Refer to MAIN LANDING GEAR WHEEL - INSTALLATION, this section.)
h. Refer to Section I for servicing instructions.

MAIN GEAR SHOCK STRUT - INSTALLATION. (See figure 3-24.)

Note

If the forward trunnion pin (8) has been removed from the shock strut, perform step a.

a. Install forward trunnion pin (8) on shock strut and secure with bolt (17) and nut.
b. Screw an AN8-20 bolt temporarily into aft trunnion pin (1) to assist in trunnion pin installation.
c. Insert aft trunnion pin (1) from aft side of spar No. 7 through trunnion bearing. Place same number of shims as previously removed on aft trunnion pin (1).
d. Raise shock strut and insert forward trunnion pin (8) into forward trunnion bushing.
e. Align aft end of shock strut trunnion pin hole with trunnion pin (1) assuring shims are still in place.

Note

Using a feeler gage, assure tolerance between shock strut and spar No. 7 is .002 (+.003/-.000). Remove or add shims as required to obtain correct tolerance.

f. Insert aft trunnion pin into shock strut. Align hole in trunnion pin with hole in shock strut and temporarily install attaching bolt (28) and check tolerance.
g. Remove bolt (28) and align holes in switch striker (3) with holes aligned in step f. Insert bolt (28) through switch striker, trunnion, and trunnion pin and secure with nut.
h. Remove the AN8-20 bolt from aft trunnion pin.
i. Reinstall access door on spar No. 7.
j. Reinstall brake hydraulic hoses and clamps on main gear strut and connect hoses to brake ports.
k. Connect anti-skid electrical wiring.
l. Reinstall outboard door link to main gear strut and secure with bolt (11) and nut.
m. Reinstall main gear squat switch and landing light.

n. Adjust squat switch. (Refer to MAIN GEAR SQUAT SWITCH - ADJUSTMENT, this section.)
o. Reinstall clamps securing electrical wiring to gear strut.
p. Reinstall main gear actuator. (Refer to MAIN GEAR ACTUATOR - INSTALLATION, this section.)
q. Remove aircraft from jacks.

MAIN GEAR ACTUATOR. (See figure 3-29.) Each main gear is retracted and extended by an actuator which is attached to the shock strut and to a pillar in the wing structure. A spring load, built into the actuator, drives a sleeve arrangement which entraps steel balls engaging a notch in the piston rod to cause a positive mechanical locking action when the main gear is in the down position. An integral switch in the actuator transmits a gear down and locked indication to the position indicator when the sleeve arrangement has fully entrapped the down locking arrangement. Hydraulic pressure in excess of 250 psi is required to retract the sleeve arrangement against its driving spring to release the downlock mechanism and permit gear retraction.

MAIN GEAR ACTUATOR - TROUBLE SHOOTING.

TROUBLE	PROBABLE CAUSE	CORRECTION
FLUID LEAK AT CYLINDER.	Worn or damaged O-rings.	Replace O-rings.
PISTON STICKS OR BINDS.	Worn or damaged O-rings, backup ring or rod scraper. Scoring in cylinder bore or on piston.	Replace worn or damaged parts. Inspect and replace damaged parts.

MAIN GEAR ACTUATOR REMOVAL. (See figure 3-24.)
a. Place aircraft on jacks.
b. Depressurize hydraulic system.
c. Lower main gear inboard door. (Refer to INBOARD GEAR DOOR REMOVAL, this section.)
d. Note position of hydraulic hoses at retract port and mark clocking of fitting on actuator.
e. Disconnect hydraulic hoses. Cap hoses and plug actuator ports.
f. Remove actuator downlock switch and electrical wiring clamps.
g. Remove attaching parts and remove actuator from aircraft. Switch ball (figure 3-29) will be released by removal of downlock switch. As actuator is being removed from the aircraft, rotate actuator to remove switch ball.

MAIN GEAR ACTUATOR DISASSEMBLY. (See figure 3-29.) During disassembly, tag and keep all parts together for assembly into the same unit. Do not remove actuator nameplate unless it is damaged.

CAUTION

The actuator is spring-loaded to 310 pounds. Use special precaution when unscrewing cylinder assembly from housing to prevent either part from springing out of control. Otherwise bodily injury may result.

a. Remove lockscrew and, while taking care to control the actuator spring load, slowly unscrew cylinder assembly and remove housing.
b. Remove nut and bolt attaching rod end to piston and remove rod end from piston.
c. Slide piston, inner piston, laminated shim, drive spring, plunger, and downlock ball housing from actuator housing. Retrieve the downlock balls which will fall free as piston is removed.
d. Remove retaining ring and rod scraper from actuator housing. Remove and discard all O-rings, D-ring, backup rings, and felt strip.
e. Bearing and lubricators are pressed into place. Bearings are staked when installed. Remove only if replacement is required.

WARNING

Use cleaning solvents only in well-ventilated areas. Avoid inhaling solvent vapors. Keep solvent and solvent containers away from spark or open flame.

f. Clean metal parts with Stoddard solvent or equivalent. Assure that no solvent is allowed to remain in internal cavities or surfaces.
g. Remove all fingerprints from machined surfaces not plated or painted using a suitable fingerprint neutralizer.
h. Dry metal parts after cleaning with clean, dry compressed air.
i. Coat internal surfaces with MIL-H-5606 hydraulic fluid.
j. Wrap cleaned parts in lint-free cloth or clean waxed paper while awaiting repair and assembly.
k. When storing unplated machine surfaced parts more than a few hours, coat with MIL-C-11796 preservative. Remove preservative prior to assembly of parts.

MAIN GEAR ACTUATOR WEAR TOLERANCE INSPECTION. (See figures 3-29 and 3-30.)

Note

Any parts which are damaged, cracked, excessively worn, scored, corroded, or do not meet inspection requirements or tolerances must be replaced.

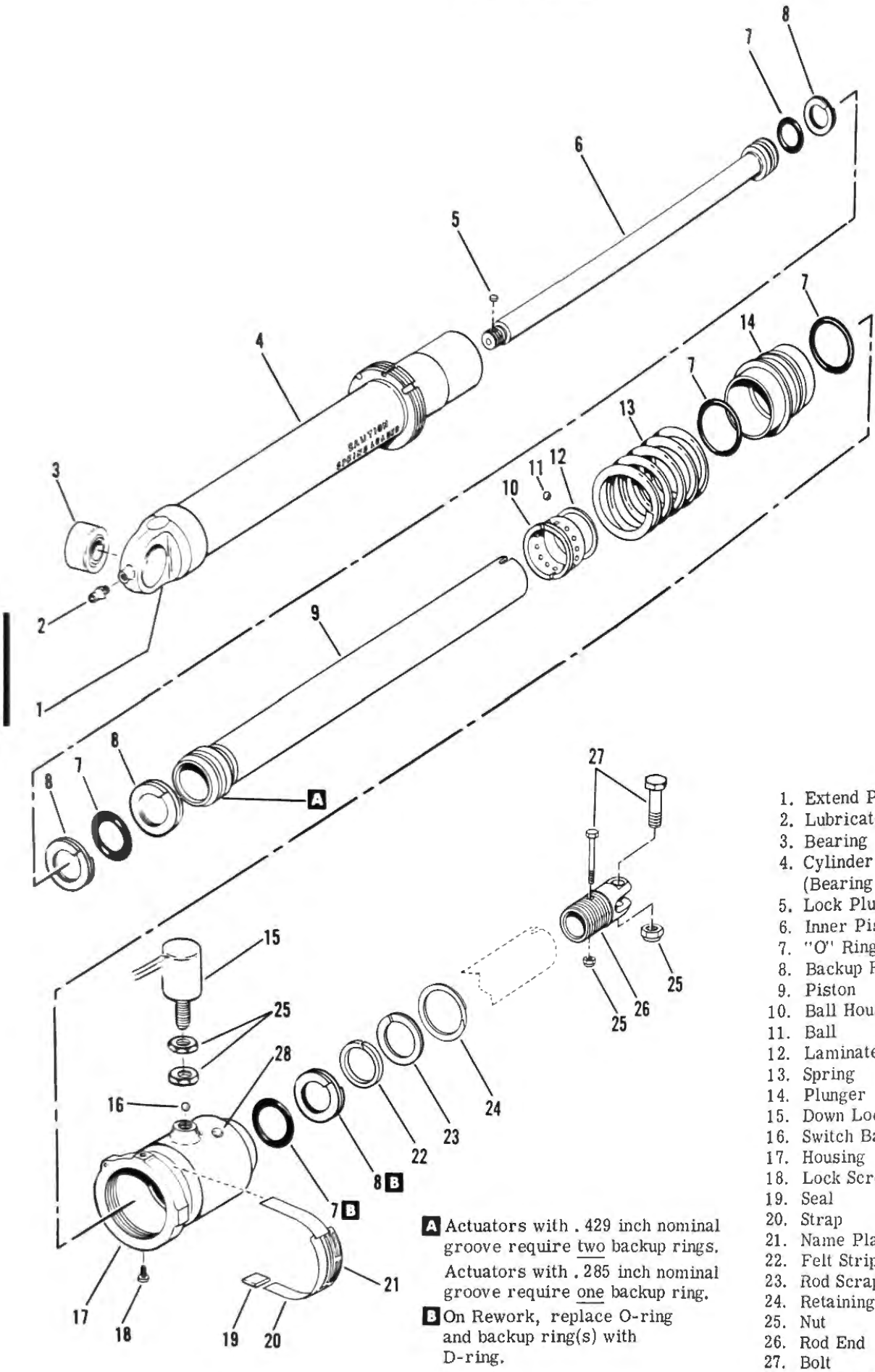

1. Extend Port
2. Lubricator
3. Bearing
4. Cylinder Assembly (Bearing Housing)
5. Lock Plug
6. Inner Piston
7. "O" Ring
8. Backup Ring
9. Piston
10. Ball Housing
11. Ball
12. Laminated Shim
13. Spring
14. Plunger
15. Down Lock Switch
16. Switch Ball
17. Housing
18. Lock Screw
19. Seal
20. Strap
21. Name Plate
22. Felt Strip
23. Rod Scraper
24. Retaining Ring
25. Nut
26. Rod End
27. Bolt
28. Retract Port

Figure 3-29. Main Gear Actuator Assembly

a. Screen drained hydraulic fluid for metal particles which may be used as an aid in determining trouble source.
b. Inspect all metal parts including welds, machined and forged parts for structural failure, nicks, burrs, corrosion, worn threads, and excessive wear.
c. Perform a magnetic-type inspection on all ferrous parts. Perform an etching or fluorescent penetrant check on all aluminum parts. After ferrous parts inspection, demagnetize to remove all metal particles.
d. Inpsect OD and ID surfaces of piston, cylinder assembly, and ID surfaces of housing assembly for galls, scratches, scoring, corrosion, or worn plating.
e. Check to assure that spring height is at least 2.44 inches when supporting a 310-pound load.
f. Buff out minor scratches in piston, cylinder assembly, inner piston, downlock ball housing, plunger, or housing assembly. Do not create low spots by excessive buffing or polishing. Use oil stone to remove scratches and polish with crocus cloth. Check tolerances after polishing.

MAIN GEAR ACTUATOR ASSEMBLY. (See figure 3-29.) Install new O-rings, D-rings, backup rings, and felt strip at each assembly. Immerse the above items in MIL-H-5606 hydraulic fluid immediately prior to installation. All O-ring and D-ring grooves must be free from gouges, scratches, and burrs. Assure all items are thoroughly clean prior to installation.
a. Install new lubricator and/or bearing if removed during disassembly. If new bearing is to be installed, install as follows:

Note

Maximum tolerance between the new bearing and the bearing housing is 0.004. If the tolerance is greater, replace bearing housing.

1. Clean bearing and bearing housing using trichlorethylene solvent. The bearing and bearing housing must be clean of all traces of oil, dust, condensation or other contaminants.
2. Apply Locquic primer (Grade T) to the mating surfaces of the bearing outer race and to the actuator bearing housing and wipe off while still wet. Reapply primer to bearing and bearing housing and allow to dry until the primer odor is no longer present.
3. Apply an even coat of Loctite compound no. 35 evenly to the mating surfaces of the bearing and bearing housing. Excessive compound may be removed using a rag moistened in trichlorethylene.
4. Press the bearing into the actuator bearing housing and keep aligned until Loctite cures. Cure time is 20 to 30 minutes. Do not stake bearing.

b. Install D-ring and felt strip inside actuator housing assembly.
c. Install O-ring inside plunger and O-ring on outside of plunger.
d. Install O-ring and backup ring on piston and inner piston.
e. Assemble downlock ball housing, shoulder first, on piston.
f. Install plunger in actuator housing, assuring it is bottomed.
g. Assemble laminated shim on piston and lubricate downlock ball housing holes with vaseline.
h. Install balls in downlock ball housing.
i. With actuator housing assembly held vertically, slide piston with laminated shim, balls, and downlock ball housing into actuator housing assembly and plunger.
j. With actuator housing assembly held securely, pull piston to the extended position. Pulling the piston to extended position will seat balls inside downlock ball housing into groove just below piston head and will hold piston in extended position.
k. Place spring inside housing assembly and bottom against shoulder on actuator plunger.
l. Screw inner piston into cylinder assembly.
m. Align and insert inner piston through housing assembly into piston and compress spring enough to screw cylinder into housing assembly and bottom together. With cylinder bottomed in housing assembly, the extend and retract ports must be aligned on same plane within 5° and lockscrew slot in cylinder lined up with lockscrew hole in housing assembly.
n. Install lockscrew in housing assembly securing housing assembly and cylinder as a unit.

OUTSIDE DIAMETER			
Nomenclature	Original O. D. (Inches)	Surface Finish (RMS)	Minimum O. D. (Inches)
Cylinder	2.436 / 2.434	16	2.433
Inner Piston	1.489 / 1.487	63	1.484
Piston (head)	2.243 / 2.241	63	2.236
Piston (rod)	1.873 / 1.871	16	1.870
Piston	1.873 / 1.871	32	1.870
Ball Housing	2.217 / 2.215	125	2.213
Plunger	2.811 / 2.809	32	2.807

INSIDE DIAMETER				TOTAL CLEARANCE DIAMETER	
Nomenclature	Original Hole Size I. D. (In.)	Surface Finish (RMS)	Maximum Hole Size I. D. (In.)	Original Inches	Maximum Wear (In.)
Plunger	2.440 / 2.438	32	2.442	0.006 / 0.002	0.009
Plunger	2.224 / 2.219	125	2.226	0.009 / 0.002	0.013
Cylinder	2.247 / 2.245	16	2.252	0.006 / 0.002	0.016
Housing	1.878 / 1.876	32	1.885	0.007 / 0.003	0.015
Housing	2.815 / 2.813	32	2.819	0.006 / 0.002	0.012
Piston	1.493 / 1.491	32	1.496	0.006 / 0.002	0.012
Ball Housing	1.877 / 1.875	125	1.880	0.006 / 0.002	0.010

Figure 3-30. Main Gear Actuator - Wear Tolerances (Sheet 1 of 2)

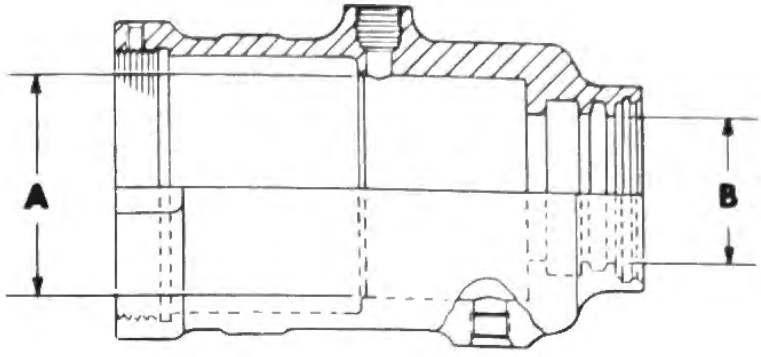

Housing

A. 2.813 - 2.815, Surface Finish (RMS 32)
B. 1.876 - 1.878, Surface Finish (RMS 32)

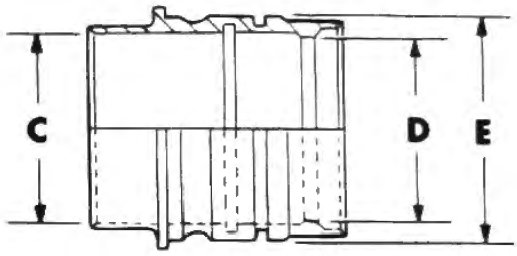

Plunger

C. 2.438 - 2.440, Surface Finish (RMS 32)
D. 2.219 - 2.224, Surface Finish (RMS 125)
E. 2.809 - 2.811, Surface Finish (RMS 32)

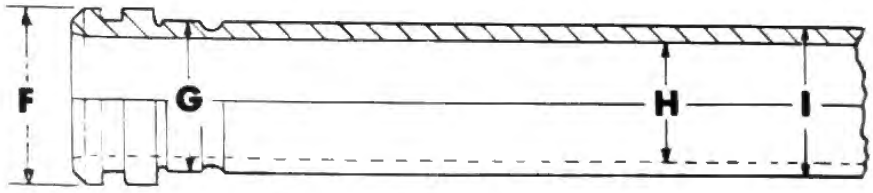

Piston

F. 2.241 - 2.243, Surface Finish (RMS 63)
G. 1.871 - 1.873, Surface Finish (RMS 32)
H. 1.491 - 1.493, Surface Finish (RMS 32)
I. 1.871 - 1.873, Surface Finish (RMS 16)

Note

See Sheet 1 for wear tolerances.

Figure 3-30. Main Gear Actuator - Wear Tolerances (Sheet 2 of 2)

o. Install rod scraper on piston and secure in housing assembly with retainer ring.
p. Install rod end in piston and secure with attaching parts.
q. Refinish all exterior painted surfaces, as required, with one coat of wash primer, one coat of MIL-L-8585 zinc chromate primer, and one coat of MIL-L-7178 aluminized lacquer.

MAIN GEAR ACTUATOR - FUNCTIONAL TEST.
a. After complete assembly, place actuator in a horizontal position with extend port up.
b. Fill through extend port with clean MIL-H-5606 hydraulic fluid, bleeding unit of all air.
c. Place actuator in a horizontal fully extended position.
d. Connect a hydraulic test bench capable of at least 3000 psi to extend port with retract port open.
e. Pressurize to 2250 psi for 2 minutes, then drop pressure to 5 psi for an additional 2 minutes. There shall be no leakage from the open retract port during this period.
f. Disconnect extend port and connect hydraulic test bench to retract port with extend port open.
g. Pressurize to 3000 psi for 2 minutes, then drop pressure to 5 psi for an additional 2 minutes. There shall be no leakage from the open extend port during this period.

MAIN GEAR ACTUATOR - INSTALLATION. (See figure 3-24.)
a. Install actuator on attaching pillar and landing gear and secure with attaching parts.
b. Lubricate switch actuating ball with LPS3 (manufactured by LPS Research Laboratories, Inc., Los Angeles, Calif.) Install switch actuating ball, downlock switch, and electrical wiring clamps. Adjust downlock switch. (Refer to Main Gear Down and Locked Switch Adjustment, this section.)
c. Remove plugs and caps and reconnect hydraulic hoses to actuators.
d. Reconnect main gear inboard door actuator to door and secure with attaching parts.
e. Pressurize hydraulic system, cycle landing gear system, and check for proper operation.
f. Remove aircraft from jacks.
g. With aircraft fully fueled and resting on landing gear the main gear struts shall be perpendicular to the ground line within 0° 15'.

MAIN GEAR INBOARD DOOR UPLATCH MECHANISM. (See figure 3-31.) An inboard door uplatch mechanism retains each inboard door in the up and locked position. The mechanism consists of a roller and a spring-loaded hydraulic uplatch actuator. Actuator spring tension maintains the roller in the locked position. As the door closes, the cam surface of the uplatch hook on the door contacts the uplatch roller and compresses the spring. To open the door, hydraulic pressure is applied to the uplatch actuator. Hydraulic pressure overcomes the spring tension, retracting the actuator and allowing the door to open. An adjustable door up switch is mounted adjacent to the hook.

MAIN GEAR INBOARD DOOR UPLATCH ACTUATOR - REMOVAL. (See figure 3-31.)
a. Place the aircraft on jacks.
b. Depressurize the hydraulic system. (Refer to HYDRAULIC SYSTEM, this section.)
c. Disconnect hydraulic hose from uplatch actuator. Cap and plug all exposed hydraulic fittings.
d. Remove attaching parts and uplatch actuator from aircraft.

MAIN GEAR INBOARD DOOR UPLATCH ACTUATOR - DISASSEMBLY.
a. Refer to NOSE GEAR UPLATCH ACTUATOR - DISASSEMBLY, this section.

MAIN GEAR INBOARD DOOR UPLATCH ACTUATOR - REASSEMBLY.
a. Refer to NOSE GEAR UPLATCH ACTUATOR - REASSEMBLY, this section.

MAIN GEAR INBOARD DOOR UPLATCH ACTUATOR - INSTALLATION. (See figure 3-31.)
a. Install uplatch actuator in aircraft and secure with attaching parts.
b. Reconnect hydraulic hose and adjust uplatch mechanism. (Refer to MAIN GEAR INBOARD DOOR UPLATCH - ADJUSTMENT, this section.)
c. Remove the aircraft from jacks.

MAIN GEAR INBOARD DOOR UPLATCH - ADJUSTMENT. (See figure 3-31.)
a. Place aircraft on jacks and pressurize hydraulic system.
b. With outboard doors disconnected and gear fully retracted, uplatch roller shall be 0.10 (±0.03) inch from top of door hook.
c. Adjust rod end of uplatch actuator until uplatch roller contacts door hook, then back rod end one-half turn to next terminal index and lockwire.
d. Release hydraulic pressure so that door hook hangs on uplatch roller.
e. Attach an ohmmeter to No. 1 and 3 wires of door up switch.
f. Adjust upper jamnut until switch actuation is indicated and run up one turn.
g. Tighten lower jamnut and lockwire per double twist method.
h. Remove the aircraft from jacks.

MAIN GEAR DOORS. Each main gear is enclosed by an inboard and outboard door. The inboard door is hydraulically operated. The outboard door is mechanically connected to the landing gear strut by an adjustable link. The doors are hinged from the structure by continuous-type hinges.
a. Removal of Inboard Gear Door. (See figure 3-32.)
1. Place aircraft on jacks.
2. Depressurize hydraulic system. (Refer to HYDRAULIC SYSTEM, this section.)
3. Using a screwdriver to override the uplatch actuator, release uplatch hook from roller.

Note

The brakes must be pumped during manual lowering of inboard gear door to prevent

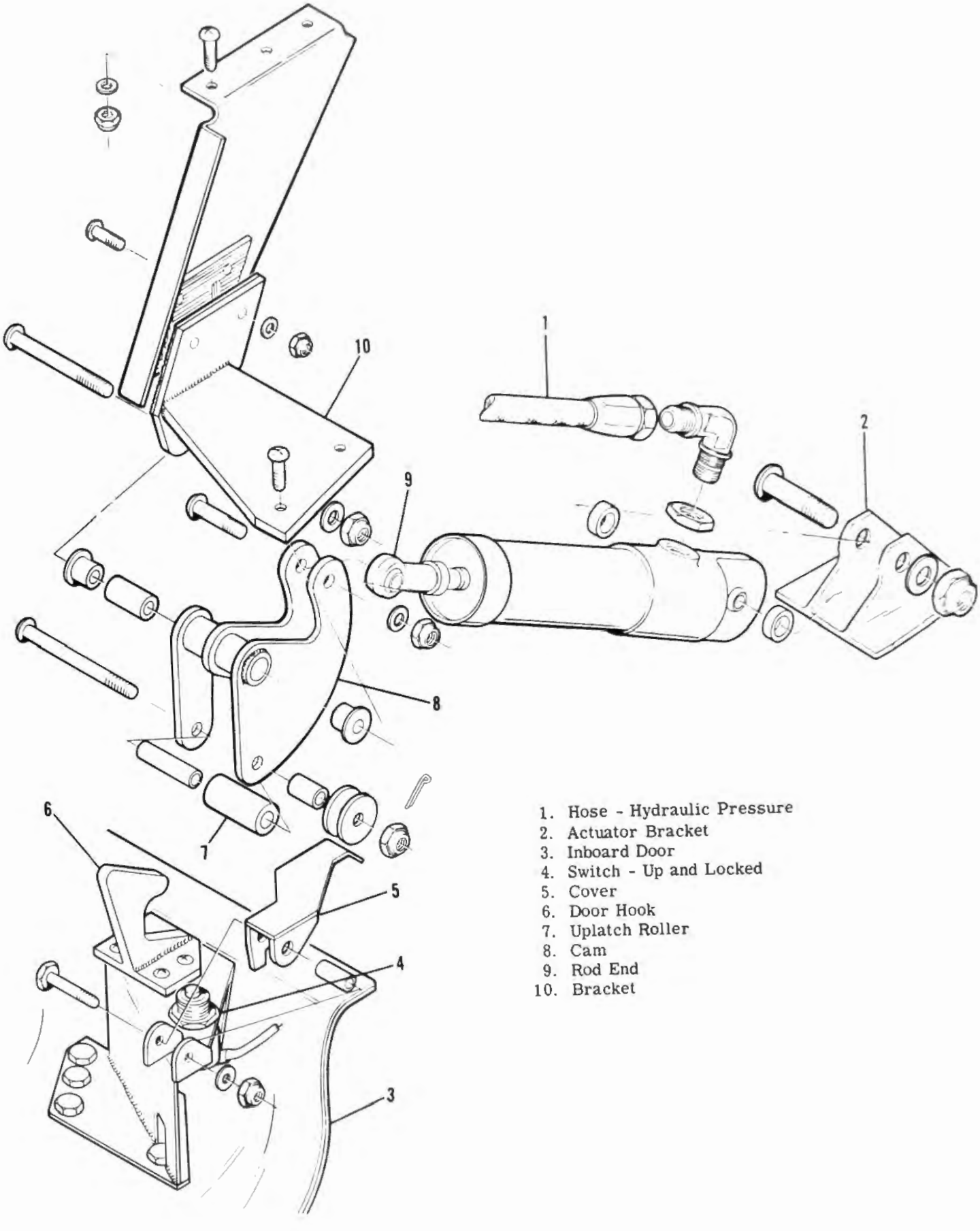

1. Hose - Hydraulic Pressure
2. Actuator Bracket
3. Inboard Door
4. Switch - Up and Locked
5. Cover
6. Door Hook
7. Uplatch Roller
8. Cam
9. Rod End
10. Bracket

Figure 3-31. Main Gear Inboard Door Uplatch

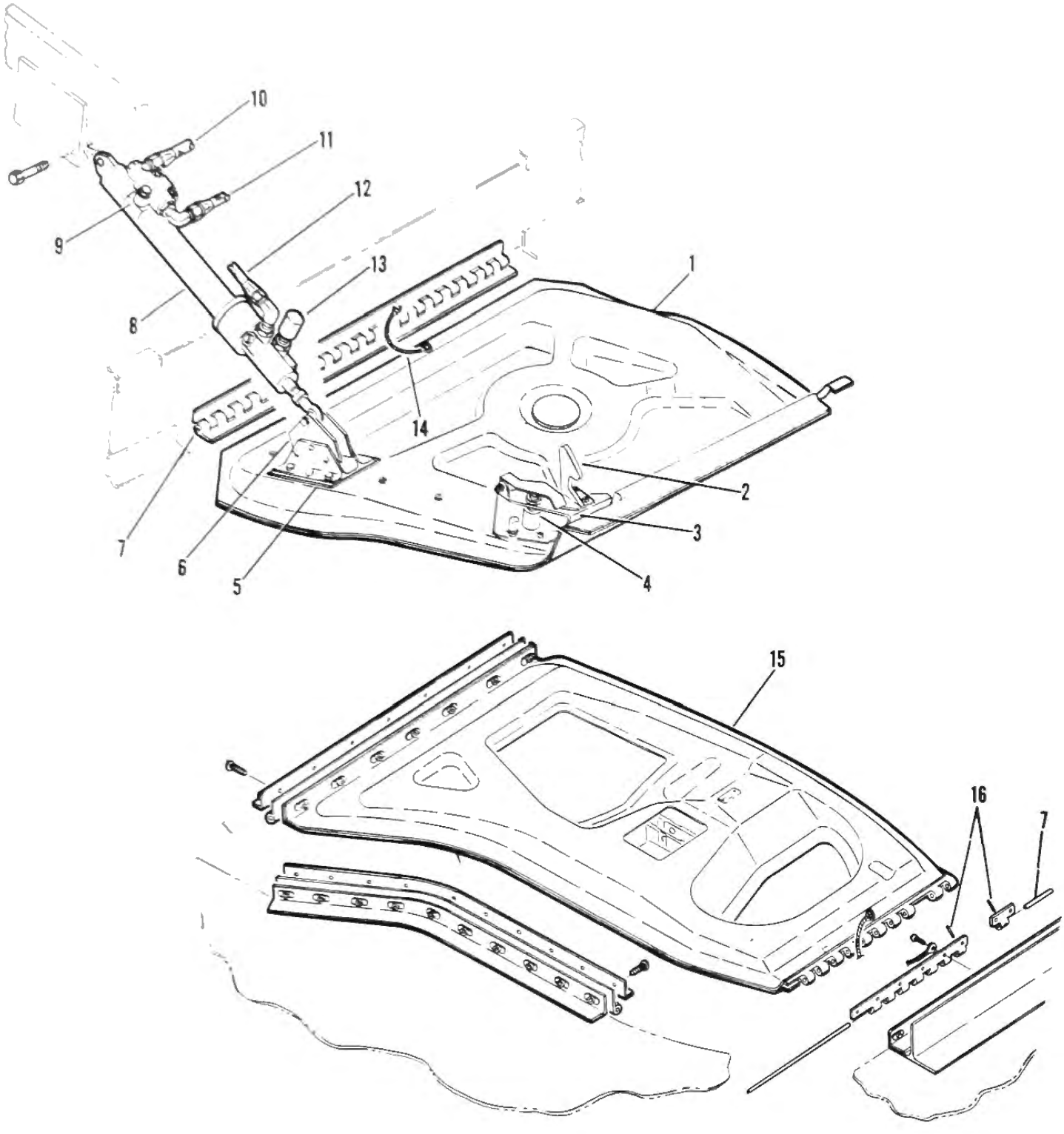

1. Main Gear Inboard Door
2. Uplatch Hook
3. Switch Bracket Assembly
4. Switch - Door Up
5. Actuator Attach Bracket
6. Actuator Adjust Plate
7. Hinge
8. Door Actuator
9. Shuttle Valve
10. Hydraulic Pressure - Extend
11. Emergency Air Pressure - Extend
12. Hydraulic Pressure - Retract
13. [A] Switch - Door Down
14. Bonding Jumper
15. Main Gear Outboard Door
16. Spring Pin

[A] Aircraft 23-080 thru 23-099.

Figure 3-32. Main Gear Inboard and Outboard Door Installation

door actuator seal damage and possible nose gear vacuuming to up cycle.

4. To lower the main gear inboard door, station a man at the door and a man in the cockpit to operate brakes, then proceed as follows:
(a) With one man pumping brakes, the man stationed at the gear door must pull the door to the down position.

WARNING

Failure to disconnect batteries could result in bodily injury while working in wheel well area if electrical power is inadvertently applied to landing gear system.

5. Remove safety wire and disconnect battery quick-disconnects.
6. Disconnect door actuator from inboard door.
7. Disconnect bonding jumper from door.

Note

Tie electrical wiring and switch to structure out of the immediate work area.

8. Remove uplatch switch and electrical wiring clamps from door.
9. Remove hinge pin and door from aircraft.
10. Remove hardware from door for installation on new door.

b. Installation of Inboard Gear Door. (See figure 3-32.)
1. Reinstall switch bracket assembly (3) and actuator attach bracket (5).
2. Temporarily install door on aircraft and mark trim contour.
3. Remove door and rough trim along contour.
4. Reinstall door and final trim on aircraft.
5. Reinstall door up switch (4) electrical wiring, and wiring clamps on door.
6. Connect bonding jumper and actuator to door.
7. Connect batteries and safety wire.
8. Adjust inboard door uplatch. (Refer to MAIN INBOARD DOOR UPLATCH - ADJUSTMENT, this section.)
9. Cycle gear and check door for proper alignment.

c. Removal of Outboard Gear Door. (See figure 3-32.)
1. Place aircraft on jacks.
2. Disconnect door closure link assembly from door.
3. Raise main gear.

WARNING

Failure to disconnect batteries could result in bodily injury while working in wheel well area if electrical power is inadvertently applied to landing gear system.

4. Remove safety wire and disconnect battery quick-disconnects.
5. Remove door hinge and bonding jumper from wing structure.
6. Remove hinge pin, hinge half, and bonding jumper from door.

d. Installation of Outboard Gear Door. (See figure 3-32.)
1. Install existing hinge half on new door using hinge pin.
2. Temporarily install door on aircraft and mark trim contour.
3. Remove door, rough trim to fit, and attach bonding jumper.
4. Reinstall door and final trim.
5. Connect batteries and safety wire.
6. Lower main gear.
7. Install door closure linkage to door.
8. Cycle gear and check door for proper alignment and adjustment.

MAIN GEAR INBOARD DOOR ACTUATORS. Each main gear inboard door is opened and closed by a hydraulic actuator which is attached to the fuselage structure and to a fitting on the door. During the landing gear up and down cycle, hydraulic pressure through the landing gear selector valve opens the doors for main landing gear extension or retraction.

MAIN GEAR INBOARD DOOR ACTUATOR - REMOVAL. (See figure 3-32.)
a. Place the aircraft on jacks.
b. Depressurize the hydraulic system. (Refer to HYDRAULIC SYSTEM, this section.)
c. Lower inboard gear door. (Refer to INBOARD GEAR DOOR - REMOVAL, this section.)
d. Remove attaching parts and actuator from inboard door.
e. Disconnect hydraulic hoses from actuator. Cap and plug all exposed hydraulic fittings.
f. Remove attaching parts and actuator from the aircraft.

MAIN GEAR INBOARD DOOR ACTUATOR - DISASSEMBLY. (See figure 3-33.)
a. Cut lockwire and remove key lock (2), locknut (3) and rod end (1) from piston rod (21).
b. Loosen spanner nut (14) and unscrew cap (13) from body (30). Remove piston rod (21) from body (30).
c. Remove all O-rings and backup rings from body (30), piston head (25), and cap (13).
d. Unscrew piston head (25) from piston rod (21). Remove O-rings and backup rings from piston rod (21). Retain spacer (24) for reinstallation.
e. Remove plug (31) from cap (13) to gain access to actuating pin (33). Insert a small screwdriver through hole in cap (13) and remove actuating pin (33) from piston (8).
f. On [A], remove filter plug (12) from cap (13).

[A] Aircraft 23-003 thru 23-079.

g. [B] Insert screwdriver through hole into slot in plug (9). Remove plug (9), stem (10), and actuating ball (11) from cap (13).

h. Slowly remove plug (4) from cap (13) releasing tension on spring (6). Remove spring (6) and piston (8) from cap (13). Remove O-rings from piston (8) and plug (4).

i. Clean all parts in Stoddard solvent or equivalent and dry with clean, dry compressed air.

j. Inspect all parts for nicks, scratches, or excessive wear. Replace defective parts.

MAIN GEAR INBOARD DOOR ACTUATOR - REASSEMBLY. (See figure 3-33.)

a. Immerse all O-rings and backup rings in MIL-H-5606 hydraulic fluid prior to installation.

b. Install O-rings (7) on piston (8) and insert piston (8) in cap (13) as far as possible. Reinstall actuating pin (33) in piston (8). Install O-ring (32) on plug (31) and install plug in cap (13).

c. Install O-ring (5) on plug (4) and reinstall spring (6) and plug (4) in cap (13).

d. [B] Insert actuating ball (11), stem (10), and plug (9) in cap (13). Insert screwdriver into slot in plug (9) and tighten.

e. On [A], reinstall filter plug (12).

f. Assemble O-ring (23), spacer (24), and backup rings (22) on piston rod (21) and screw piston head (25) on piston rod (21).

g. Assemble O-ring (29) and backup rings (28) in body (30). Assemble O-ring (27) and backup rings (26) on piston head (25). Insert piston rod (21) (with piston head attached) in body (30).

h. Assemble O-ring (16), backup rings (15), and felt wiper (17) in cap (13). Slip cap (13) over piston rod (21) and screw cap (13) on body (30) as far as possible. Tighten spanner nut (14) against cap (13) and lockwire.

i. Assemble scraper (18), washer (19), and retainer ring (20) in end of cap (13). Reinstall rod end (1), locknut (3), and key lock (2) on piston rod (21).

j. With piston rod fully bottomed, adjust rod end (1) for 17.550 inches between centerlines of actuator bearing and rod end bearing and lockwire.

k. Connect a hydraulic pressure source to the extend and retract ports of the actuator. Pressure check at 2250 psi for 3 minutes in both the extend and retract positions. Leakage rate should not exceed one drop in the 3-minute period.

[A] Aircraft 23-003 thru 23-079.
[B] Aircraft 23-080 thru 23-099.

1. Rod End
2. Key Lock
3. Locknut
4. Plug
5. O-Ring
6. Spring
7. O-Ring
8. Piston
9. Plug
10. Stem
11. Actuating Ball
12. Filter Plug
13. Cap
14. Spanner Nut
15. Backup Ring
16. O-Ring
17. Felt Wiper
18. Scraper
19. Washer
20. Retainer Ring
21. Piston Rod
22. Backup Ring
23. O-Ring
24. Spacer
25. Piston Head
26. Backup Ring
27. O-Ring
28. Backup Ring
29. O-Ring
30. Body
31. Plug
32. O-Ring
33. Actuating Pin

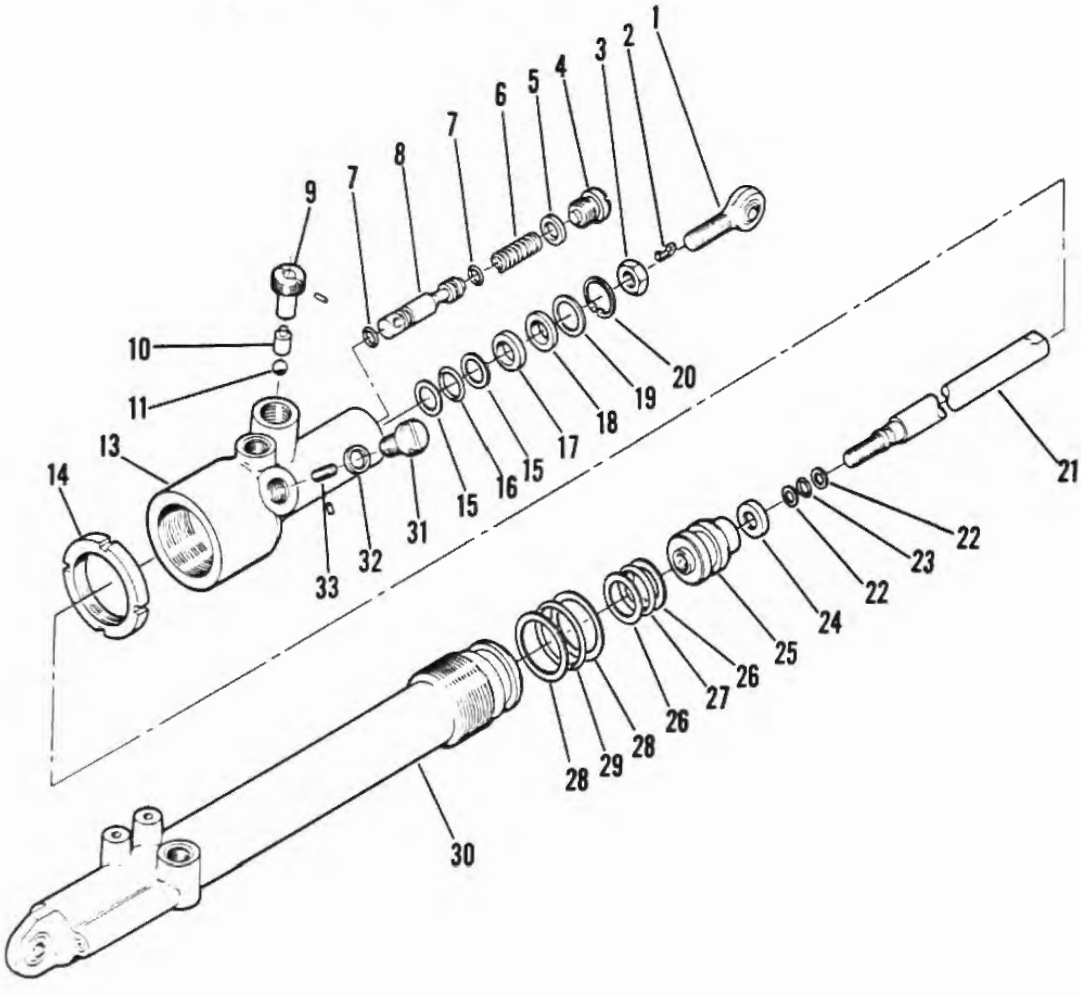

Figure 3-33. Main Gear Inboard Door Actuator Assembly

MAIN GEAR INBOARD DOOR ACTUATOR - INSTALLATION. (See figure 3-32.)

a. Attach actuator to aircraft structure and secure with attaching parts.

b. [A] Install DOOR DOWN switch and adjust. (Refer to DOOR DOWN SWITCH - ADJUSTMENT, this section.)

c. Attach actuator to inboard door and secure with attaching parts.

d. Reconnect hydraulic hoses to actuator. Pressurize hydraulic system and cycle landing gear to check operation of doors.

e. Remove the aircraft from jacks.

BRAKE SYSTEM. (See figure 3-34.) The primary brake system consists of four power brake units, four shuttle valves and two parking brake valves. The power brake units are located directly below the rudder pedals. Two of the shuttle valves are located under the right floorboards between frames 9 and 10 and the other two are located, one on each main gear strut. On [B] the parking brake valves are located under the left floorboards between frames 9 and 10. On [C] the parking brake valves are located under the right floorboards between frames 10 and 11. Depressing the brake pedal directs hydraulic fluid from the nose gear down line through the power brake valve, and shuttle valves to the corresponding brake. An integral braking system is incorporated in the aircraft to prevent the wheels from spinning as the gear is retracted. On retraction, the return landing gear hydraulic fluid passes through a restrictor in the return line to the reservoir. This return line is also common to the brakes, thus creating approximately 100 to 180 psi back pressure in the brake system which snubs the wheels during the gear retraction cycle. After the gear has retracted, the back pressure returns to normal and the brakes are released.

BRAKE SYSTEM - TROUBLE SHOOTING.

TROUBLE	PROBABLE CAUSE	CORRECTION
NO BRAKE PRESSURE.	No hydraulic system pressure.	Repair hydraulic system.
	Landing gear selector set to UP.	Set selector to DOWN.
SPONGY BRAKES.	Air trapped in system.	Bleed brakes.
	Swollen hose.	Replace hose.
BRAKES FAIL TO HOLD.	Brake linings worn excessively.	Replace linings.
	New linings just installed and not broken in.	Taxi aircraft and apply brakes several times to condition brakes.
	Brake pedal linkage not rigged properly.	Rerig rudder pedal system and brake pedal linkage.
PARKING BRAKE WILL NOT RELEASE.	Brakes have been set excessively hard.	Build up full system pressure (1500 psi). Hold park brake control "OFF." Depress pedals until fluid is hard to pass through brake valves. Release pedals very slowly. If brakes still do not release, loosen brake line at the wheel and allow fluid to escape. Retighten line and check for normal operation.
BRAKES DRAG.	Clogged hydraulic system filter.	Replace filter element.
BRAKES WILL NOT RELEASE.	Defective parking brake valves.	Repair or replace valves.

[A] Aircraft 23-080 thru 23-099.
[B] Aircraft 23-003 thru 23-049
[C] Aircraft 23-050 thru 23-099

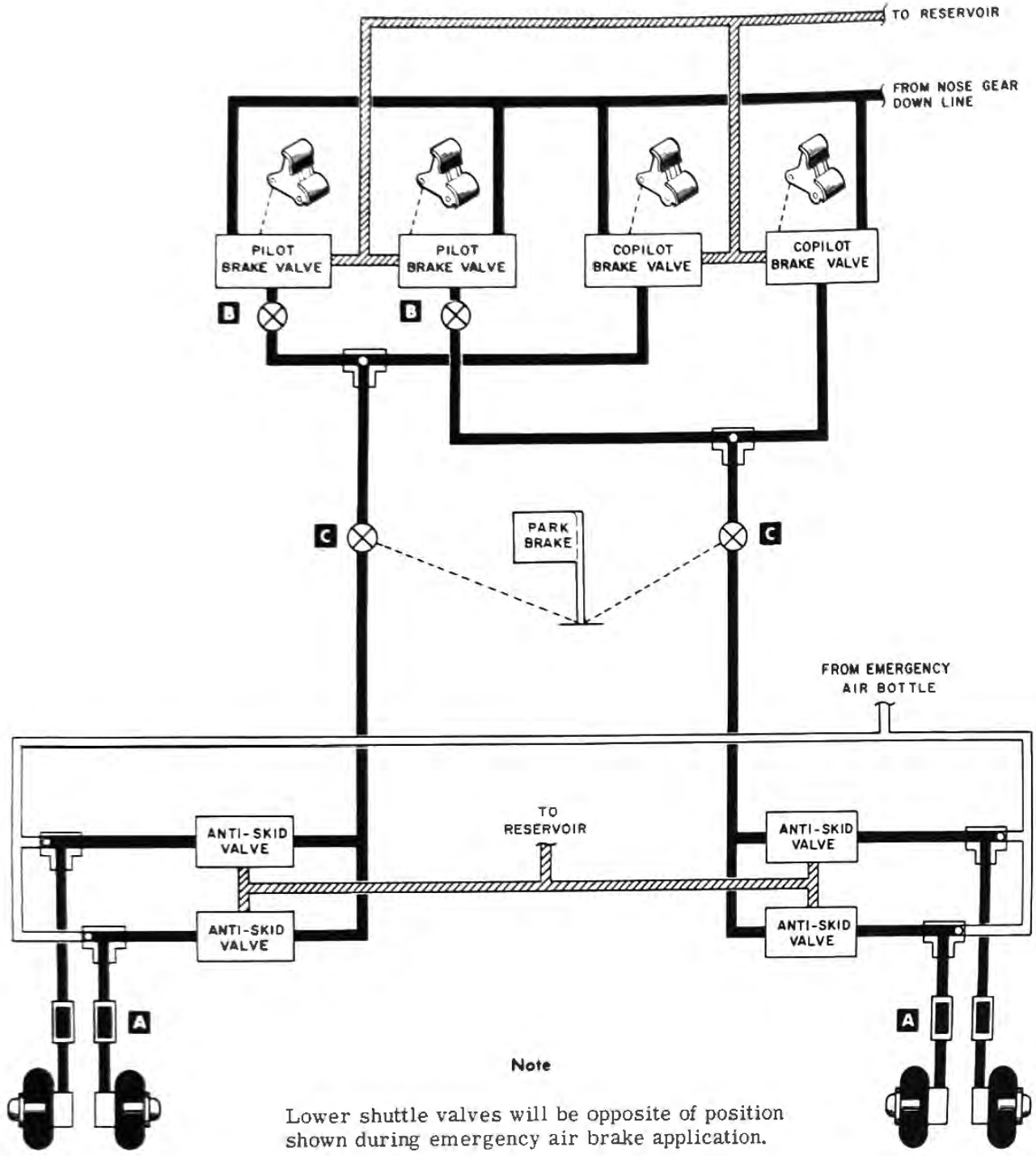

A Aircraft 23-090 thru 23-099 and aircraft modified by SK23-137.

B Aircraft 23-003 thru 23-049.

C Aircraft 23-050 thru 23-099.

Figure 3-34. Brake System Schematic

ANTI-SKID BRAKE SYSTEM. (See figure 3-35.) The anti-skid braking system consists of four solenoid-operated anti-skid valves, one installed in each brake pressure line, and four (DC) generators, two mounted inside the axle of each main landing gear wheel. The generators are driven by a drive cap attached to the wheel hubs. Two shuttle valves, which control normal or emergency braking, are plumbed into the system between each solenoid valve and wheel brake. An ANTI-SKID switch, located on the instrument panel, supplies electrical power to the control system circuitry. An ANTI-SKID TEST switch and light may be used to perform an electrical system check. The electrical system is monitored through an anti-skid control box located in the nose section.

a. Operation. (See Section IX for wiring diagram.) With brakes applied, during takeoff and landing run, generator rotation matches the speed of the wheels. As an impending skid condition occurs, the decelerating wheel generator voltage decreases rapidly. The anti-skid control box senses the voltage change and the solenoid valve in the affected brake pressure line(s) is energized. The energized solenoid valve is repositioned and brake pressure is shut off to the affected wheel(s) by flow of hydraulic fluid to the return line. Following brake pressure release, wheel and generator speed increase to cancel the anti-skid control box signal. The solenoid valve is then de-energized and normal brake pressure is restored to the affected wheel(s).

Note

During emergency air brake application, the anti-skid system is inoperative due to the shuttle valves changing from hydraulic to air pressure position.

ANTI-SKID GENERATOR - REMOVAL. (See figure 3-35.)

a. Remove wheels. (Refer to MAIN LANDING GEAR WHEEL - REMOVAL, this section.)

b. Remove brakes. (Refer to MULTIPLE DISC BRAKE - REMOVAL, this section.)

c. Remove sealant from anti-skid wiring at bottom of socket.

d. Remove clamps securing anti-skid wiring to main gear strut to gain slack in wires.

Note

While pulling generator, feed anti-skid wires through axle socket.

e. Remove generator and disconnect at wiring splice.

ANTI-SKID GENERATOR - INSTALLATION. (See figure 3-35.)

a. Splice generator electrical wiring to aircraft wiring at axle.

Note

While inserting generator in axle, pull excess electrical wiring out of axle socket.

b. Slide generator into axle and reseal electrical wiring at axle socket.

c. Reinstall brakes. (Refer to MULTIPLE DISC BRAKE - INSTALLATION, this section.)

d. Reinstall wheels. (Refer to MAIN LANDING GEAR WHEEL - INSTALLATION, this section.)

e. Reinstall clamps securing anti-skid electrical wiring to main landing gear strut.

f. Check anti-skid system. (Refer to ANTI-SKID SYSTEM CHECK, this section.)

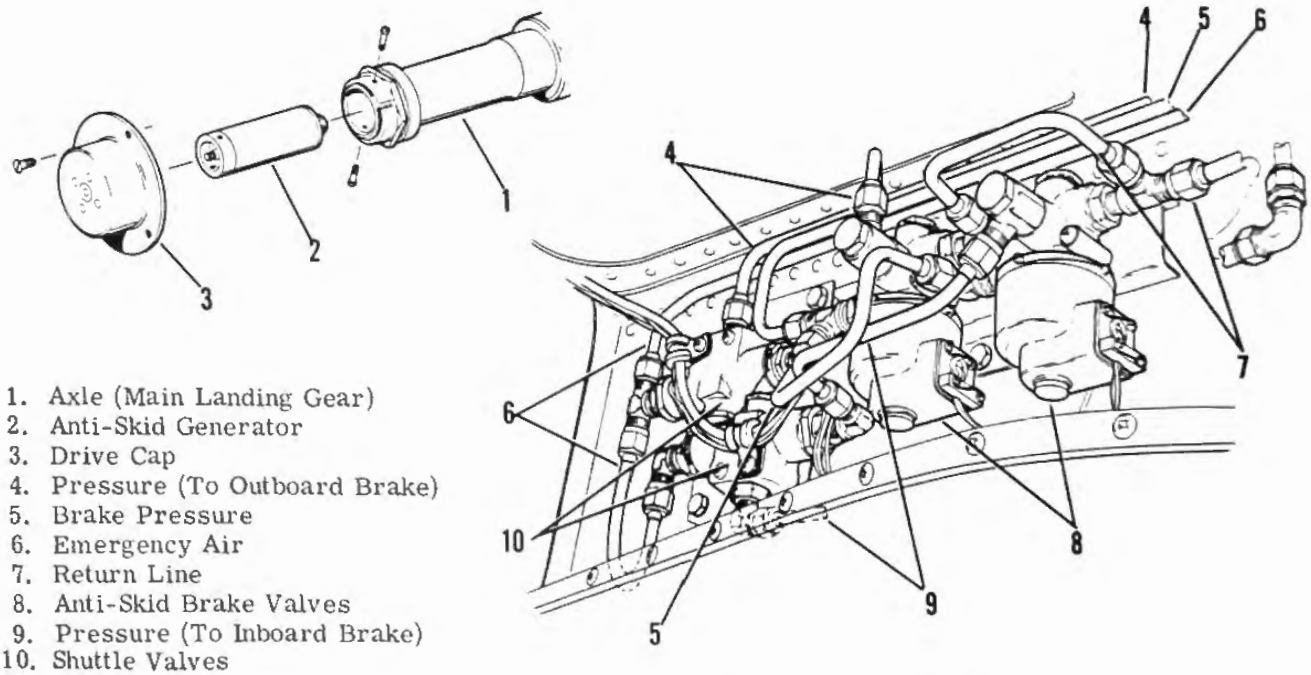

1. Axle (Main Landing Gear)
2. Anti-Skid Generator
3. Drive Cap
4. Pressure (To Outboard Brake)
5. Brake Pressure
6. Emergency Air
7. Return Line
8. Anti-Skid Brake Valves
9. Pressure (To Inboard Brake)
10. Shuttle Valves

Figure 3-35. Anti-Skid Brake System Installation

MULTIPLE DISC BRAKE [A]. (See figure 3-36.) A multiple disc, self-adjusting brake is installed on each inner wheel half of the main landing gear. The brake assembly is composed of a carrier and lining assembly, installed between two brake discs, and three segmented carrier and lining assemblies installed on the outside of each brake disc. One set of three segmented carrier and lining assemblies is attached to the piston housing and the other set to the torque plate. The torque plate is fastened to the piston housing with nuts, washers, and bolts. Automatic adjustment is provided by a set of three bushings, pin retainers, retainers, springs, and pins enclosed in a housing which is installed in wells in the outer surface of the piston housing. The automatic adjusters are held in place with retainer rings. Heat is shielded from the torque plate and piston housing by insulators. Key slots are provided in the carrier and lining assembly and brake discs to allow for shrinkage and prevent warpage.

a. Operation. Hydraulic fluid, supplied to the brake through the hydraulic pressure port, forces the pistons to press the segmented carrier and lining assembly against the brake disc, the carrier and lining assembly, and in turn against the second brake disc, segmented carrier and lining assembly and torque plate. Release of hydraulic pressure permits the automatic adjusters to retract and allow the segmented carrier and lining assembly to move away from the brake disc to maintain proper clearance.

MULTIPLE DISC BRAKE [B]. (See figure 3-36.) A hydraulically operated multi-disc self-adjusting brake assembly is installed for each main landing gear wheel assembly. Each brake is centered on the main landing gear axle by a sleeve bushing and held in its correct position by a torque plate bolted between the brake assemblies. The torque plate passes under the axle and contacts the main gear strut aft reaction pad. The rotating discs are keyed to and rotate with the wheels. A stationary pressure plate disc and back plate are positioned on the torque tube and bolted to the brake housing. The back plate and pressure plate are equipped with wear pads. Automatic adjustment is maintained by a set of four hydraulically operated pistons with interconnecting cylinders which provide brake application and clearance. Keyed slots are provided in the rotating brake discs to allow for shrinkage and to prevent warpage.

a. Operation. When hydraulic pressure is applied to the brakes, the pistons force the discs together to produce braking action. When hydraulic pressure is released, the automatic adjustment mechanism releases the pistons and provides the proper brake clearance.

MULTIPLE DISC BRAKE - REMOVAL [A]. (See figure 3-36.)

a. Place the aircraft on jacks.

b. Depressurize the hydraulic system. (Refer to HYDRAULIC SYSTEM, this section.)

c. Remove the main landing gear wheels. (Refer to MAIN LANDING GEAR WHEEL - REMOVAL, this section.)

d. Remove hydraulic brake hoses. Cap or plug all exposed hydraulic fittings.

e. Remove bolts (6) and brake assembly from axle.

MULTIPLE DISC BRAKE - DISASSEMBLY [A]. (See figure 3-36.) During disassembly, tag and keep parts together for reassembly into same unit.

a. Disassemble automatic adjuster as follows:

Note

A tool made from 1/2-inch steel rod stock, 3 inches long, with a smaller 5/16 inch turned diameter 1 inch long, having a 13/64-inch diameter hole 1 inch deep in the same end, is required to disassemble and assemble the automatic adjuster.

1. Place the 1/2-inch diameter end of tool in a drill press chuck.
2. Place brake housing (14) in the press with a support under pin head (39).
3. Lower tool against bushing (46) and push down lightly to allow for removal of retainer ring (47).
4. Remove retainer ring (47) and continue to push against bushing (46).
5. Insert small screwdriver blade through access hole in housing (42) and between retainer pin (45) and retainer (44).
6. A slight prying movement will release the grip of the retainer pin on pin (39) and allow its removal.
7. Slowly release tool pressure on bushing (46) allowing spring-loaded parts to emerge from housing (42).
8. Remove housing (42) from brake housing (14).

b. Remove nuts (34), washers (50), bolts (6) from brake assembly and disassemble brake.

c. Clean all metal parts in P-S-661 cleaning solution and dry with a lint-free cloth.

d. Wipe segmented carrier and lining assemblies (37) and carrier and lining assembly (32) clean with a lint-free cloth.

MULTIPLE DISC BRAKE - REMOVAL [B]. (See figure 3-36.)

a. Place the aircraft on jacks.

b. Depressurize the hydraulic system. (Refer to HYDRAULIC SYSTEM, this section.)

c. Remove the main landing gear wheels. (Refer to MAIN LANDING GEAR WHEEL - REMOVAL, this section.)

d. Remove hydraulic brake hoses. Cap or plug all exposed hydraulic fittings.

e. Remove self-locking nuts, washers, torque plate bolts, countersunk washers, spacers, and torque plate.

f. Remove brake assembly from axle.

[A] Aircraft 23-003 thru 23-099 except aircraft modified by SK23/24-219.
[B] Aircraft 23-003 thru 23-099 modified by SK23/24-219.

Learjet Temporary Service Manual Revision

MANUAL AFFECTED: Gates Learjet Model 23 Service Manual.

FILING INSTRUCTIONS: Insert adjacent to page 3-86 and retain until further notice.

REASON: To add self locking nut torque check.

INSTRUCTIONS: Under MULTIPLE DISC BRAKE - REMOVAL [B] ., revise step e. to read as follows:

e. Before loosening brake housing self locking nuts, use a torque wrench and tighten self locking nuts. Note torque at which nut begins to turn. Discard any nuts which turn with less than 60 inch-pounds. Remove self-locking nuts, washers, torque plate bolts, countersunk washers and spacers.

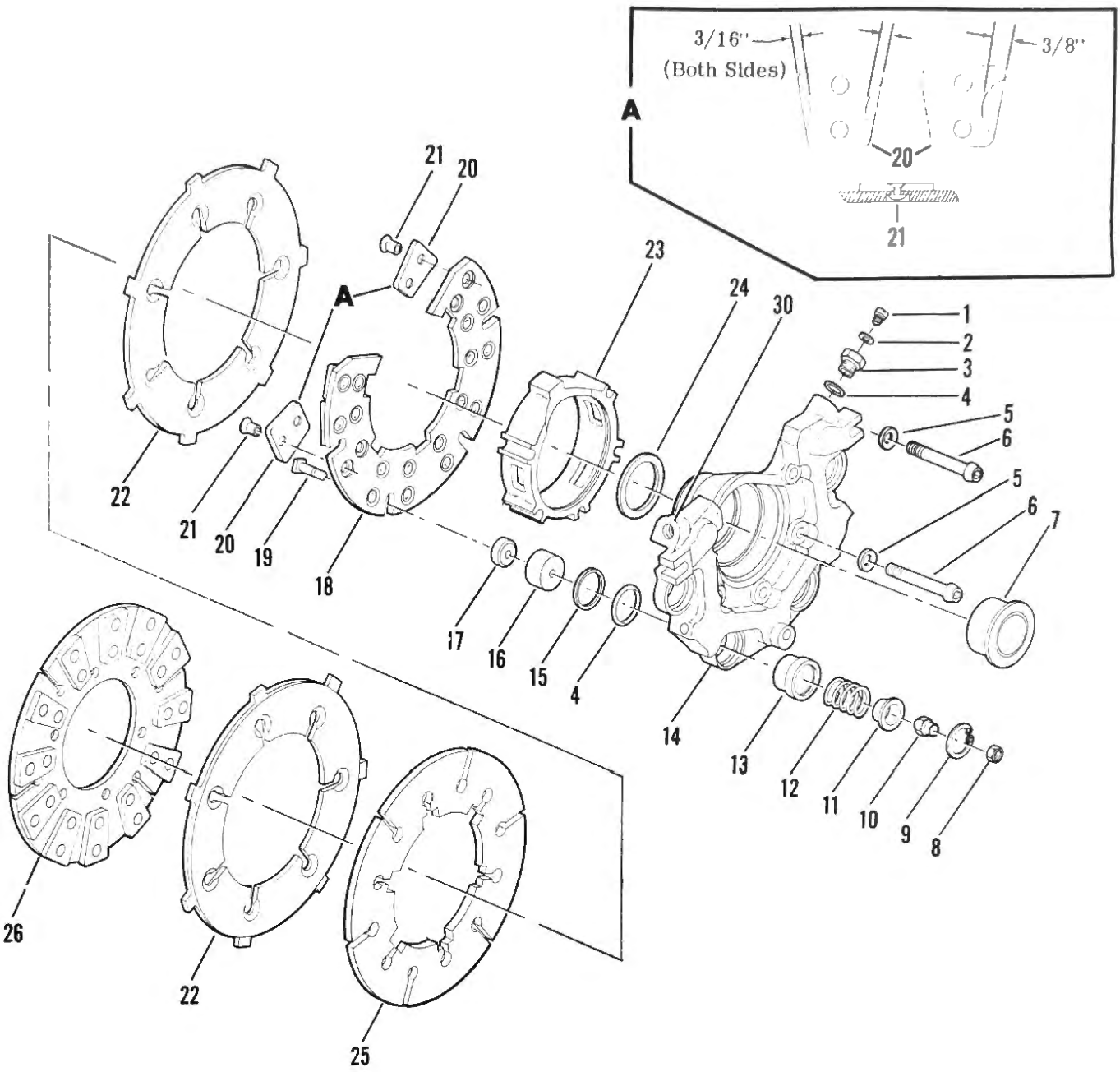

1. Bleed Screw
2. Washer
3. Adapter
4. O-Ring
5. Washer - Countersunk
6. Bolt
7. Sleeve Bushing
8. Nut - Adjusting
9. Retainer Ring
10. Grip Assembly
11. Spring Holder - Inner
12. Spring
13. Spring Holder - Outer
14. Brake Housing
15. Retainer
16. Piston
17. Insulator
18. Pressure Plate
19. Return Pin
20. Wear Pad
21. Rivet
22. Rotating Disc
23. Torque Tube
24. Spacer Housing
25. Stationary Disc
26. Back Plate
27. Spacer
28. Nut - Self-Locking
29. Torque Plate
30. Pressure Port
31. Seal
32. Carrier and Lining Assembly
33. Torque Plate
34. Nut
35. Sector
36. Insulator
37. Segmented Carrier and Lining Assembly
38. Brake Disc
39. Pin
40. Insulator - Piston
41. Piston
42. Housing
43. Spring
44. Retainer
45. Retainer Pin
46. Bushing
47. Retainer Ring
48. Insert - Screw Thread
49. Insert - Key Way
50. Washer

Aircraft 23-003 thru 23-099 modified by SK23/24-219.

Figure 3-36. Multiple Disc Brake Assembly (Sheet 1 of 3)

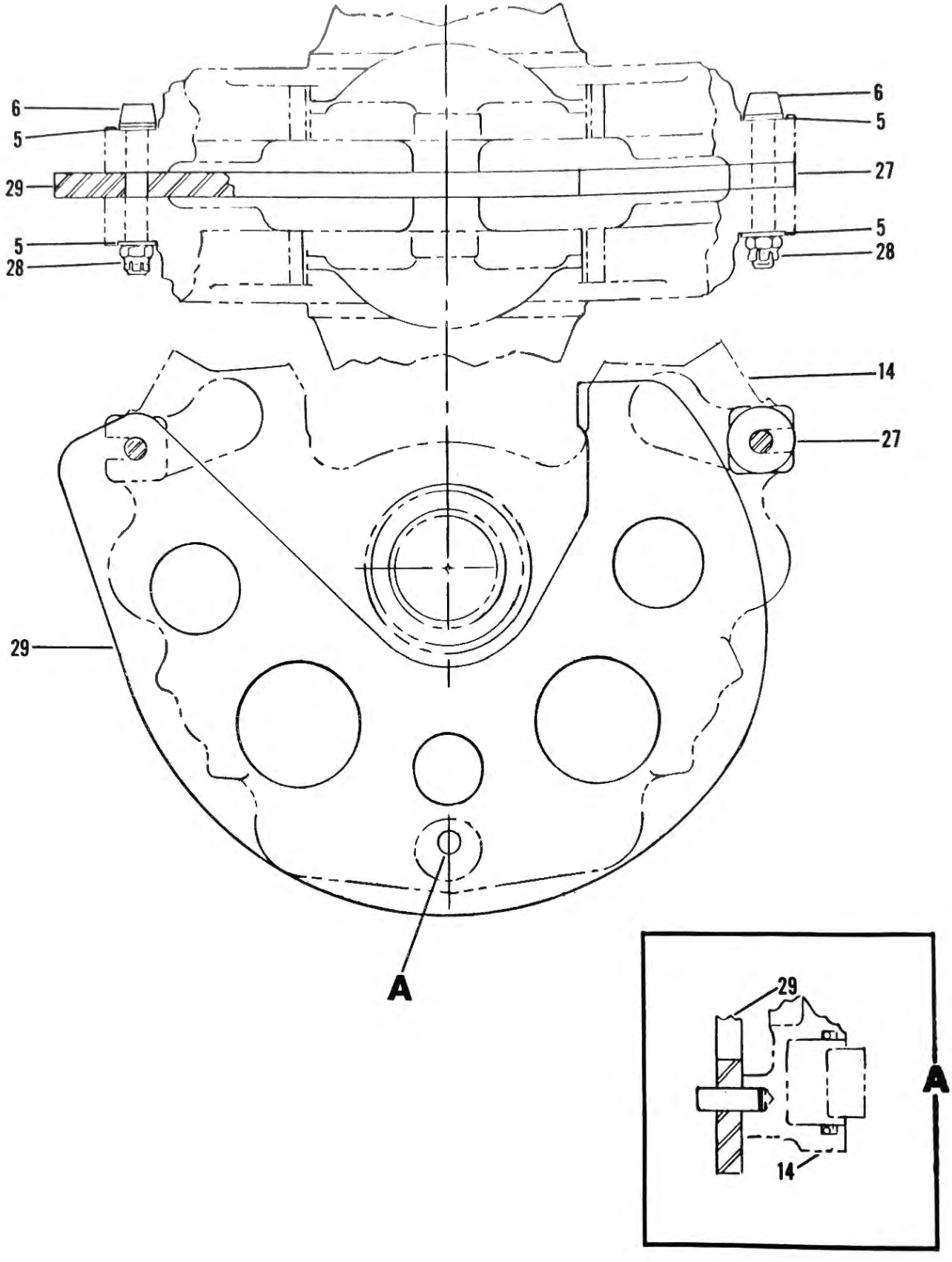

Figure 3-36. Multiple Disc Brake Assembly (Sheet 2 of 3)

Learjet Temporary Service Manual Revision

MANUAL AFFECTED: Gates Learjet Model 23 Service Manual.

FILING INSTRUCTIONS: Insert adjacent to page 3-89.

REASON: To add self locking nut torque check.

INSTRUCTIONS: Under MULTIPLE DISC BRAKE - DISASSEMBLY , revise step c. to read as follows:

c. Before loosening adjusting nut, use a torque wrench and tighten nuts. Note torque at which nut begins to turn. Discard any nut which turns with less than 13 inch-pounds of torque. Remove adjusting nut (8), grip assembly (10), return pin (19), and pressure plate (18).

March 7, 1979

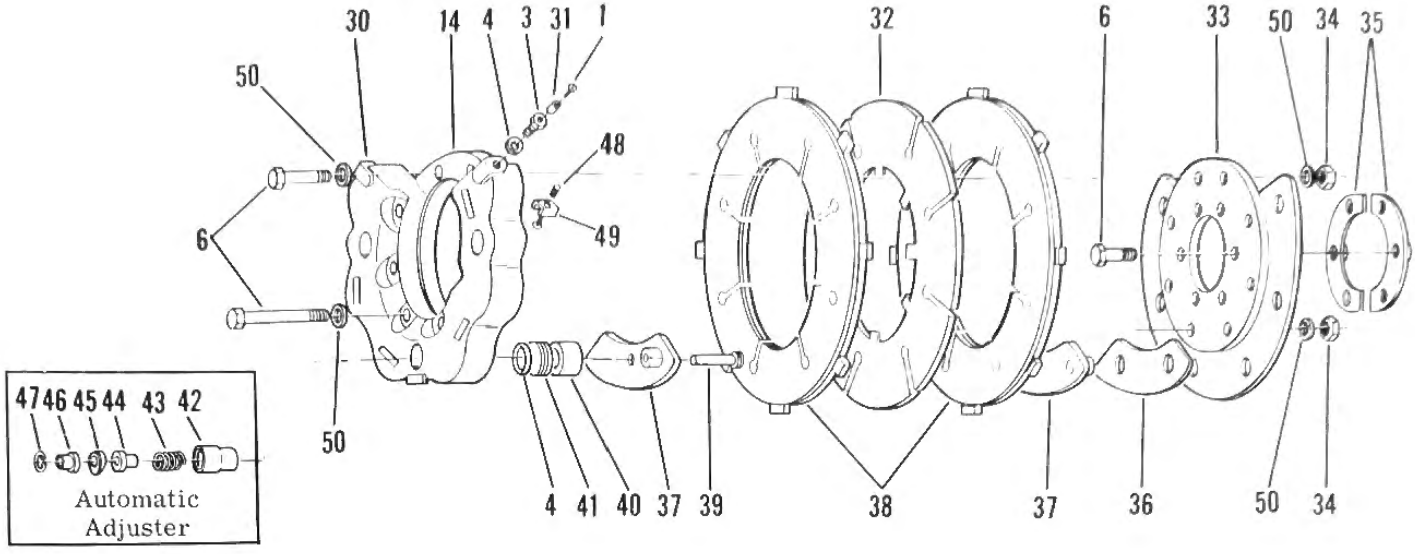

Aircraft 23-003 thru 23-099 except aircraft modified by SK23/24-219.

Figure 3-36. Multiple Disc Brake Assembly (Sheet 3 of 3)

MULTIPLE DISC BRAKE - DISASSEMBLY [B]. (See figure 3-36.) During disassembly, tag and keep parts together for reassembly into same unit.

a. Remove nuts, bolts (6), and countersunk washer (5).

b. Remove backplate (26), first rotating disc (22), stationary disc (25), second rotating disc (22), and torque tube (23).

c. Remove adjuster nuts (8), grip assembly (10), return pin (19), and pressure plate (18).

Note

Do not disassemble outer spring holder unless parts replacement is required.

d. To disassemble outer spring holder (13), remove and place in arbor press.

e. Compress inner spring holder (11) and remove retaining ring (9).

f. Release arbor press and remove inner spring holder and spring from outer spring holder.

g. Remove insulator (17), piston (16), packing retainer (15), and O-ring (4).

Note

- The sleeve bushing and spacer are shrunk fit in brake housing and should not be removed unless replacement is required.

- Remove bleeder screw, washer, adapter, and O-ring from housing before heating.

h. To remove sleeve bushing and spacer, heat housing in boiling water or oven to 121° C (250° F) maximum for 30 minutes.

i. Clean rotating discs, stationary disc, pressure plate, back plate and insulators with compressed air.

j. Clean remaining metal parts with P-S-661 cleaning solution and wipe dry with a clean lint-free cloth.

Note

New O-rings must be used at each brake overhaul. Clean with denatured alcohol and coat with MIL-H-5606 hydraulic fluid prior to installation.

MULTIPLE DISC BRAKE - INSPECTION [A]. (See figure 3-36.)

a. Inspect segmented carrier and lining assemblies for wear and replace if carrier and lining thickness is below 0.180 inch.

b. Check pistons (41), brake housing (14), and housing (42) with fluorescent penetrant for cracks and breaks.

c. Visually check all metal parts for pitting, corrosion, cracks, uneven wear, and other surface defects.

[A] Aircraft 23-003 thru 23-099 except aircraft modified by SK23/24-219.
[B] Aircraft 23-003 thru 23-099 modified by SK23/24-219.

d. Inspect O-ring sealing surfaces for smoothness.
e. Inspect O-ring (4) for pits and cuts. Replace if required.
f. Inspect carrier and lining assembly (32) for wear and replace lining if thickness is less than 0.130 inch.
g. Inspect brake disc (38) for wear. Replace if inside diameter is less than 5.312 inches or if thickness is less than 0.180 inch.

MULTIPLE DISC BRAKE - INSPECTION [B]. (See figure 3-36.)

a. To determine disc wear with brakes installed on aircraft, apply full brake pressure and hold.
b. Measure distance between brake housing and pressure plate.
c. If the distance is 0.20 inch or greater, remove and disassemble brake for inspection.
d. Inspect rotating discs as follows:
1. Check relief slot holes in discs for cracks and replace if cracked.
2. Inspect discs for chipped areas.

Note

Up to 25% of the disc thickness may be lost through chipping, and still be serviceable, if chipping is scattered.

3. Replace discs when the thickness across an unchipped area reaches 0.208 inch or less.
4. Discs may be dished out a maximum of 0.03 inch when used with other discs dished in the same direction.
5. Inspect discs for damaged or bent drive tangs.
6. Replace discs which are shrunk under 5.20 inches inside diameter.

e. Inspect stationary disc as follows:
1. Check relief slot holes in disc for cracks and replace if cracked.
2. Disc may be dished out a maximum of 0.03 inch when used with other discs dished in the same direction.
3. Replace shrunken disc if it cannot be installed over torque tube without interference.

f. Inspect back plate and pressure plate as follows:
1. Check back plate and pressure plate for cracks and replace if cracked.
2. Wear pad rivets must be snug but slight movement of wear pads is allowed.

Note

- Missing rivets through wear pads must be replaced. The rivet heads shall be flush with or below the pad surface. No more than one crack is allowed in rivets.

- The wear pads tend to curl away from the back plate and pressure plate and form sharp edges during service. Slight curling is allowed if wear limits are not exceeded.

- Pads may be worn a maximum of 3/16 inch on both sides or a maximum of 3/8 inch on one side before replacement is required.

3. Newly installed wear pads must be ground flat to within 0.01 inch with a surface finish of 120 RHR (Roughness Height Rating).
4. Rivet heads must be flush with or below wear pad surface after grinding with no more than 25% of rivet head removed.
5. Wear pads on pressure plate shall be ground to a minimum thickness of 0.015 inch.
6. Wear pads on back plate shall be ground to a minimum thickness of 0.109 (±0.005) inch.

g. Inspect torque tube for cracks and replace if cracked.
h. Replace torque tube if side width of key slots are worn to 0.74 inch or less.
i. Replace adjuster nuts after 10 applications or if nuts can be screwed past self-locking position by hand.
j. Inspect grip assembly for corrosion or damage.
k. Replace grip assembly if 150 pounds force or less is required for movement when installed in outer spring holder.
l. Check inner and outer spring holders for distortion or damage.
m. Replace return springs if less than 48 pounds of force is required for a compression height of 0.50 inch.
n. Inspect return pins for thread damage, bending, and cracks under the head.
o. If insulators are deteriorated due to heat, small blisters may be removed by light grinding.
p. Check piston sealing surfaces for corrosion and wear.

Note

Small piston imperfections may be polished out with 350 grit sandpaper.

q. Replace O-ring packings and packing retainers at each brake overhaul.
r. Inspect brake housing as follows:
1. Inspect housing for corrosion, cracks, or other damage and replace if cracked.
2. Check housing cylinder walls and seal grooves for cleanliness and general condition, removing any imperfection by polishing with 350 grit sandpaper.
3. Inspect housing threads for cleanliness and condition.
4. Check sleeve bushing and spacer for general condition.
5. Magnaflux housing bolts, at each brake overhaul, for cracks at head radius and at first two threads adjacent to shank.
6. Replace nuts after 10 applications or if nuts can be screwed past self-locking position by hand.

[B] Aircraft 23-003 thru 23-099 modified by SK23/24-219.

MULTIPLE DISC BRAKE - REWORK AND REASSEMBLY [A]. (See figure 3-36.)

a. Hand file minor surface blemishes on metal parts to relieve sharp corners which may cause stress concentration.

b. Remove nicks, scratches, and corrosion from brake housing (14) with emery cloth. Depth of metal removed shall not exceed 0.015 inch.

c. Paint bare areas with two coats of MIL-P-8585 zinc chromate primer and one coat of MIL-L-7178 aluminum lacquer.

d. Reassemble automatic adjuster as follows:

Note

Use same tool described in step a.1 of MULTIPLE DISC BRAKE - DISASSEMBLY, this section.

1. Install housing (42) in brake housing (14) with access hole toward outer surface of piston housing.
2. Assemble O-ring (4), piston (41), and piston insulator (40) in brakg housing (14).
3. Install pin (39) through hole in segmented carrier and lining assembly (37) and into housing (42).
4. Assemble spring (43), retainer (44), retainer pin (45), and bushing (46) over pin (39).

Note

Assure that tapered end of retainer pin (45) is centered in the stop groove radius of housing (42).

5. Place assembled parts in drill press with the 1/2-inch diameter end of tool in chuck.
6. Place support under head of pin (39).
7. Lower tool against bushing (46) so that bushing bottoms against shoulder of housing (42).
8. Install retainer ring (47) in groove in housing (42).
9. Make sure retainer ring is properly seated in groove, then slowly release pressure on tool and remove components from drill press.

e. Install bolts (6) through brake housing (14) and place brake housing on work bench with outboard face down (segmented carrier and lining assembly up).

f. Assemble insulator (36) and segmented carrier and lining assembly (37) on torque plate (33).

g. Assemble brake disc (38), carrier and lining assembly (32), brake disc (38), and torque plate (33) with insulator and carrier and lining assembly on brake housing (14).

h. Apply MIL-T-5544 thread compound to threads of bolts (6).

i. Install washers (50) and nuts (34) on bolts (6) and torque to 140 to 160 inch-pounds.

j. Assemble O-ring (4), adapter (3), seal (31), and bleed screw (1) in brake housing (14).

MULTIPLE DISC BRAKE - INSTALLATION [A]. (See figure 3-36.)

a. Position brake assembly on axle with hydraulic port aft and up. Position sector (35) on inboard side of axle flange. Secure brake assembly and sector (35) to axle with bolt (6). Torque bolts (6) to 240 to 270 inch-pounds.

b. Install main gear wheel. (Refer to MAIN LANDING GEAR WHEEL - INSTALLATION, this section.)

c. Install disc drive keys (8, figure 3-25) on inner wheel half and safety wire.

d. Remove plugs and caps and reconnect brake hydraulic lines.

e. Pressurize the hydraulic system and bleed the brakes. (Refer to BLEEDING BRAKE SYSTEM, this section.)

MULTIPLE DISC BRAKE - REWORK AND REASSEMBLY [B]. (See figure 3-36.)

a. Hand file minor surface blemishes on metal parts to relieve sharp corners which may cause stress concentration.

b. Remove nicks, scratches, and corrosion from brake housing (14) with emery cloth. Depth of metal removed shall not exceed 0.015 inch.

c. Paint bare areas with two coats of MIL-P-8585 zinc chromate primer and one coat of MIL-L-7178 aluminum lacquer.

d. Lubricate O-ring with a light coat of MIL-G-7711 grease and install on adapter.

e. Install adapter (3) in brake housing (14), place washer (2) on bleed screw (1), and secure bleed screw in adapter (3).

f. Lubricate O-ring packings, retainer, brake housing cylinder walls and seal grooves, and piston contact surface with a light coat of MIL-G-7711 grease.

g. Carefully install O-ring (4) and retainer (15) in cylinder wall grooves of brake housing (14).

h. Install piston (16) into brake housing with recessed insulator ends toward the outside.

i. Align pressure plate (18) on brake housing (14) against insulators (17) with wear pads (20) up.

j. Insert return pins (19) through insulators (17) and pistons (16) with return pin heads in slots of pressure plate.

k. Grasp threaded ends of return pins protruding through brake housing (14) and turn brake assembly over, placing pressure plate surface on working table.

l. Assemble inner and outer spring holders as follows:

1. Place return springs (12) in outer spring holders (13).
2. Place inner spring holder (11) inside return spring.
3. Depress inner spring holder and install retaining ring (9) into outer spring holder groove.
4. Coat grip assemblies with MIL-H-5606 hydraulic fluid and install on ends of return pins.

Note

Assure that the 0.11-inch length of grip assemblies are on return pins.

[A] Aircraft 23-003 thru 23-099 except aircraft modified by SK23/24-219.
[B] Aircraft 23-003 thru 23-099 modified by SK23/24-219.

5. Install adjuster nuts (8) on return pins.

m. Turn brake assembly over and position torque tube (23) against brake housing (14) with the solid keyway centered through open section of pressure plate.

n. Install first rotating brake disc (22), stationary disc (25), and second rotating disc (22) on torque tube (23).

o. Place back plate (26) on torque tube (23) with holes aligned.

p. Lubricate bolt threads, bolt head bearing surfaces, countersunk washers and nuts with MIL-T-5544 anti-seize compound.

Note

Install countersunk washers with chamber facing bolt heads.

q. Install nuts and torque to 120 inch-pounds.

MULTIPLE DISC BRAKE - INSTALLATION [C]. (See figure 3-36.)

a. Install brake assembly on main gear axle.

b. Install torque plate with bolts, countersunk washers, spacers, washers and self-locking nuts. Assure that countersunk washers are correctly installed on bolts.

c. Install main gear wheels. (Refer to MAIN LANDING GEAR WHEEL - INSTALLATION, this section.)

d. Install hydraulic hoses on brakes.

e. Pressurize hydraulic system and bleed brakes. (Refer to BLEEDING BRAKE SYSTEM, this section.)

MULTIPLE DISC BRAKE - FUNCTIONAL TEST.

a. Apply normal braking pressure and hold several times while checking for leakage.

b. Release brake pressure and observe brake release.

c. Rotate main landing gear wheels and check for freedom of movement.

RIGGING BRAKES. (See figure 3-37.) (After rudder pedals have been rigged to a neutral position [A] 5° (±1°), [B] 7° (±1°) aft of vertical.)

a. Adjust [A] upper link ([B] lower link) to obtain brake pedal angle of 20° (±3°) forward of vertical and [A] 1.55" ([B] 1.33") above floorboard as shown.

b. Install a gage (0 to 2000 psi) in the brake pressure line. With pedals in neutral, apply an 80-pound load with a spring scale to the pedal toe position. The gage should indicate approximately 400 psi.

c. With either pedal fully forward and brakes applied, the gage should indicate approximately 600 psi.

d. With maximum braking force applied to both pedals, the gage should indicate approximately 1400 psi normal system pressure.

BLEEDING BRAKE SYSTEM

Brake system bleeding is required whenever the system is opened at any point between the power brake valves and the wheel brake assemblies, whenever the brakes become spongy in service or when-

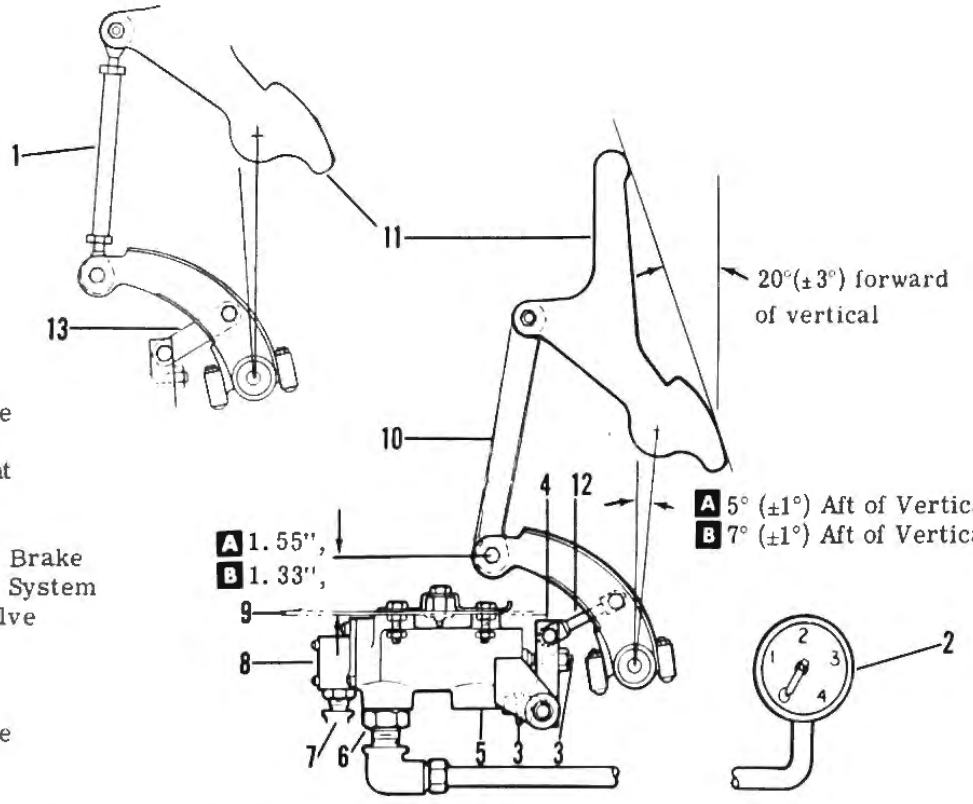

1. Link - Adjustable
2. Pressure Gage
3. Valve Adjustment
4. Pivot Arm
5. Return Port
6. Pressure Port - Brake
7. Pressure Port - System
8. Power Brake Valve
9. Floorboard
10. Link - Upper
11. Brake Pedal
12. Link - Adjustable
13. Link - Lower

[A] Aircraft 23-003 thru 23-099 except aircraft modified by SK23/24-270.
[B] Aircraft 23-003 thru 23-099 modified by SK23/24-270.
[C] Aircraft 23-003 thru 23-099 modified by SK23/24-219.

Figure 3-37. Rigging Brakes

ever the parking brake will no longer hold. In case of parking brake malfunction, the system should be further checked for leakage.

a. Normally the 10 psi head pressure in the hydraulic reservoir will be sufficient to bleed the brakes; however, if the head pressure is not sufficient, turn on battery switch and cycle auxiliary hydraulic pump to maintain approximately 600 psi during the bleeding procedure.

b. Remove bleeder screw and install suitable adapter with clear hose. Slowly depress applicable brake pedal and allow hydraulic fluid to flow until no air bubbles are evident.

c. Remove adapter and hose and reinstall bleeder screw prior to releasing the brake pedal.

Note

Use care to depress brake pedal slowly as excessive fluid flow through the bleed port could cause the hydraulic fuses to close.

d. Repeat steps b and c for remaining brake assemblies.

e. Service hydraulic reservoir as required to replenish fluid lost during bleeding.

f. Turn off auxiliary hydraulic pump and battery switch.

PARKING BRAKE SYSTEM. The parking brake is connected to, and used in conjunction with, the primary brake system. On **A** the parking brake valves are located under the left floorboards between frames 9 and 10. On **B** the parking brake valves are located under the right floorboards between frames 10 and 11. The parking brake control handle is located on the center pedestal.

a. Operation. Depressing the brake pedal and pulling the parking brake control handle sets the parking brake. When the pedals are depressed, fluid pressure is built up in the system and the parking brake valve checks the pressure return and holds pressure against the brakes. Return the parking brake lever to OFF to release the parking brake.

Note A

The parking brake valve contains chambers which hold a reserve of fluid to compensate for leakage and temperature changes. Difficulty may be encountered in releasing the parking brake unless the pedals are depressed and released very slowly while holding the control in the "OFF" position. This slow release is necessary to allow the fluid to be expelled from the reserve chambers.

RIGGING PARKING BRAKE VALVE. When installing and adjusting the parking brake valve control linkage, perform the following operations.

a. Control linkage on forward end of parking brake support to remain attached.

Note

Check control linkage for looseness. If slack exists, disconnect clevis from valve arm and readjust as required.

b. Rotate arm on parking brake valve to full aft position.

c. Place parking brake lever to full forward position.

d. Adjust clevis at valve so that holes in arm and clevis are in line, then extend clevis one full turn to ensure no slack exists in control linkage.

e. Install pin and cotter pin through clevis and valve arm.

EMERGENCY BRAKE SYSTEM. The emergency brake system includes the emergency bottle located in the nose, an emergency air pressure valve located beneath the floorboard between frames 6 and 7, and an emergency brake handle located on the center pedestal.

a. Operation. Depressing the emergency brake handle releases air pressure through the emergency air pressure valve and shuttle valves located on the main gear strut to apply the brakes. To release the brakes, release the emergency brake handle and the air pressure is relieved overboard. The bottle must be recharged with dry air or nitrogen when the indicated pressure falls below the green line on the gage. Bleed the brakes to restore to normal operation. (Refer to BLEEDING BRAKE SYSTEM, this section.)

SPOILER SYSTEM. (See figure 3-38.) The electrically actuated, hydraulically operated spoiler system consists of a spoiler switch on the center cockpit pedestal, a solenoid-operated selector valve, a two-way restrictor and actuator in each wing, and a red (spoiler) light on the instrument panel.

Note

On extended parking time with power shut off, the flaps may droop and spoilers rise. On starting either the engines or the auxiliary pump, the flaps and spoilers will return to the position prior to power shutoff provided their control switch settings have not been changed.

a. The spoiler switch has two positions; EXTEND and RETRACT. Setting the switch to EXTEND energizes the spoiler control valve which directs fluid

A Aircraft 23-003 thru 23-049.
B Aircraft 23-050 thru 23-099

SPOILER SYSTEM - TROUBLE SHOOTING.

TROUBLE	PROBABLE CAUSE	CORRECTION
SPOILERS DO NOT OPERATE.	No hydraulic pressure.	Check and repair hydraulic system.

TROUBLE	PROBABLE CAUSE	CORRECTION
SPOILERS DO NOT OPERATE (Continued)	Open electrical circuit from control switch to selector valve.	Check circuit continuity.
	Spoiler mechanical downlock binding.	Repair or replace mechanical downlock.
	Defective control switch.	Replace switch.
	Defective actuator.	Replace actuator.
	Defective spoiler control valve.	Replace control valve.

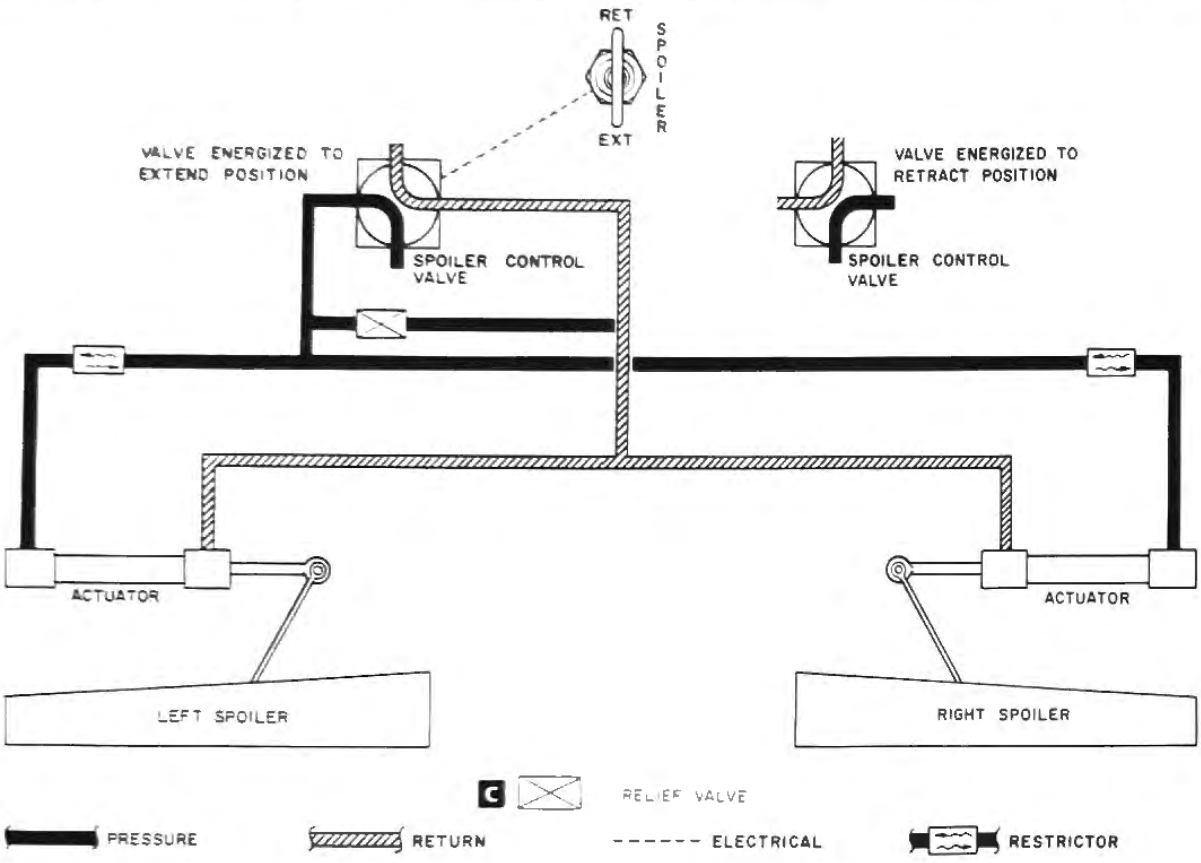

Figure 3-38. Spoiler System Schematic

flow through the restrictors to the extend ports on the spoiler actuators to extend the spoilers. Setting the spoiler switch to RETRACT reverses the sequence. The red (spoiler) light on the instrument panel lights during extension and remains lighted until the spoilers are fully retracted. The restrictor controls system operation speed. Spoiler travel is 45 1/2° (-0°, -5°).

b. Relief Valve - Spoiler Up **C**. (See figure 3-38.) A relief valve, set at 1550 psi, is installed in the spoiler up line to allow inflight blowdown due to air load present at high speeds.

A Aircraft 23-003 thru 23-089 Not Incorporating AMK73-5.

B Aircraft 23-090 thru 23-099 and Aircraft Incorporating AMK73-5.

RIGGING SPOILERS. Refer to Section II for rigging instructions.

FLAP SYSTEM. (See figure 3-40 and 3-41.) The flap system consists of two flaps, **A** a flap actuator, (**B** two flap actuators), a control valve, a restrictor, and two pressure relief valves. Flap motion is a combination of outboard (aft) movement to increase wing area and a tilting (down) movement to change the airface section. Tracks incorporated at rib stations 41.26 and 107.43 of each wing direct flap travel. Maximum flap extension is 40° (+5°, -0°) down. Flaps should travel from maximum up to maximum down in 6 seconds or less. System operating pressure is 1500 (±50) psi.

C Aircraft 23-018 thru 23-039

a. Operation [C]. Setting the manual flap control handle to DOWN mechanically positions the flap control valve to direct hydraulic fluid to the down side of the flap actuator which in turn mechanically actuates cables and push-pull tubes and begins flap extension. Simultaneously, a mechanical followup system connected to the flaps begins returning the control valve selector toward neutral to stop the flaps at a position corresponding to the control handle setting. Setting the control handle to UP allows fluid to flow through the up side of the flap control valve retracting the flaps and the selector valve is again returned to neutral by the mechanical followup system.

b. Operation [A]. Setting the flap switch to the down position energizes a solenoid which positions the flap control valve to direct hydraulic fluid to the down side of the flap actuators. This in turn actuates the system to begin flap extension. When the flap switch is returned to the off position, the solenoid is deenergized and the flap control valve selector returns to neutral. This cuts off all hydraulic flow to the actuator and stops the flaps at the desired position. Setting the flap switch to UP energizes the solenoid and positions the flap control valve selector to direct hydraulic fluid to the up side of the flap actuators. This in turn actuates the system to begin flap retraction. When the flaps are fully retracted, a microswitch is contacted which breaks the electrical circuit to deenergize the solenoid and allow the flap control valve selector to return again to the neutral (OFF) position.

c. Relief Valve - Flap Up. (See figure 3-40.) The relief valve, set at 1000 psi, prevents damage to the flap control structure in the event of partial flap travel during retraction. System pressure buildup, due to air loads in excess of 1000 psi, is relieved through the valve.

d. Relief Valve - Flap Down. (See figure 3-40.) The relief valve, set at 1650 psi, prevents damage to the flap control system due to excessive airspeed with the flaps down. System pressure buildup, due to air loads in excess of 1650 psi, is relieved through the valve.

[A] Aircraft 23-030 thru 23-099.

[C] Aircraft 23-003 thru 23-029

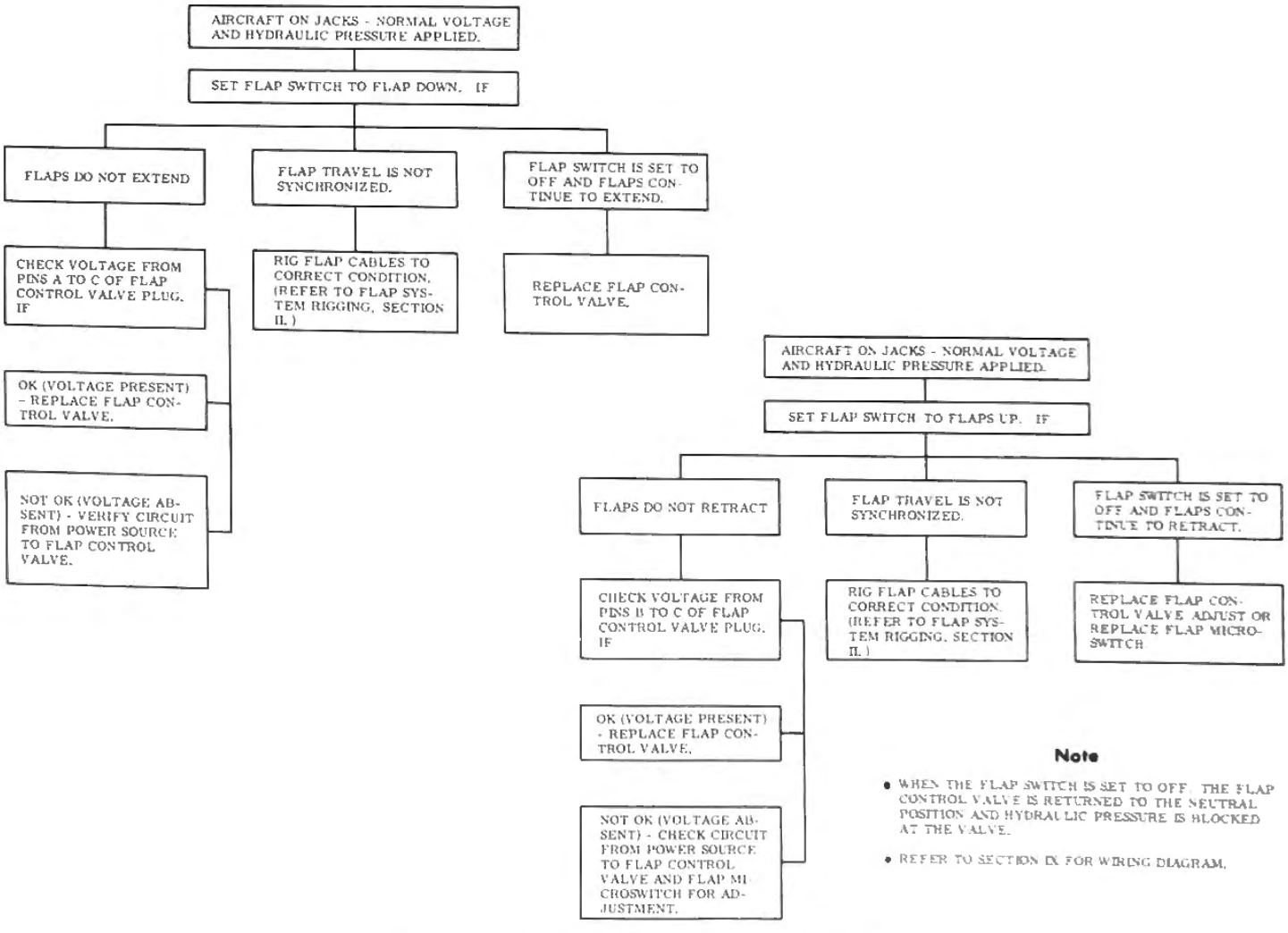

Figure 3-39. Flap System Trouble Shooting

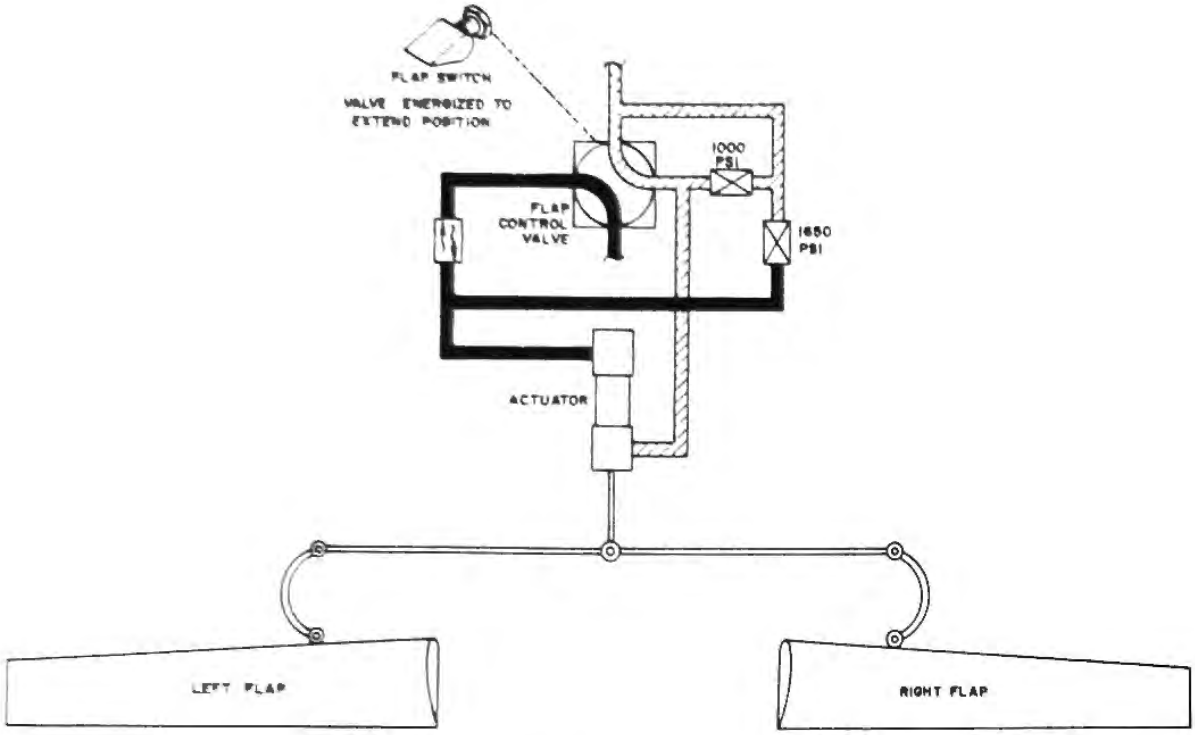

Aircraft 23-003 thru 23-089
Not Incorporating AMK73-5.

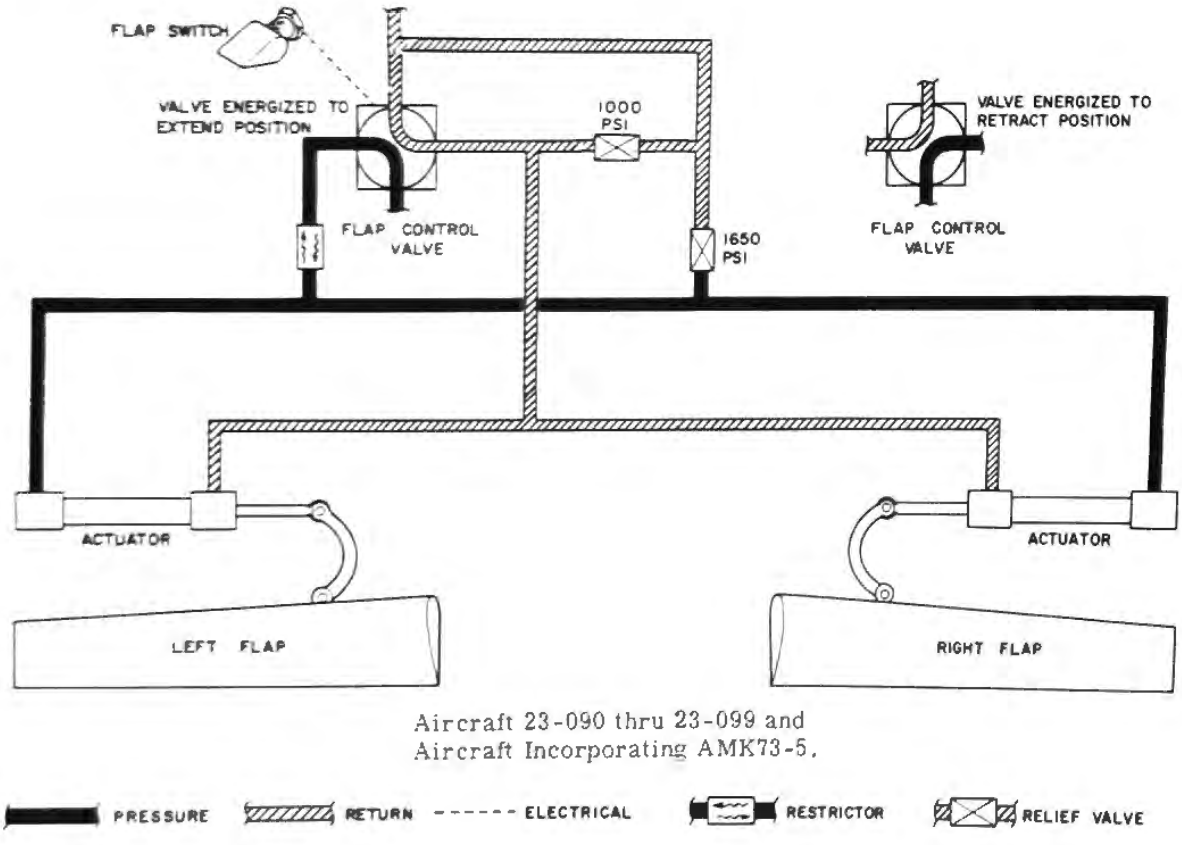

Aircraft 23-090 thru 23-099 and
Aircraft Incorporating AMK73-5.

Figure 3-40. Flap System Schematic

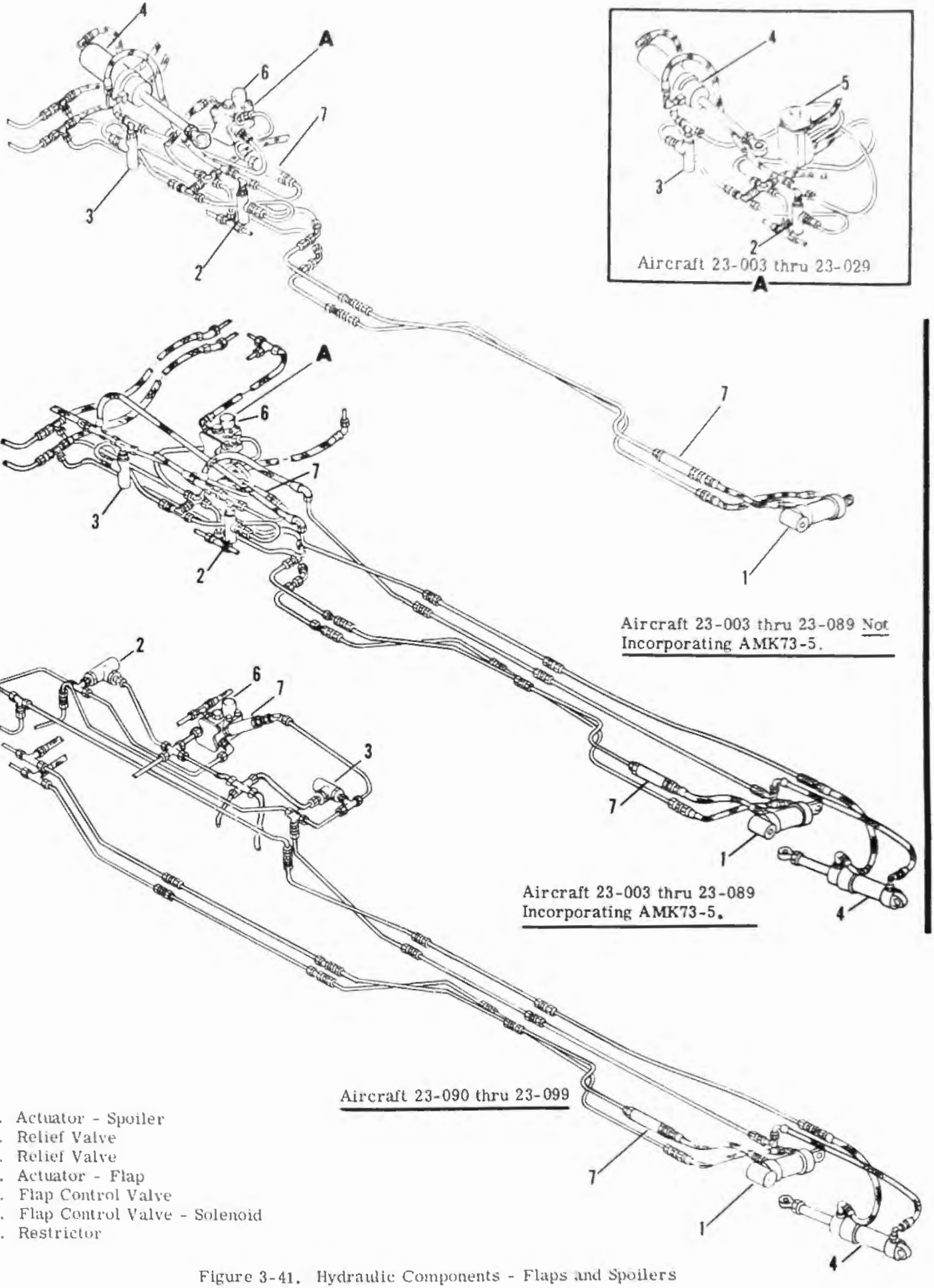

Figure 3-41. Hydraulic Components - Flaps and Spoilers

SECTION IV
ENVIRONMENTAL SYSTEMS

TABLE OF CONTENTS

Title	Page
Environmental Systems	4-1
Refrigeration System	4-1
Compressor Motor	4-4
Refrigerant Compressor	4-4
Refrigerant Condenser	4-6
Receiver Dehydrator	4-6
Evaporator and Blower	4-7
Current Limiter	4-7
Cabin Air Conditioning System	4-10
Air Bleed Shutoff Valves	4-10
Heat Exchanger	4-10
Air Bleed Check Valves	4-10
Ram Air Damper	4-17
Temperature Controls	4-17
Flow Control Valve	4-17
Cabin Pressurization System	4-17
Cabin Altitude Controller	4-19
Cabin Air Exhaust Control Valve	4-23
Cabin Altitude Emergency Control Valve	4-23
Cabin Safety Valve	4-23
Cabin Pressure Relief Valve	4-25
Cabin Pressure Warning System	4-25
Peri-Seal Connector	4-25
Windshield Defog System	4-26
Defog Dehumidifier	4-30
Windshield Ice Detection System	4-30
Oxygen System	4-31
Oxygen Cylinder Assembly	4-31
Oxygen Cylinder Shutoff Valve	4-31
Oxygen System Regulator	4-31
Crew Masks	4-31
Passenger Masks	4-31
Solenoid Shutoff Valve	4-31
Aneroid Switch	4-31
Manual Shutoff Valves	4-31
Door Actuator Valves	4-33
Wing Leading Edge Anti-Ice System	4-34A

ENVIRONMENTAL SYSTEMS. The environmental systems provide cabin cooling, heating, ventilation, dehumidification, windshield defogging, and the air source for cabin pressurization.

REFRIGERATION SYSTEM. (See figure 4-2.) The refrigeration system is used for ground cooling, in-flight cooling at lower altitudes, and dehumidification. Components of the refrigeration system consist of a compressor motor, compressor, receiver-dehydrator, condenser, switch, and an evaporator.

a. Operation.

Note

- When the aircraft is on the ground, the system must be powered by operating one engine at idle (48% rpm) or by an auxiliary power unit.
- The refrigeration system will disengage when the starter-generator switch is set to START.

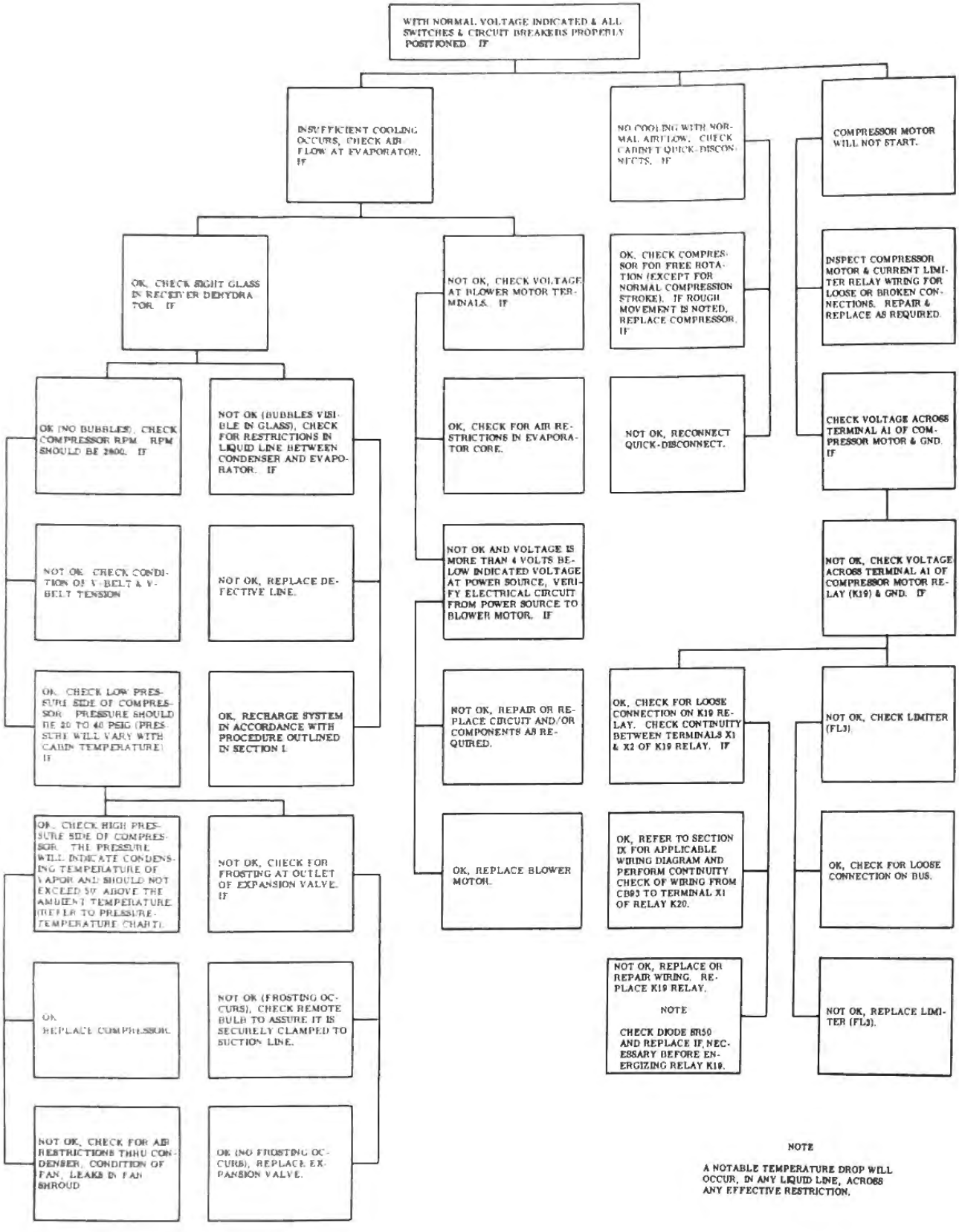

Figure 4-1. Refrigeration System Trouble Shooting

Learjet Temporary Service Manual Revision

MANUALS AFFECTED: Gates Learjet 23, 24, 24B, 24D/E/F and 25 Service Manuals.

FILING INSTRUCTIONS: Insert as listed below and retain until further notice.

Model 23	- Insert adjacent to page 4-3.
Model 24	- Insert adjacent to page 4-2.
Model 24B	- Insert adjacent to page 4-2.
Model 24D/E/F	- Insert adjacent to page 4-2.
Model 25	- Insert adjacent to page 4-2.

REASON: To incorporate the intent of Service Bulletin No. SB 23/24/25-290.

INSTRUCTIONS:

1. Revise the title "Refrigeration System Functional Check" or "Refrigeration System Functional Test" to read "Refrigeration System Operational Check."
2. Revise Refrigeration System Operational Check to read as follows:

REFRIGERATION SYSTEM OPERATIONAL CHECK.

WARNING

Do not operate Refrigeration System with condenser air outlet blocked.

Note

The operational check should be performed in 70° F or higher ambient temperature.

a. Connect a 300 to 400 psig gage to the compressor (DISCHARGE) and a 150 to 250 psig gage to the compressor (SUCTION) service valve connections.
b. Connect external power to the aircraft.
c. Set Battery Switch(es) to ON, Cooling System Switch to COOL SYS, and operate system until the discharge pressure gage indicates 200 psig minimum and the suction pressure gage indicates 35 psig maximum. If these readings are obtained, the system is operating properly. If pressure gage fails to rise to 200 psig or above, proceed with step d. If pressure rises to 200 psig or above, proceed with step f.
d. Set Cooling System Switch to OFF and observe cooling rate of the discharge line and the warming rate of the suction line.
e. If discharge line cools quickly and the suction line heats quickly, replace the compressor.
f. Pull the CAB BLO circuit breaker and observe the suction pressure. Suction pressure should drop to 5 psig within 5 minutes. If suction pressure does not drop to 5 psig, the expansion valve is defective and should be replaced.
g. Reset CAB BLO circuit breaker and allow system pressure to return to normal (discharge pressure 200 psig minimum and suction pressure 35 psig maximum).
h. Pull the FREON CONT circuit breaker and observe the rise in suction pressure. Suction pressure should rise rapidly to 45 (+10/-5) psig. The pressure rise should then stop or continue to rise at a slower rate. If rate of pressure rise has not decreased when pressure exceeds 55 psig, the expansion valve is defective and should be replaced.
i. Restore the system to normal.

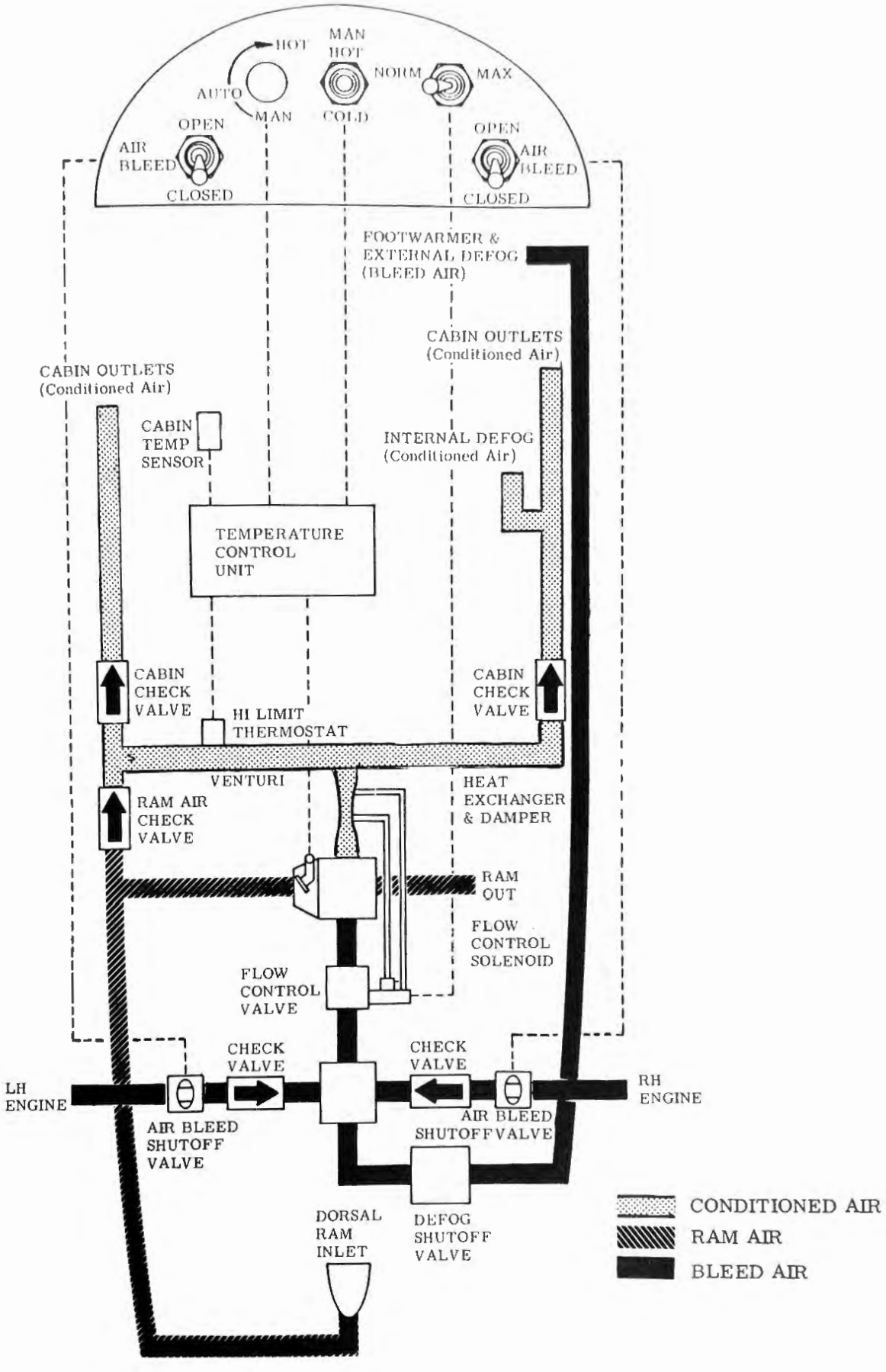

Aircraft 23-003 thru 23-029 except aircraft modifed by SK23-140.

Figure 4-6. Cabin Air Conditioning Schematic (Sheet 1 of 2)

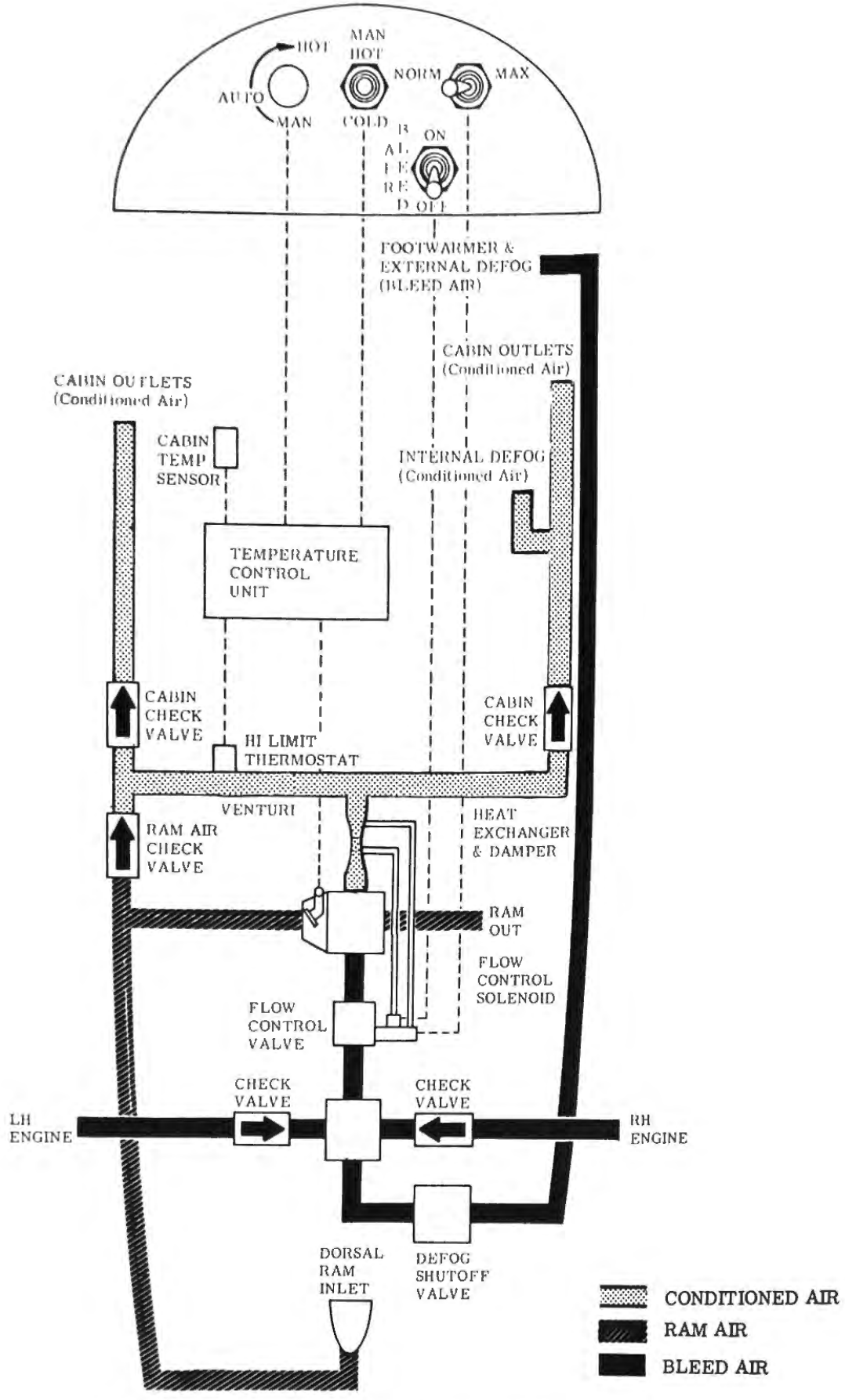

Aircraft 23-030 thru 23-099 and aircraft modified by SK23-140.

Figure 4-6. Cabin Air Conditioning Schematic (Sheet 2 of 2)

1. Clamp
2. Check Valve
3. Hose
4. Manifold
5. Hi Limit Thermostat
6. Tube Assembly
7. Temperature Sensing Element (Duct)
8. Dorsal Ram Air Inlet
9. Damper Box
10. Damper Actuator
11. Heat Exchanger
12. Spacer
13. Ram Air Exhaust Duct
14. Bolt
15. Clamp
16. Venturi
17. Flow Control Valve
18. Defog Shutoff Valve
19. Manifold
20. Peri-Seal Connector
21. Check Valve
22. Air Bleed Shutoff Valve
23. Firewall Pylon
24. Engine Air Bleed Line
25. Cabin Heating Louver
26. Flow Control Valve Solenoid

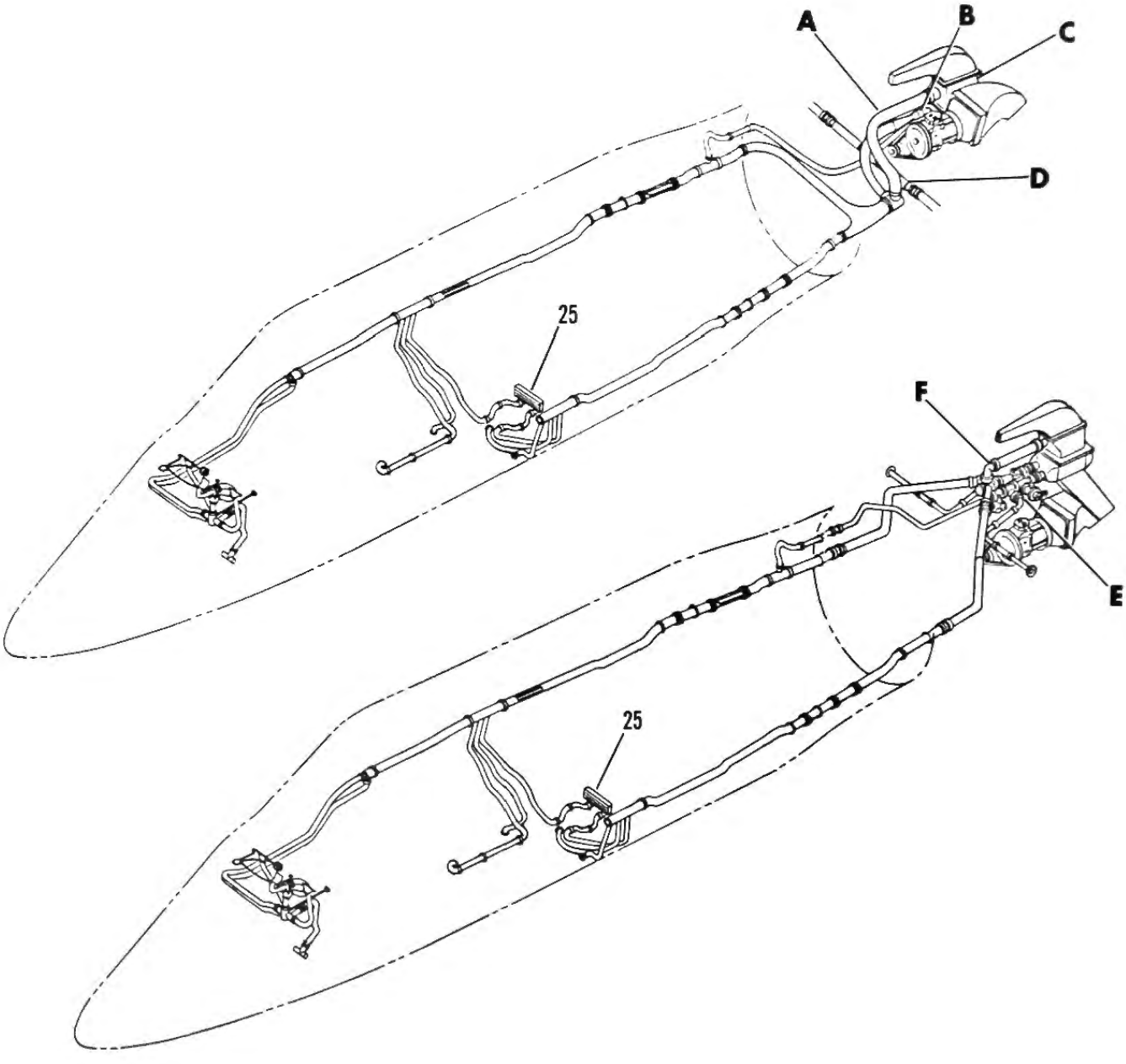

Figure 4-7. Cabin Air Conditioning Components Installation (Sheet 1 of 4)

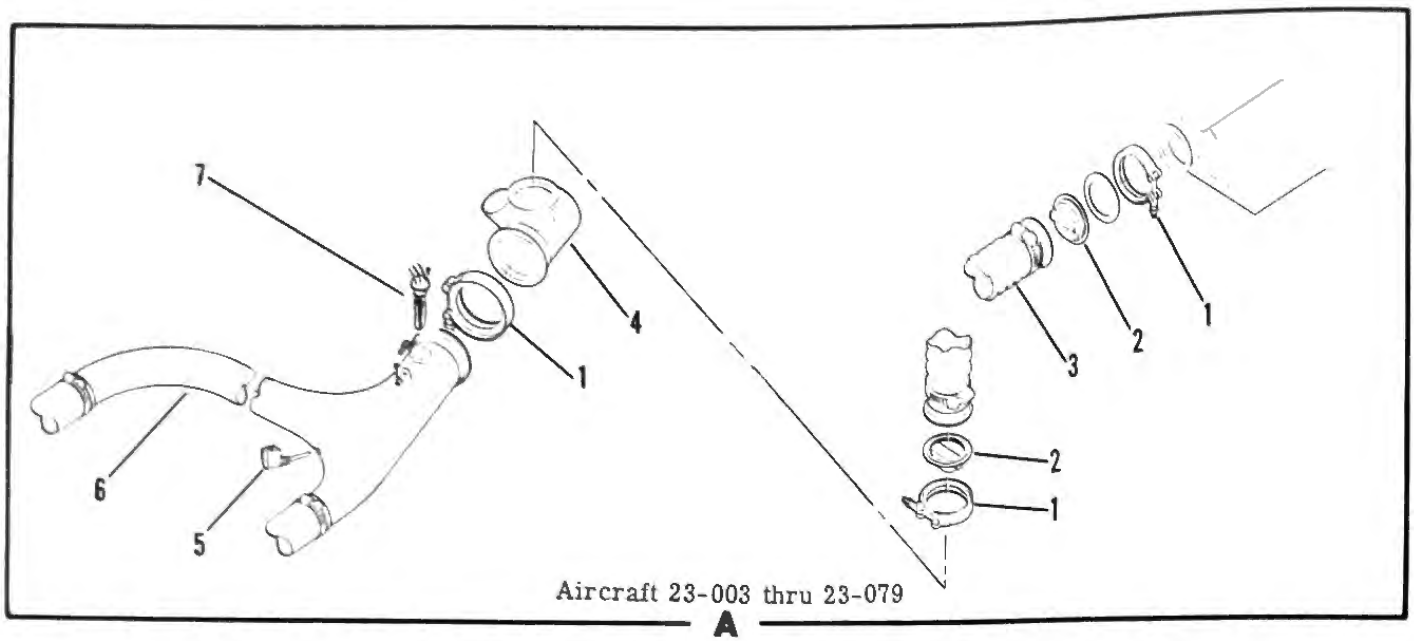

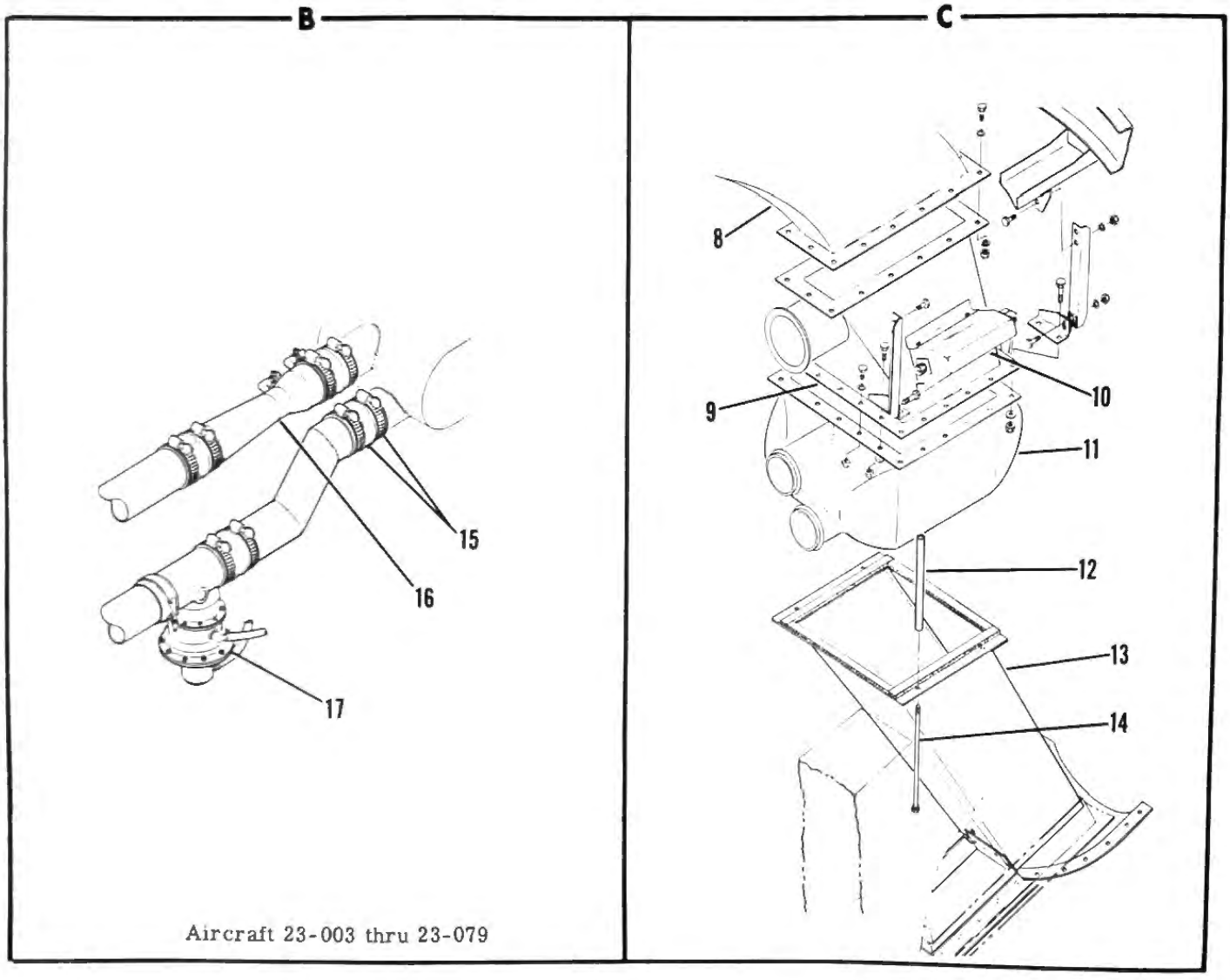

Figure 4-7. Cabin Air Conditioning Components Installation (Sheet 2 of 4)

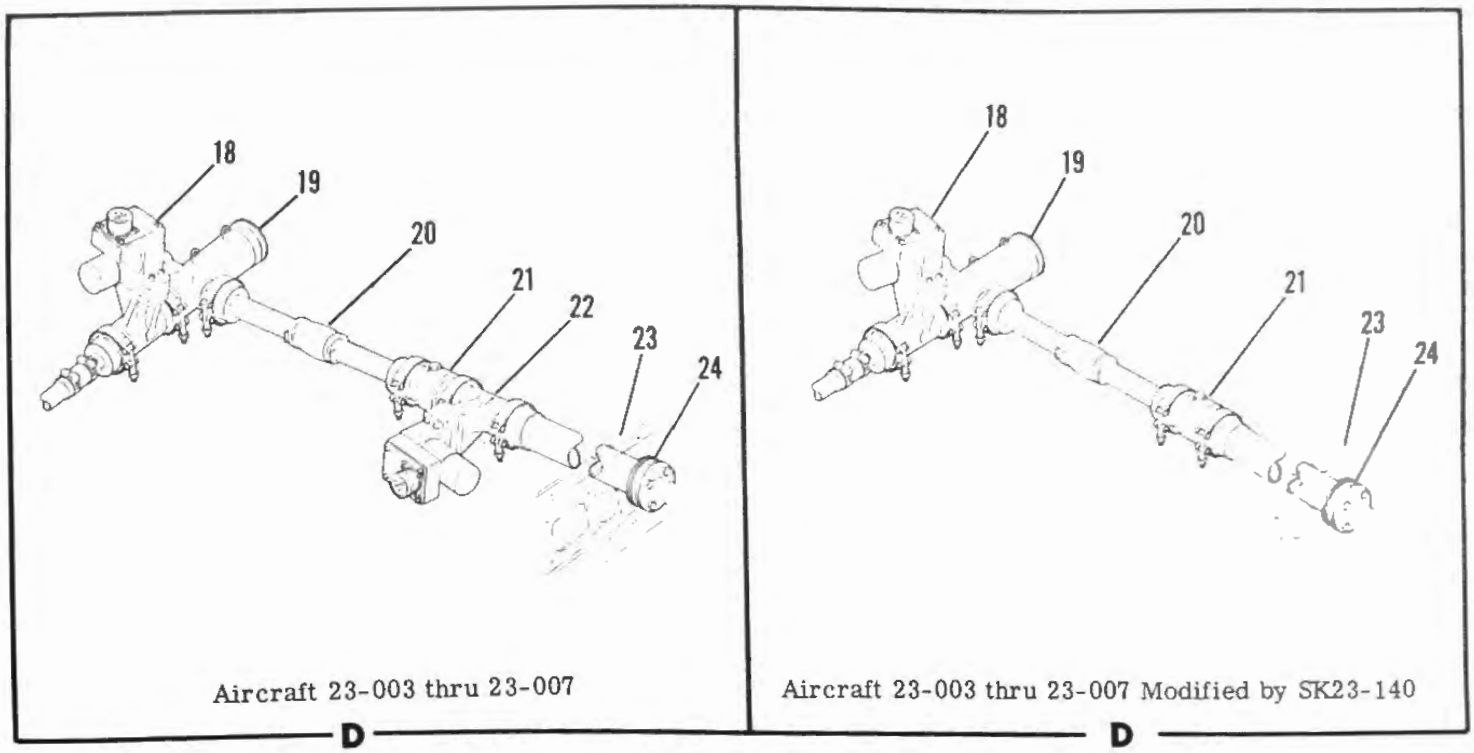

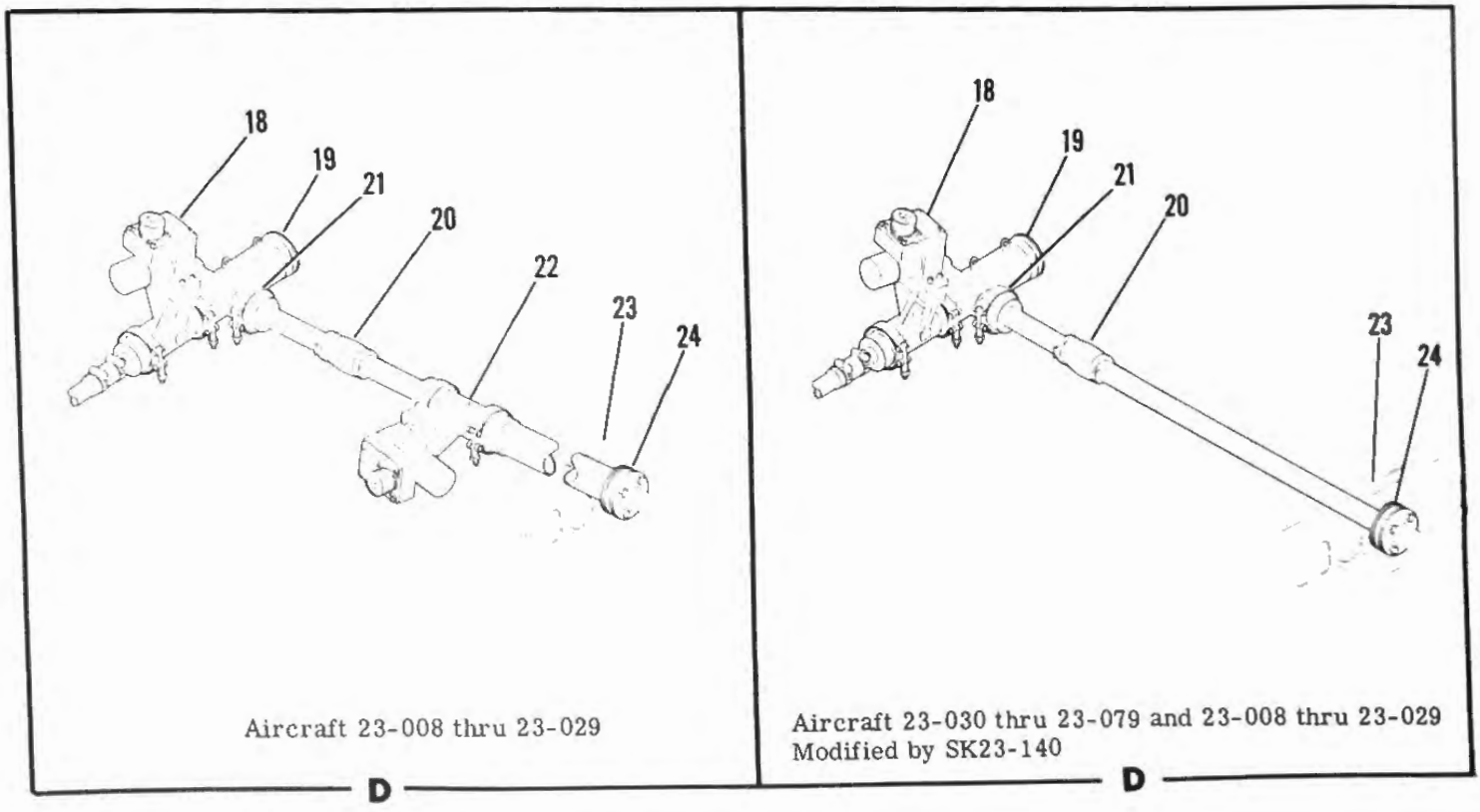

Figure 4-7. Cabin Air Conditioning Components Installation (Sheet 3 of 4)

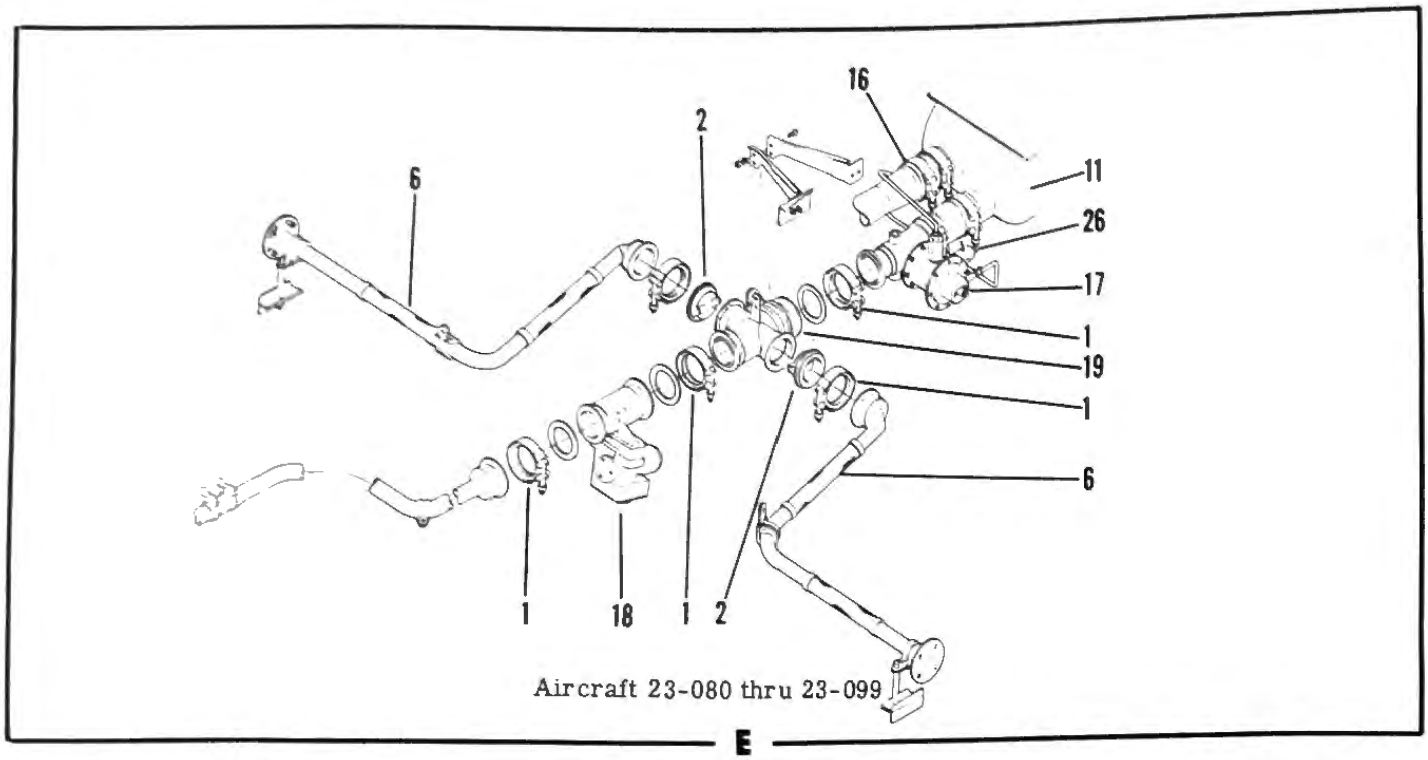

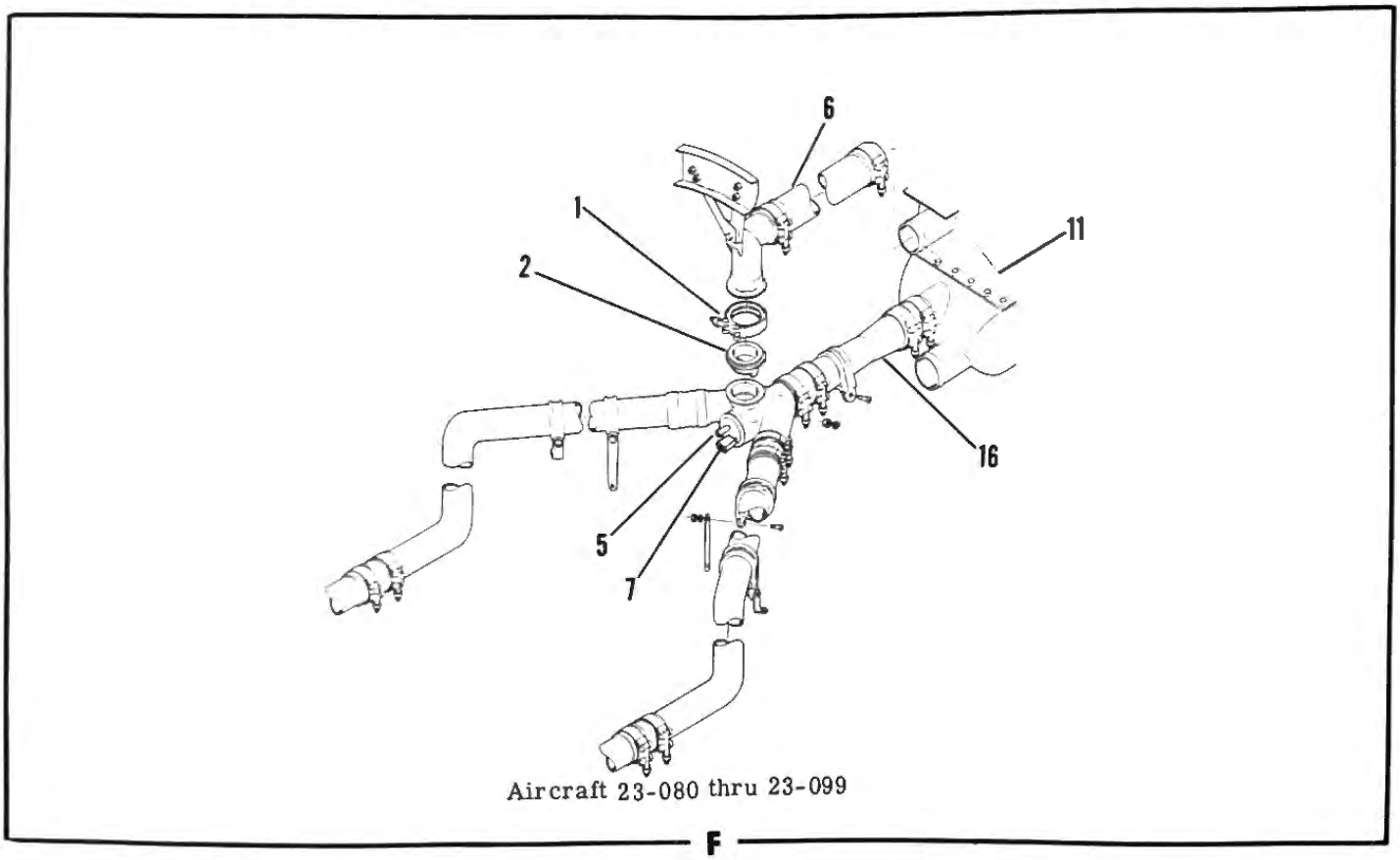

Figure 4-7. Cabin Air Conditioning Components Installation (Sheet 4 of 4)

Note

Drag torque is the amount of torque required to overcome the friction of any self-locking nut. This nut friction (drag torque) must be added to the torque callout to assure proper torquing. The tailcone bleed air ducting incorporates stainless steel clamps, nuts and bolts, which require higher nut-friction than the standard self-locking nuts. In some instances nut friction may exceed the required torque values.

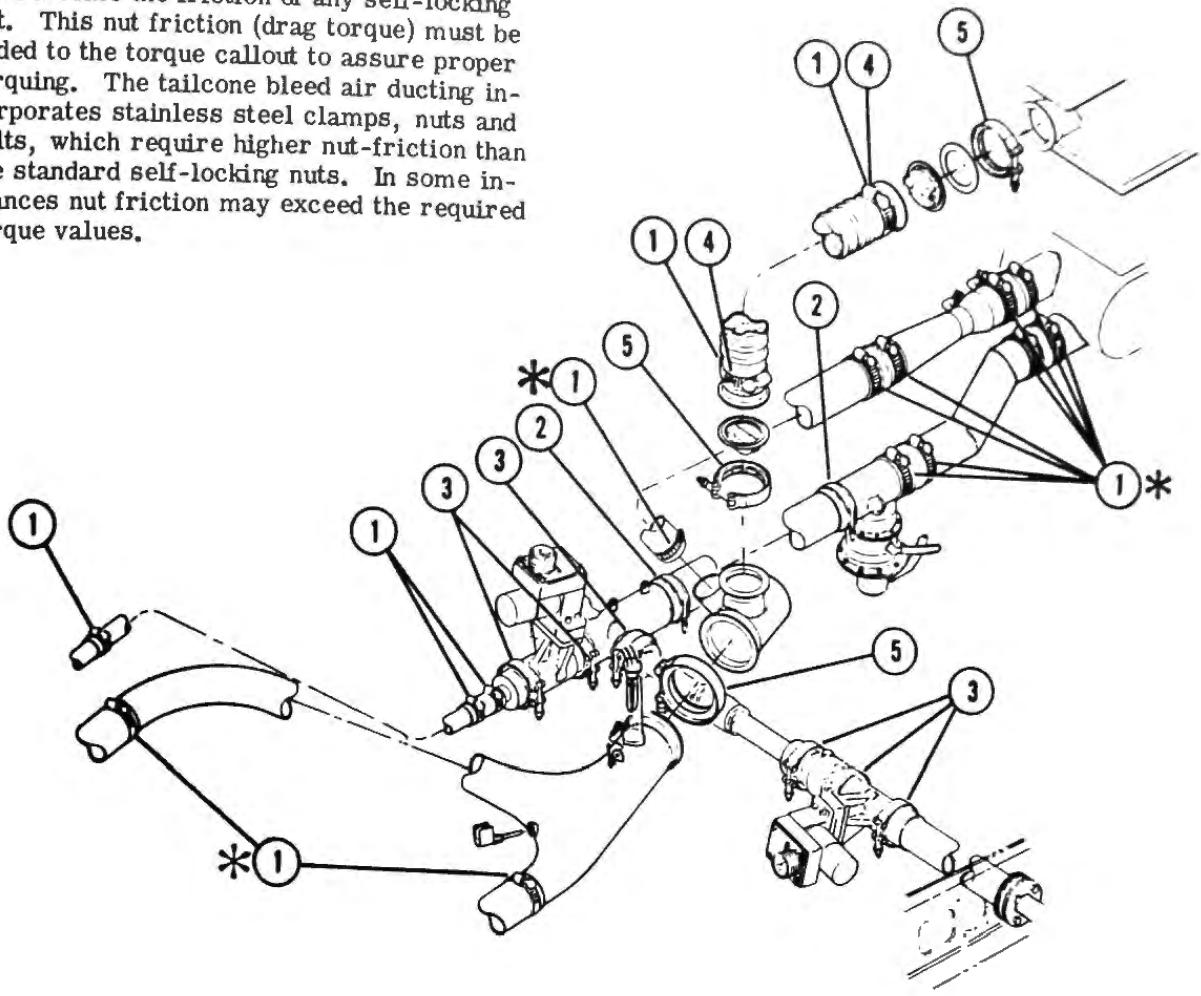

(1) Torque to 25 inch-pounds plus drag torque.

(2) Torque to 45 inch-pounds plus drag torque.

(3) Torque to 35 inch-pounds plus drag torque.

(4) On aircraft 23-050 thru 23-079, torque to 30 inch-pounds plus drag torque.

(5) Torque to 40 inch-pounds plus drag torque.

* Aircraft 23-050 thru 23-079 and Aircraft Modified by SK23-120, torque to 30 inch-pounds plus drag torque.

Aircraft 23-003 thru 23-079

Figure 4-7A. Tailcone Clamp and Coupling Torque Requirements (Sheet 1 of 2)

Note

Drag torque is the amount of torque required to overcome the friction of any self-locking nut. This nut friction (drag torque) must be added to the torque callout to assure proper torquing. The tailcone bleed air ducting incorporates stainless steel clamps, nuts and bolts, which require higher nut-friction than the standard self-locking nuts. In some instances nut friction may exceed the required torque values.

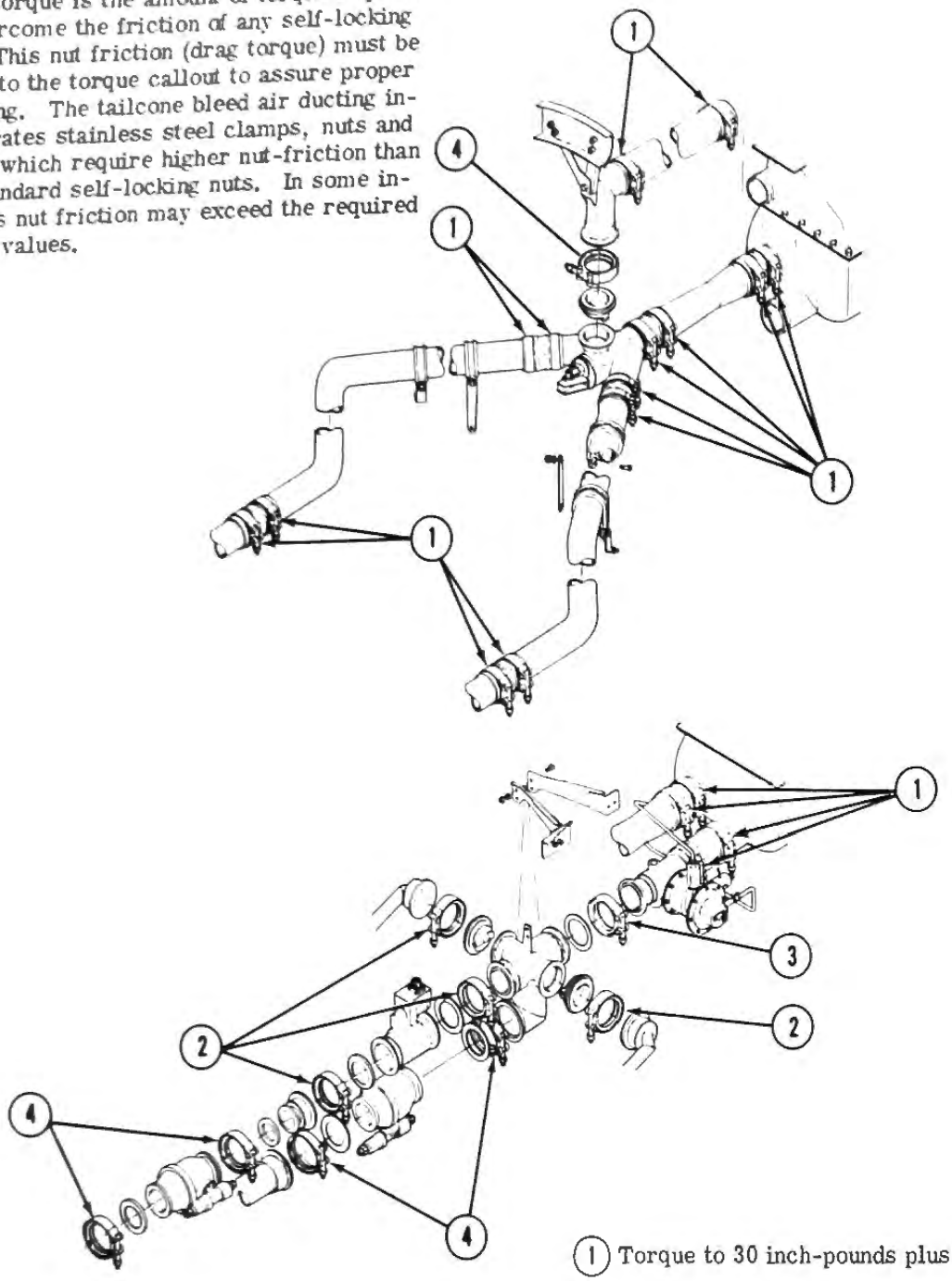

(1) Torque to 30 inch-pounds plus drag torque.

(2) Torque to 40 inch-pounds plus drag torque.

(3) Torque to 45 inch-pounds plus drag torque.

(4) Torque to 35 inch-pounds plus drag torque.

Aircraft 23-080 thru 23-099

Figure 4-7A. Tailcone Clamp and Coupling Torque Requirements (Sheet 2 of 2)

RAM AIR DAMPER. (See figure 4-7.) The damper is located between the ram air inlet and the heat exchanger. When the aircraft is in flight, the damper controls the ram airflow through the heat exchanger. The damper is actuated by the damper actuator.

DAMPER ACTUATOR. (See figure 4-7.) The damper actuator is located on the damper box assembly of the heat exchanger. The damper actuator, controlled by the temperature control unit, determines the amount of ram air to be circulated through the heat exchanger to cool engine bleed air prior to its entering the cabin.

DAMPER RIGGING. (See figure 4-8.)

a. Actuate the damper to the closed position by turning the cabin temperature HOT-AUTO-MAN selector to MAN and holding the manual HOT-COLD switch to HOT.

b. Adjust linkage rod so that the damper is fully closed (against internal stops).

c. Actuate the damper to the open position by holding the manual HOT-COLD switch to COLD.

d. Attach ohmmeter to potentiometer.

e. Loosen potentiometer and rotate until a reading of zero ohms is obtained. Rotate potentiometer in opposite direction to obtain a one or two ohm reading, this assures against possible potentiometer damage caused by the internal stop bottoming out.

f. Tighten potentiometer.

g. On aircraft modified by SK 23/24-213 check adjustment rod spring for a compressed length of 1.25 inch between washer and eyebolt.

h. Cycle damper actuator using manual HOT-COLD switch to assure proper adjustment.

TEMPERATURE CONTROLS. The temperature controls consist of the MANUAL-AUTO-HOT temperature selector, temperature control unit, cabin sensor, high temperature limit thermostat, HOT-COLD switch, CABIN AIR FLOW switch, and an AIR BLEED switch. For additional information on temperature control, refer to AIR CONDITIONING SYSTEM, this section.

FUNCTIONAL TEST OF TEMPERATURE CONTROL SYSTEM. The aircraft temperature control system should be functionally tested prior to engine run-up as follows:

a. Set BAT switch to ON.

b. Turn cabin temperature selector knob counterclockwise to MANUAL.

c. Set the HOT-COLD switch to HOT.

Note

The HOT-COLD switch is a momentary switch and must be held to the desired position.

d. Assure the damper valve is fully closed. The damper may require 35 to 55 seconds to close.

e. With the cabin temperature thermostat knob set to MANUAL, set the HOT-COLD switch to COLD. The damper should fully open in 35 to 55 seconds.

f. Turn the cabin temperature selector clockwise to the HOT position. The damper should fully close.

g. The checkout in the automatic position will function correctly with temperature in the area of the cabin sensors between 70° and 90° F. At temperatures above or below this range, it is possible that the system will move in one direction only. For example, if the temperature in the area of the cabin sensors is 0° F, the damper would fully close.

h. Set BAT switch to OFF.

FLOW CONTROL VALVE. (See figure 4-9.) The valve is shown in the closed position without air pressure and [C] the air bleed switch set to OFF. When pressure is applied, air is admitted to chambers A and B through orifices "A" and "B." On aircraft [D], the solenoid valve is normally open and the pressure in chamber B is less than that in A and the valve moves to the open position. On aircraft [D], the solenoid is controlled by the air bleed switch. When the differential across the venturi reaches the setting of the pilot regulator, the pilot regulator opens, admitting additional air into chamber B. This holds the valve in the proper position to maintain airflow. A cabin airflow switch opens the solenoid valve in the upstream static line which dumps this pressure to ambient and drives the valve to full open, allowing full bleed airflow into the cabin.

CABIN PRESSURIZATION SYSTEM. (See figure 4-11.) Cabin pressurization is provided by conditioned air entering the cabin through the air distribution ducts (figure 4-6) and by modulating the amount of air as it is exhausted from the cabin. Components of the pressurization system consist of a cabin air exhaust control valve, cabin safety valve, safety valve dump switch, auto-manual pressurization switch, manual cabin altitude control valve, cabin altimeter, cabin rate of climb indicator, pressure relief valve, and a microswitch on the LH landing gear.

a. Normal Operation. The cabin altitude controller, through a preset schedule, controls cabin pressure up to a maximum differential pressure of 8.3 psi. The cabin altitude controller senses cabin pressure and imparts an open or closed signal to the cabin air exhaust control valve. A safety valve and pressure relief valve are installed to prevent cabin overpressurization.

b. Emergency Operation [D]. Emergency cabin pressurization can be obtained by opening the defog valve and setting the defog-normal control knob to NORMAL. Cabin pressure can be maintained by operating the cabin altitude emergency control valve between the UP ALT and DN ALT.

[C] Aircraft 23-003 thru 23-029

[D] Aircraft 23-030 thru 23-099

Note

Damper shown in fully closed position.

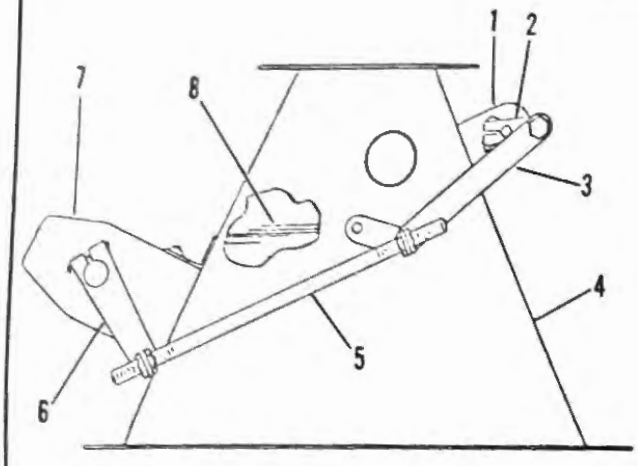

Aircraft 23-003 thru 23-069 not modified by SK23/24-213.

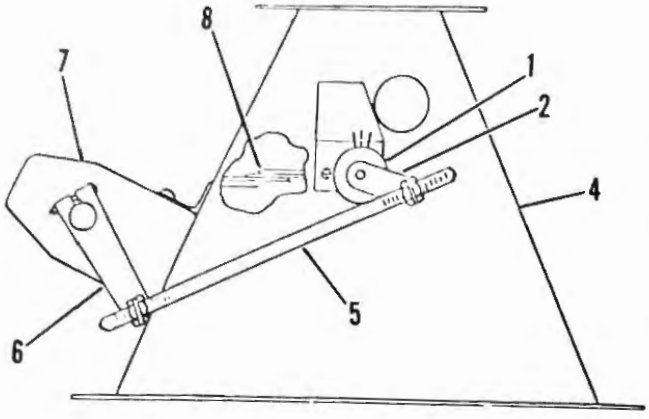

Aircraft 23-070 thru 23-099 not modified by SK23/24-213.

DAMPER SHOWN IN FULLY CLOSED POSITION

Aircraft 23-003 thru 23-099 when modified by SK23/24-213.

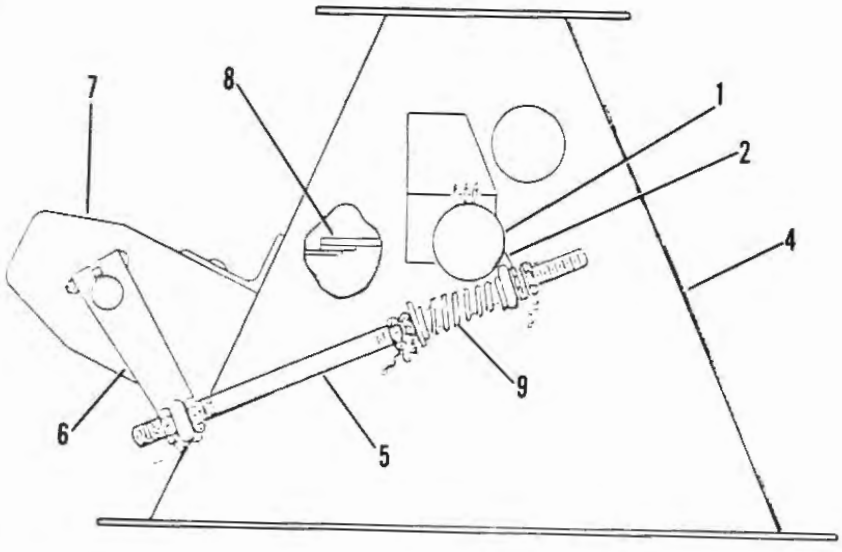

1. Potentiometer
2. Potentiometer Arm
3. Link
4. Damper Box
5. Adjustment Rod
6. Actuator Arm
7. Actuator
8. Damper
9. Spring

Figure 4-8. Damper Rigging

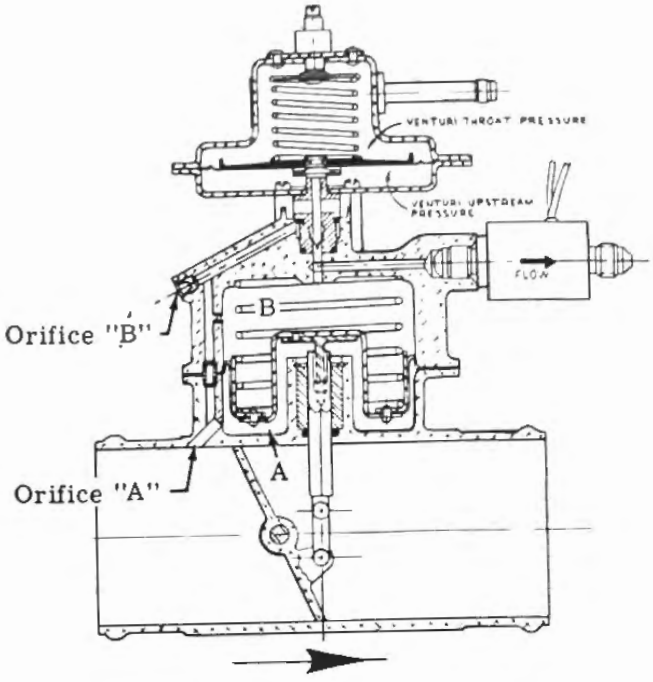

Figure 4-9. Cross Section Flow Control Valve

CABIN ALTITUDE CONTROLLER. The controller, mounted on the instrument panel, is a case contained unit. It is vented to cabin pressure and has no pneumatic connections. It is electrically connected to the power source, to the air exhaust control valve through the pressurization and [A] cabin under pressure switch. The controller contains an adjustable transducer which senses cabin altitude, a second transducer which senses cabin altitude rate, a rate adjusting potentiometer, and a servo amplifier which operates the cabin air discharge valve.

a. Operation. Before takeoff, the pilot selects the cabin pressure altitude with the BARO knob. This knob actuates a pointer on the 0 to +9000-foot dial. A second scale on the dial indicates flight altitudes corresponding to cabin altitudes for the maximum operating cabin differential. The cabin altitude rate is selected by the RATE knob. Normally, the RATE knob is left in a detented, marked position, which corresponds to preselected values of climb and descent. As the aircraft climbs, cabin pressure will increase at the selected (or preset) rate to the selected altitude. When the pilot wishes to descend for landing, he sets the altimeter setting number in the subdial by pulling out the BARO knob and turning it to the corrected sea level pressure (same operation as an altimeter). The local airport altitude is then set up on the cabin altitude scale. This will cause the cabin pressure to go to field altitude pressure at a controlled rate. Should the selected altitude require a cabin differential pressure greater than allowable or a negative differential, the exhaust valve will override the controller and maintain this differential within prescribed limits. On [A], the cabin under pressure switch (aneroid), electrically connected between the open and closed sides of the exhaust valve, protects against cabin depressurization due to a cabin altitude controller malfunction or an electrical wiring short. When the cabin pressure reaches 10,000 feet, the aneroid switch activates, removing the signal from the open side and completes the circuit to the closed side of the exhaust valve. The exhaust valve will remain closed until cabin pressure returns to normal. With cabin pressure normal, the aneroid switch deactivates, removing the signal from the closed side and completes the circuit to the open side of the exhaust valve. If the malfunction continues, the aneroid switch will alternately switch signals until corrective action is taken.

RATE CALIBRATION PROCEDURE - CABIN ALTITUDE CONTROLLER. (See figure 4-12.) Rapid and abnormal depressurization of the aircraft cabin, due to system malfunction, may necessitate recalibration of the cabin altitude controller. Cabin pressure fluctuation caused by controlled "hunting" is an indication that recalibration is required. In case the above exists, recalibrate the cabin altitude controller as follows:

a. Remove the cabin altitude controller from the instrument panel.
b. Remove slothead screws and lockwashers (3) around electrical connector (4).
c. Remove allen screws and lockwashers (2) and remove the can exposing the rate sensor mechanism and amplifier. Do not loosen screws (1).
d. With the can removed, connect the controller as shown under TEST WIRING.
e. Connect a VTVM and/or oscilloscope from pin G (Hi) to Gnd (Lo).
f. Set the function test switch to TEST CLIMB and apply 115-volt 400-cps to pin A.
g. Turn the dial until the best null indication is obtained.
h. Connect the VTVM and/or oscilloscope from pin C (Hi) to Gnd (Lo) to observe the rate sensor output.
i. Set the function test switch to NORMAL.
j. The VTVM and oscilloscope should indicate a null with the following limits:

Total output	= 50 mv max.
400 cps component	= 25 mv max.

k. If the rate sensor output exceeds the above limits, adjust the three push-pull screws (5 and 6) on the rate capsule to obtain the best possible null indication.

Note

Take care to maintain approximate equal torque on screws (5 and 6). After the screw setting is changed, apply a drop of "Glyptol" to prevent slippage.

l. Turn off all power and reinstall the can on the instrument. When screws (2 and 3) have been tightened, reconnect the controller as shown under TEST WIRING.

[A] Aircraft 23-003 thru 23-099 modified by SK23/24-294.

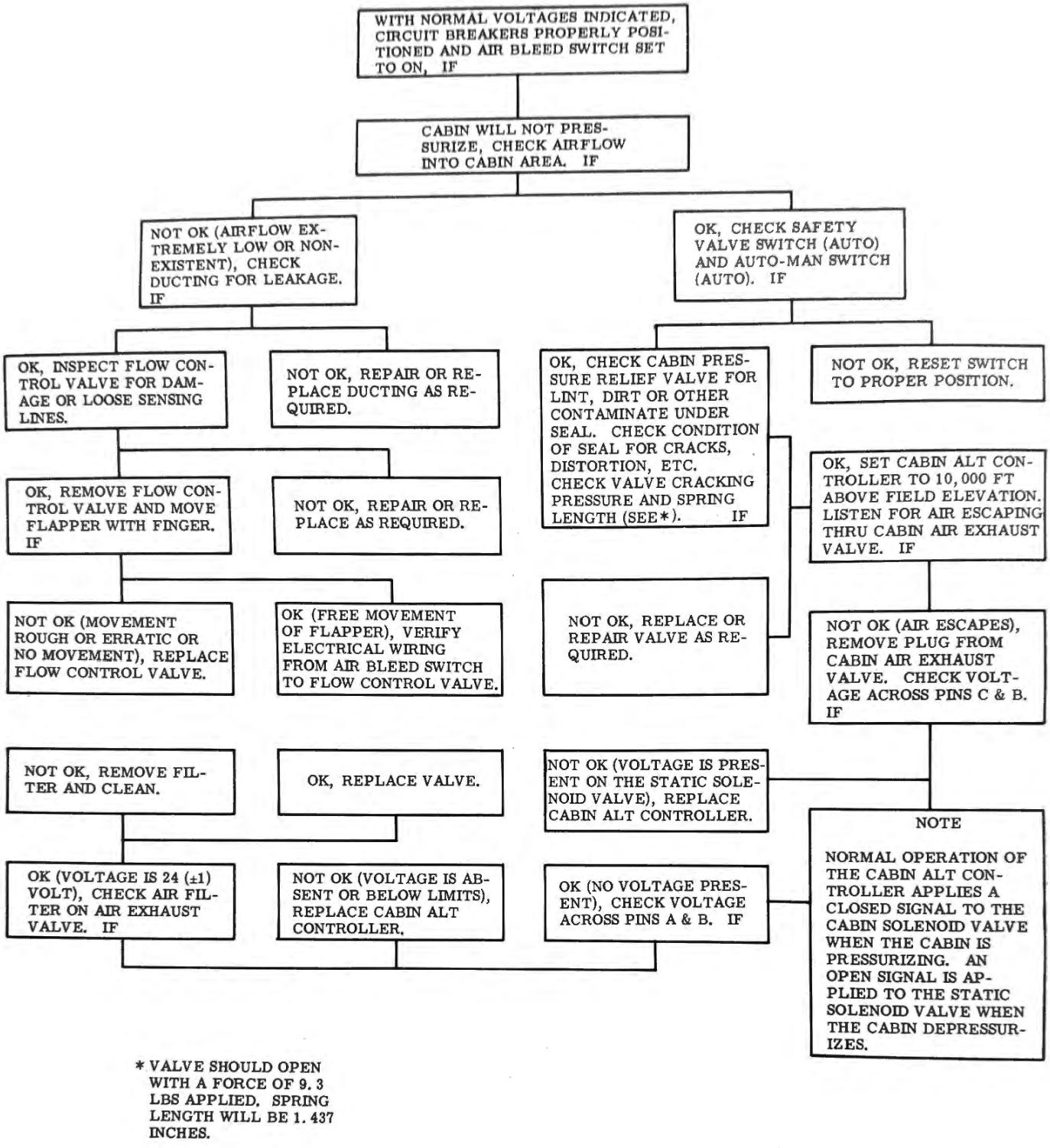

Figure 4-10. Cabin Pressurization System Trouble Shooting

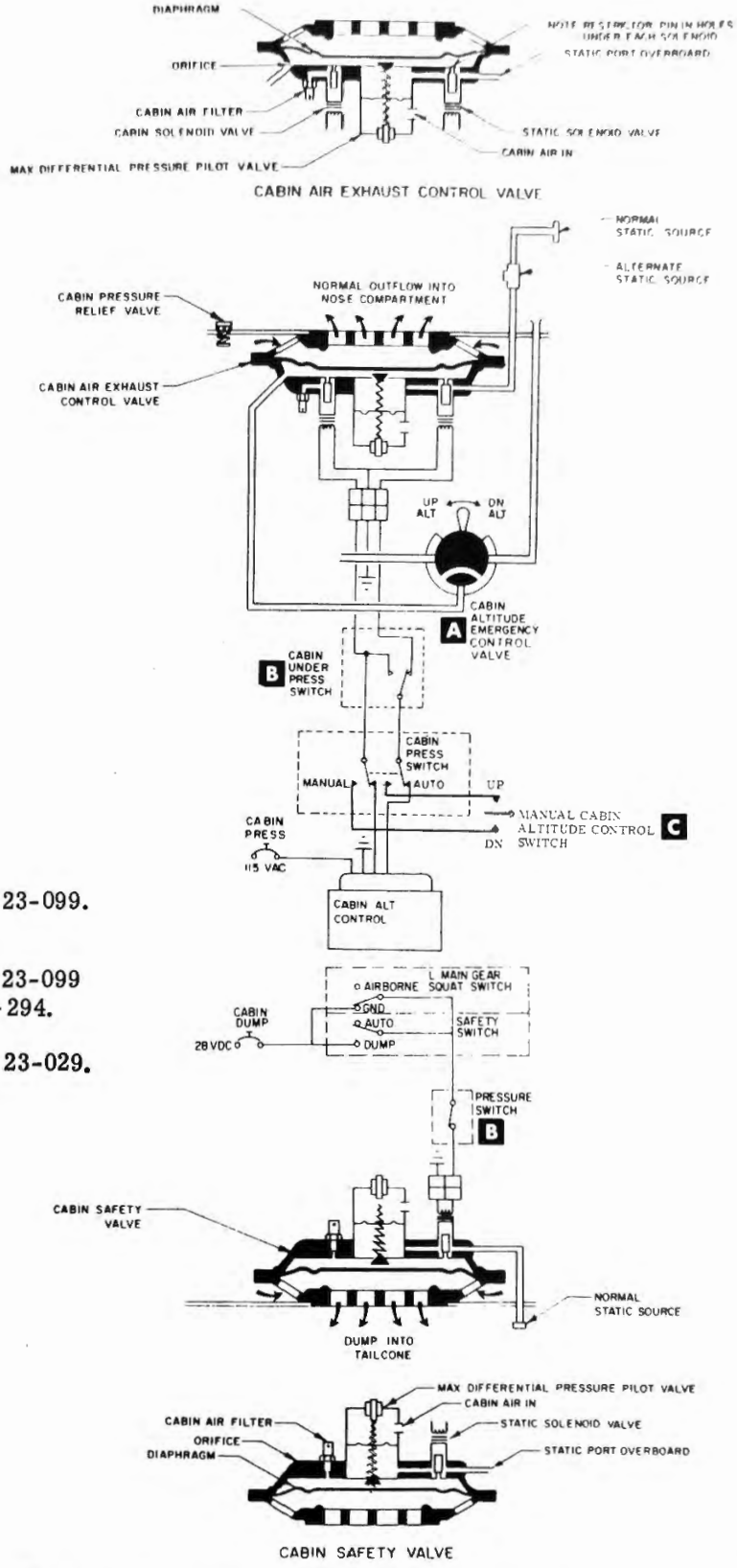

A Aircraft 23-030 thru 23-099.

B Aircraft 23-003 thru 23-099 Modified by SK23/24-294.

C Aircraft 23-003 thru 23-029.

Figure 4-11. Cabin Pressurization System Control Schematic

m. With the function test switch set to NORMAL and the dial set at its null position, connect the VTVM and/or oscilloscope from pin D (Hi) to Gnd (Lo).

n. Adjust the rate balance potentiometer (located in the upper left corner of the instrument face) until the best possible null is obtained.

Note

This adjustment takes care of any offset due to mechanical distortion as the screws are tightened.

o. Disconnect test wiring and reinstall controller in aircraft.

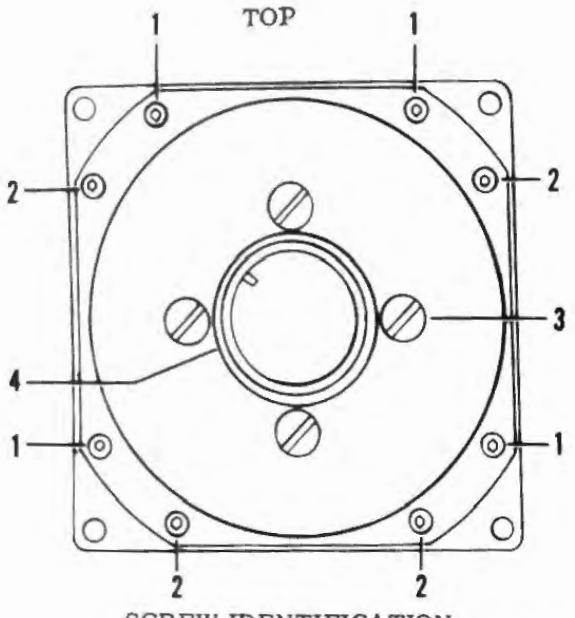

SCREW IDENTIFICATION

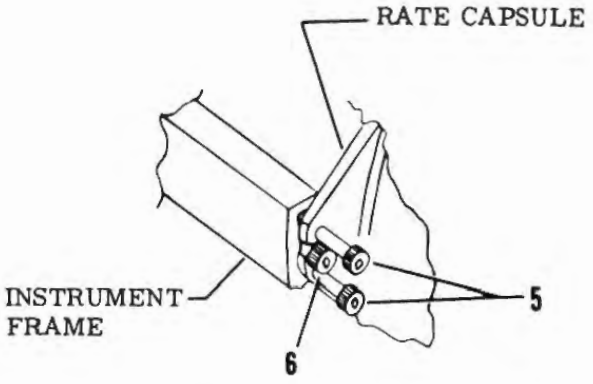

RATE CAPSULE ADJUSTMENT

1. Allen Screws
2. Allen Screws and Lockwasher
3. Slot Head Screws and Lockwasher
4. Electrical Connector
5. Push Screws
6. Pull Screw

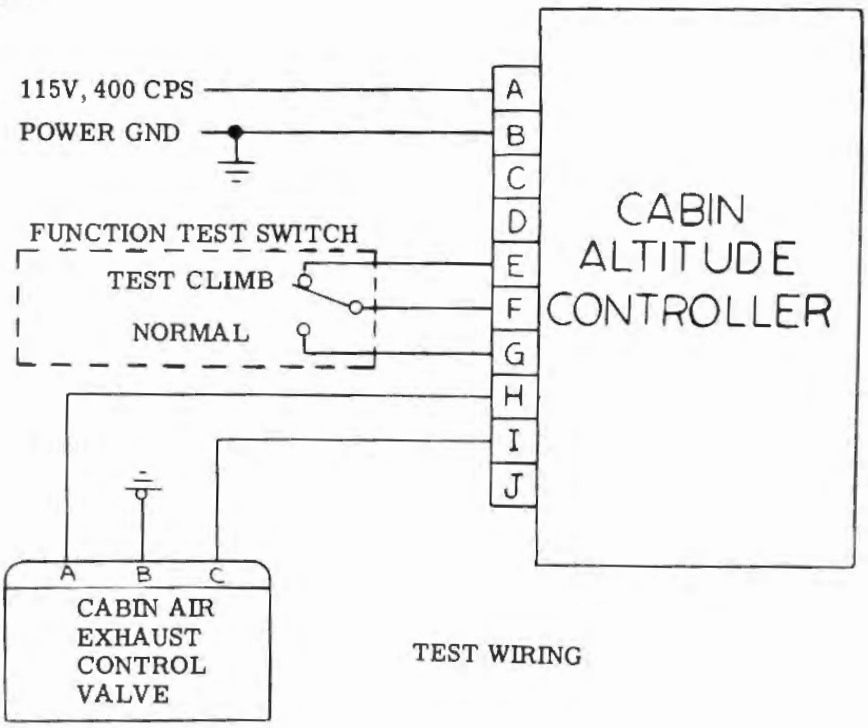

TEST WIRING

Figure 4-12. Calibration of Cabin Altitude Controller

CABIN AIR EXHAUST CONTROL VALVE. (See figure 4-13.) This valve, located forward of the cockpit in frame 5, maintains desired cabin pressure by controlling cabin air exhaust flow. It receives control signals from the cabin altitude controller.

a. Normal Control Operation. Signals from the cabin altitude controller and cabin rate sensor are combined and amplified to give voltages which call for either an exhaust valve close signal (lower cabin altitude) or an exhaust valve open signal (higher cabin altitude). There is a small dead band of about 30 feet where no signal is present. When a valve close signal is called for, the cabin air solenoid opens and cabin air is bled through a small calibrated orifice into the reference chamber. This slowly closes the outflow path under the main diaphragm. When a valve open signal is called for, the static solenoid opens and the reference pressure is bled through a calibrated orifice to static. This slowly opens the outflow path. When desired cabin pressure is attained, both solenoids close and there is no cabin airflow through the reference chamber. When the controller is calling for a cabin altitude which is so low compared to the flight altitude that maximum differential pressure is approached, the cabin air solenoid opens and the static solenoid closes. In this condition, the maximum differential pressure pilot valve opens and allows the air in the reference chamber to exhaust at a much greater rate than the cabin air entering through the calibrated orifice. Therefore, the maximum differential pressure pilot valve exerts priority over any signals from the controller and assures maximum differential pressure limitation even in case of electrical malfunction.

b. Emergency Procedures **A**. If it is desirable to depressurize in flight, set the AUTO-MAN switch on the instrument panel to MAN pressurization. This removes the cabin altitude controller, rate sensor, and amplifier from the system and transfers control directly to the manual spring-loaded cabin altitude switch. If the switch is held in the UP or INCREASE position, the static solenoid is electrically opened and the main valve slowly opens as the reference chamber bleeds to static. It will stay open when the switch is released even though the solenoid valve closes. Should the pilot subsequently dive the aircraft to attain a safe cabin pressure, the low pressure trapped in the reference chamber assures that the main valve will remain open to prevent negative differential pressure from occurring. Should the cabin controller, rate sensor, or amplifier malfunction and cause pressurization loss at altitude, the pilot can manually hold the switch to DOWN or DECREASE. This will bleed cabin air into the reference chamber, closing the main valve and restoring cabin pressure. By operating the switch between UP and DOWN (INCREASE and DECREASE), any cabin pressure can be obtained. **B** A manual cabin altitude control valve is installed to provide emergency cabin control in case of complete aircraft electrical failure. When the valve is set to the DN ALT position, cabin pressure is admitted to the reference chamber. This slowly closes the outflow path under the main diaphragm and allows the cabin to pressurize. When the valve is set to the UP ALT position, reference chamber pressure is bled to static. This slowly opens the outflow path and allows the cabin to depressurize.

c. Emergency Procedures **C**. If it is desirable to depressurize in flight, set the AUTO-MAN switch on the instrument panel to MAN pressurization. This removes the cabin altitude controller, rate sensor, and amplifier from the system. The manual cabin altitude control valve is set to the UP ALT position. This allows reference chamber pressure to be bled to static. This slowly opens the outflow path and allows the cabin to depressurize. Setting the valve to the DN ALT position, cabin pressure is admitted to the reference chamber. This slowly closes the outflow path under the main diaphragm and allows the cabin to pressurize.

CABIN ALTITUDE EMERGENCY CONTROL VALVE **D**. (See figure 4-11.) A manual cabin altitude emergency control valve is installed on the instrument panel and is plumbed to the cabin air exhaust valve, to atmospheric pressure and to cabin pressure. The valve provides emergency control of cabin pressure in case of complete aircraft electrical failure. Setting the valve to UP ALT applies static pressure to the reference chamber of the exhaust valve, allowing the cabin to depressurize. Setting the valve to DN ALT applies cabin pressure to the reference chamber of the exhaust valve, allowing the cabin to pressurize. For additional information of cabin exhaust valve, (refer to CABIN AIR EXHAUST CONTROL VALVE, this section.)

CABIN SAFETY VALVE. (See figures 4-13 and 4-14.) The cabin safety valve, located aft of the baggage compartment in frame 22, is entirely separate from the cabin altitude control system. It serves the following safety function in case of cabin altitude control system malfunction.

a. It acts as a relief valve for differential pressure should the differential exceed 0.2 psi above the normal setting of the cabin altitude control system.

b. Should the cabin pressure ever decrease below the outside pressure (as in the case of a dive with the discharge valve too far closed), the safety valve acts as a check valve and prevents negative differential.

c. **E** The safety valve incorporates a solenoid valve which is electrically controller by either the safety valve dump switch or the left squat switch. This valve connects static pressure to the reference chamber and thus fully opens the safety valve, depressurizing the cabin in case of emergency.

d. **F** The safety valve incorporates a solenoid valve which is electrically controlled by either the left squat switch or the safety valve dump switch through an aneroid switch. During climb the aneroid switch opens at 10,000 feet, removing the safety valve solenoid from the squat switch and safety valve dump switch circuit. The safety valve will then function only by pressure differential (see steps a and b). During descent the aneroid switch closes at 8000 feet, completing the circuit.

A Aircraft 23-003 thru 23-039.
B Aircraft 23-030 thru 23-039.
C Aircraft 23-040 thru 23-099.
D Aircraft 23-030 thru 23-099.
E Aircraft 23-003 thru 23-099 except aircraft modified by SK23/24-294.
F Aircraft 23-003 thru 23-099 modified by SK23/24-294.

CABIN SAFETY VALVE DUMP SWITCH - FUNCTIONAL TEST. (Aircraft 23-003 thru 23-099 not modified by SK23/24-294.) During normal control of aircraft pressure by the cabin altitude controller, the functioning of the cabin safety valve dump circuit through the squat switch is not evident. In accordance with current inspection requirements, Section VIII, the squat switch dump circuit and the Safety Valve Dump-Auto Switch should be functionally checked as follows:

a. Block left squat switch.
b. Start one engine in accordance with Airplane Flight Manual. Set engine at 60% rpm.
c. Pressurize cabin to 0.5 psi.
d. Set Safety Switch to DUMP. Cabin pressure should drop to zero psi.
e. Set Safety Switch to AUTO. Cabin pressure should return to 0.5 psi.
f. Remove block from squat switch. Cabin pressure should drop to zero.
g. Shut down engine.

CABIN SAFETY VALVE ANEROID SWITCH AND CABIN DUMP SWITCH - FUNCTIONAL TEST. (Aircraft 23-003 thru 23-099 modified by SK23/24-294.) During normal control of aircraft pressure by the cabin altitude controller, the functioning of the cabin safety valve aneroid is not evident. It is recommended that in accordance with current inspection requirements, Section VIII, the cabin safety valve aneroid switch circuit and the cabin dump switch circuit be functionally checked as follows:

a. Block the left landing gear squat switch. This will simulate an inflight condition.
b. Remove tailcone access door.
c. Attach a vacuum source, including a vacuum gage, to the safety valve static port located at frame 25.

Note

During the following steps, a sudden loss of vacuum will indicate that pressure switch actuation has occurred.

d. Evacuate the system until the vacuum gage indicates 19.03 inches of Hg Abs. (12000 feet above S. L.). Block vacuum source. Remove block from squat switch and check that pressure switch actuation has not occurred.

F Aircraft 23-003 thru 23-099 modified by SK23/24-294

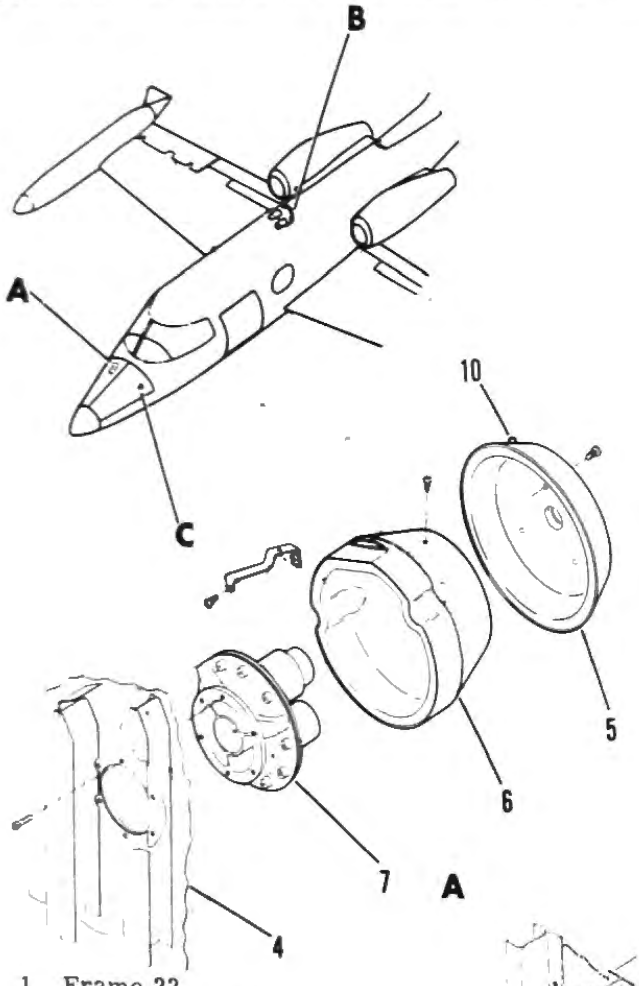

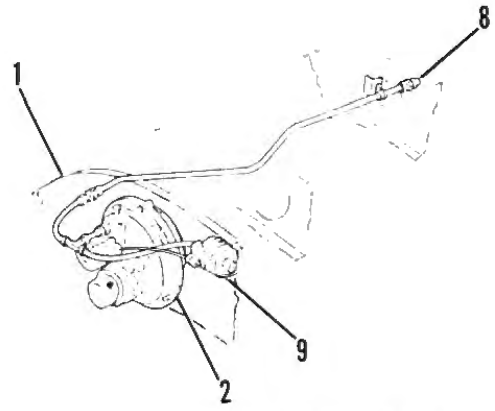

Aircraft 23-003 thru 23-099 Modified by SK23/24-294.

B

Aircraft 23-003 thru 23-099 Except Aircraft Modified by SK23/24-294.

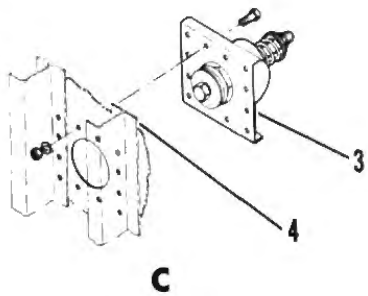

C

1. Frame 22
2. Cabin Safety Valve
3. Cabin Pressure Relief Valve
4. Frame 5
5. Baffle Top
6. Baffle Base
7. Cabin Exhaust Valve
8. F Safety Valve Static Port
9. F Safety Valve Pressure Switch (Aneroid)
10. F Cabin Under Pressure Switch (Aneroid)

Figure 4-13. Cabin Pressurization System Components Installation

e. Block the left landing gear squat switch.
f. Slowly release vacuum until vacuum gage indicates 24.00 inches of Hg Abs. (6000 feet above S. L.). Remove block from squat switch and check that pressure switch actuation has occurred.
g. Block the left landing gear squat switch.
h. Evacuate the system until the vacuum gage indicates 19.03 inches of Hg Abs. Block vacuum source and remove block from left squat switch.
i. Set Cabin Safety Switch to DUMP. Check that pressure switch actuation has not occurred.
j. Set Cabin Safety Switch to AUTO.
k. Slowly release vacuum until vacuum gage indicates 24.00 inches of Hg Abs. Remove block from squat switch.
l. Set Cabin Safety Switch to DUMP. Check that pressure switch actuation has occurred.
m. Remove vacuum source and secure tailcone access door.

CABIN PRESSURE RELIEF VALVE. (See figure 4-13.) A cabin pressure relief valve is installed in frame 5 to prevent a cabin overpressure condition from occurring. The spring-loaded type valve is preset to relieve at a pressure differential of 9.3 psig.

CABIN PRESSURE WARNING SYSTEM. Cabin pressure warning is provided by an aneroid pressure switch installed in the pressurized cabin. When the cabin altitude reaches 10,000 feet, this switch completes a circuit and an aural warning is sounded. The crew can then take corrective measures. A CABIN ALTITUDE TEST switch is installed on the pilot's sub-panel or pedestal to allow the cabin pressurization circuit to be tested prior to takeoff.

REMOVAL AND INSTALLATION OF PRESSURIZATION SYSTEM COMPONENTS. Removal and installation of pressurization system components should be performed as shown in the exploded view sequence of figure 4-13.

PERI-SEAL CONNECTOR [A]. (See figures 4-7 and 4-15.) The Peri-Seal connector consists of a stainless steel housing and two Peri-Seal sealing elements. The assembly is installed on the duct between the pylon firewall and bleed air manifold.

[A] Aircraft 23-003 thru 23-079

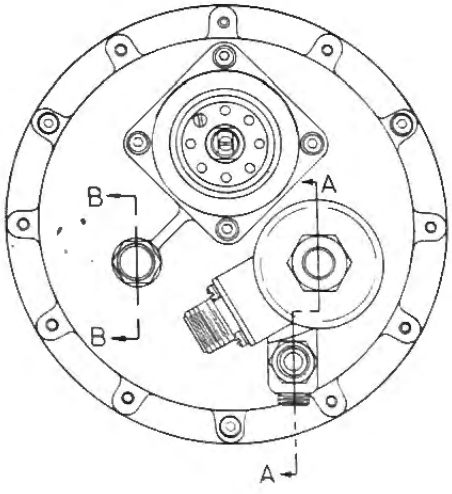

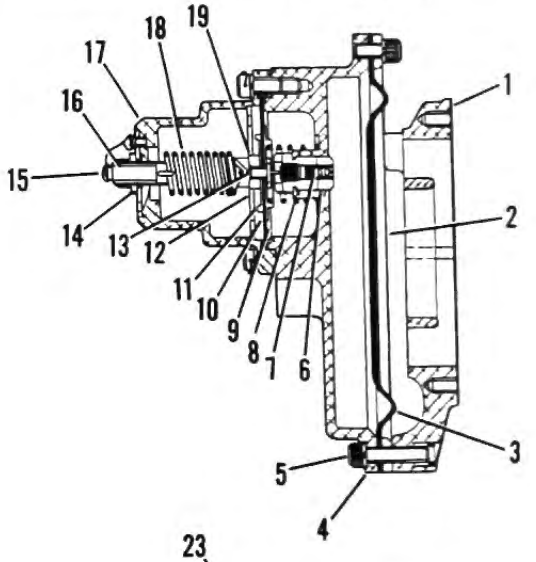

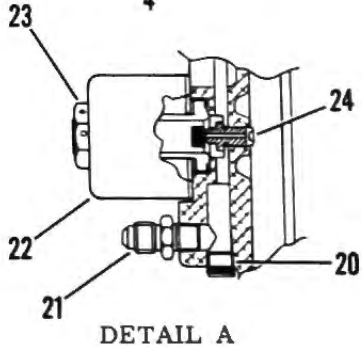

DETAIL A

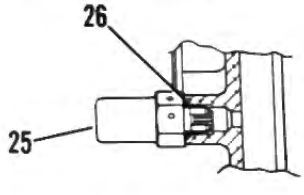

DETAIL B

1. Mounting Casting
2. Ring
3. Diaphram
4. Housing
5. Screw
6. Adapter
7. Valve
8. Spring
9. Disk (Bottom)
10. Diaphram
11. Disk (Top)
12. Plate
13. Screw
14. Nut
15. Screw
16. Adjusting Screw
17. Housing
18. Spring
19. Nut
20. Plug
21. Fitting
22. Solenoid Valve
23. Nut
24. Insert
25. Filter
26. O-Ring

Figure 4-14. Cabin Safety Valve Cross Section

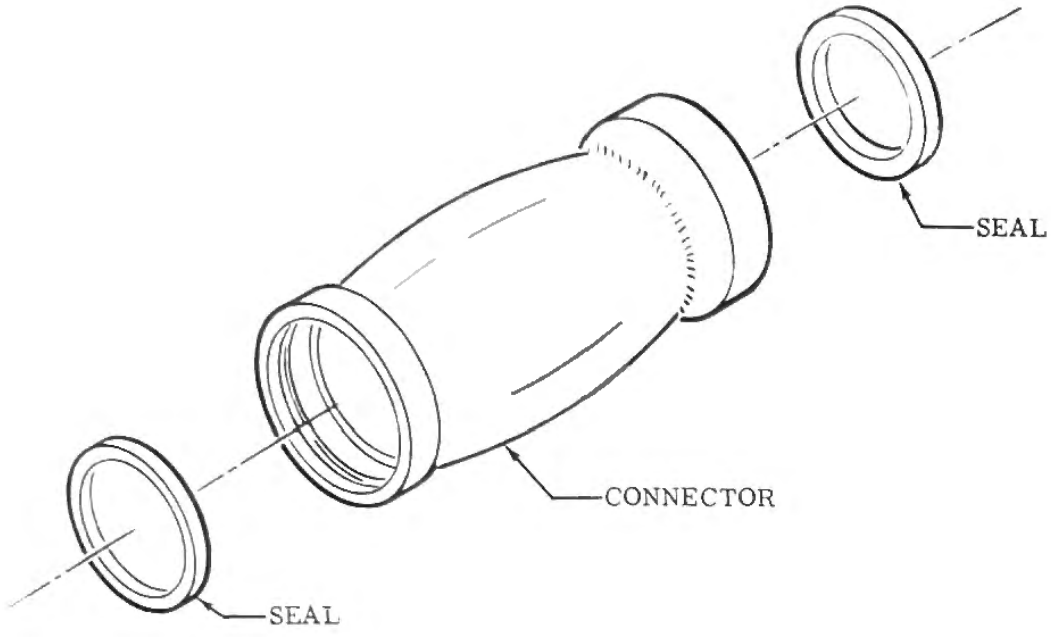

A Figure 4-15. Peri-Seal Connector

PERI-SEAL CONNECTOR REMOVAL AND INSTALLATION.

a. Remove Peri-Seal connector from aircraft and extract Peri-Seal from housing with dull, flat tool.

b. Clean housing using toluene or a methyl ethyl ketone (MEK) base solvent. Assure that no foreign matter remains in housing and dry thoroughly.

c. Inspect housing for burrs in Peri-Seal grooves.

d. Install Peri-Seals on both ends of housing.

Note

Peri-Seals are symmetrical; therefore, no special instructions are required as to position or seating of the Peri-Seal.

e. Inspect mating duct ends. Assure that they are clean and free from burrs and sharp edges.

f. Install Peri-Seal Connector.

Note

Offset (lateral misalignment) of the centerline of the mating duct ends must be kept to a minimum of ±0.125 inch to obtain maximum service life.

WINDSHIELD DEFOG SYSTEM. (See figures 4-16 and 4-17.) Windshield defogging is accomplished by 1) directing engine bleed air over the outside of the windshield, 2) by directing engine bleed air over the inside of the windshield, and 3) by allowing conditioned cabin air to flow between the dual windshield panes.

a. Operation. With engine bleed air on and the DEFOG switch in the DEFOG position, bleed air is routed to the outlets forward of each windshield half, to the outlet forward of the glareshield and the footwarmers. The amount of air routed over the outside of the windshield halves is governed by the position of the pilot's EXT DEFOG PULL and the optional copilot's EXT DEFOG PULL controls. Airflow over the interior of the windshield halves is governed by the position of the INT DEFOG PULL control. A thermo switch installed in the external defog ducting will energize a warning light on the readout panel when the temperature reaches 205° F. When the temperature drops to 180° F, the light will deenergize. The water accumulator, installed in the external defog ducting forward of frame 5, prevents any accumulation of water from entering the internal ducting from the external outlets. The accumulators are vented overboard through the floor of the nose section. A check valve is installed between the internal and external defog ducting to prevent cabin depressurization in the event of pressurization system failure. B A thermo switch in the heat distribution tube automatically closes the defog shutoff valve (via the defog relay) when the temperature reaches 205° F. The defog relay is deenergized when the temperature drops to 180° F.

b. The conditioned cabin air is routed through a desiccant-type clear plastic dehumidifier before it is directed between the windshield panes.

A Aircraft 23-003 thru 23-079.

B Aircraft 23-003 thru 23-008

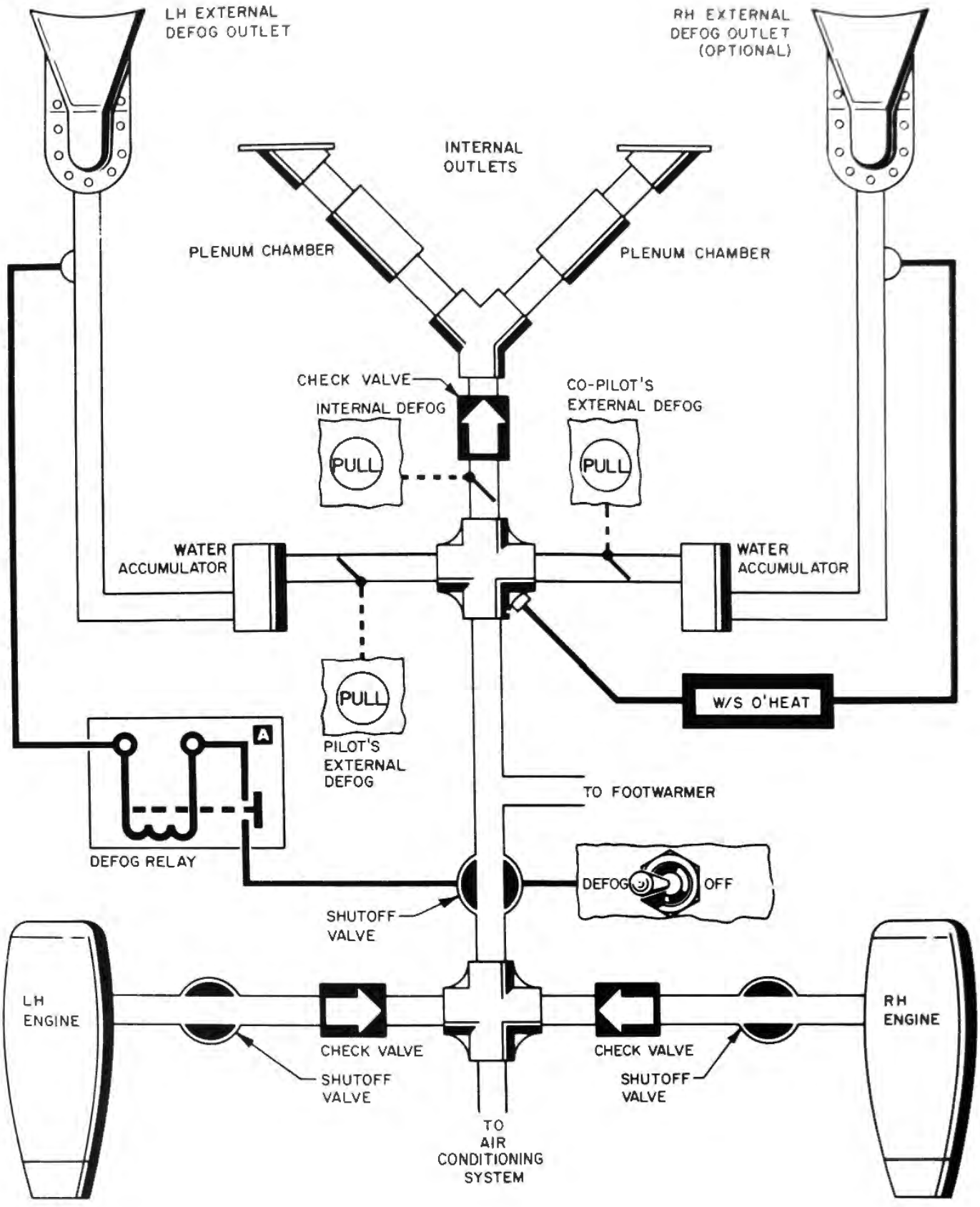

A Aircraft 23-003 thru 23-008

Figure 4-16. Defog System Schematic

1. Tube Assembly
2. Copilot's Internal Defog Outlet
3. Pilot's Internal Defog Outlet
4. Internal Control Valve
5. [A] Copilot's External Defog Outlet
6. [A] Water Accumulator
7. [A] Thermal Switch
8. [A] Copilot's External Defog Hose
9. Pilot's External Defog Hose
10. [A] Copilot's External Defog Control
11. Bleed Air External Defog Hose
12. Footwarmer Hose
13. [B] Plenum Chamber
14. Internal Defog Control
15. Pilot's External Defog Control
16. Footwarmer
17. [C] Thermal Switch
18. Thermal Switch
19. Water Accumulator
20. Pilot's External Defog Outlet

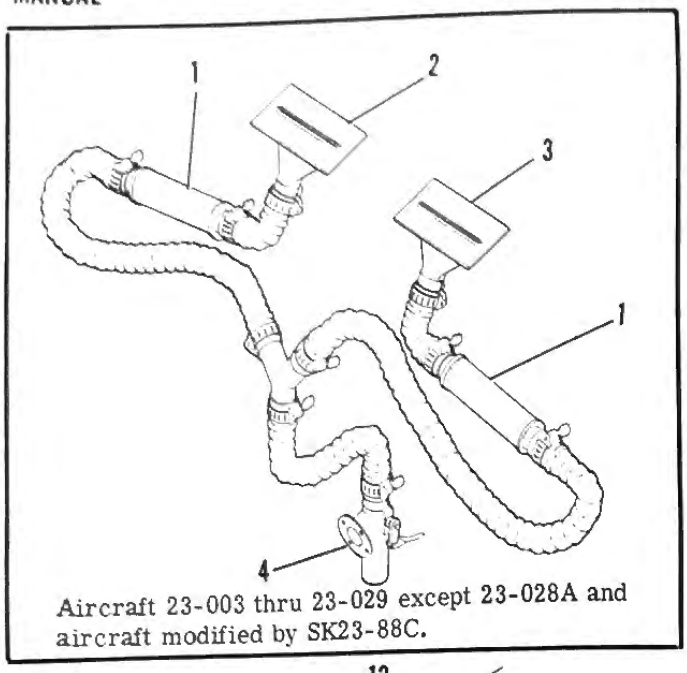

Aircraft 23-003 thru 23-029 except 23-028A and aircraft modified by SK23-88C.

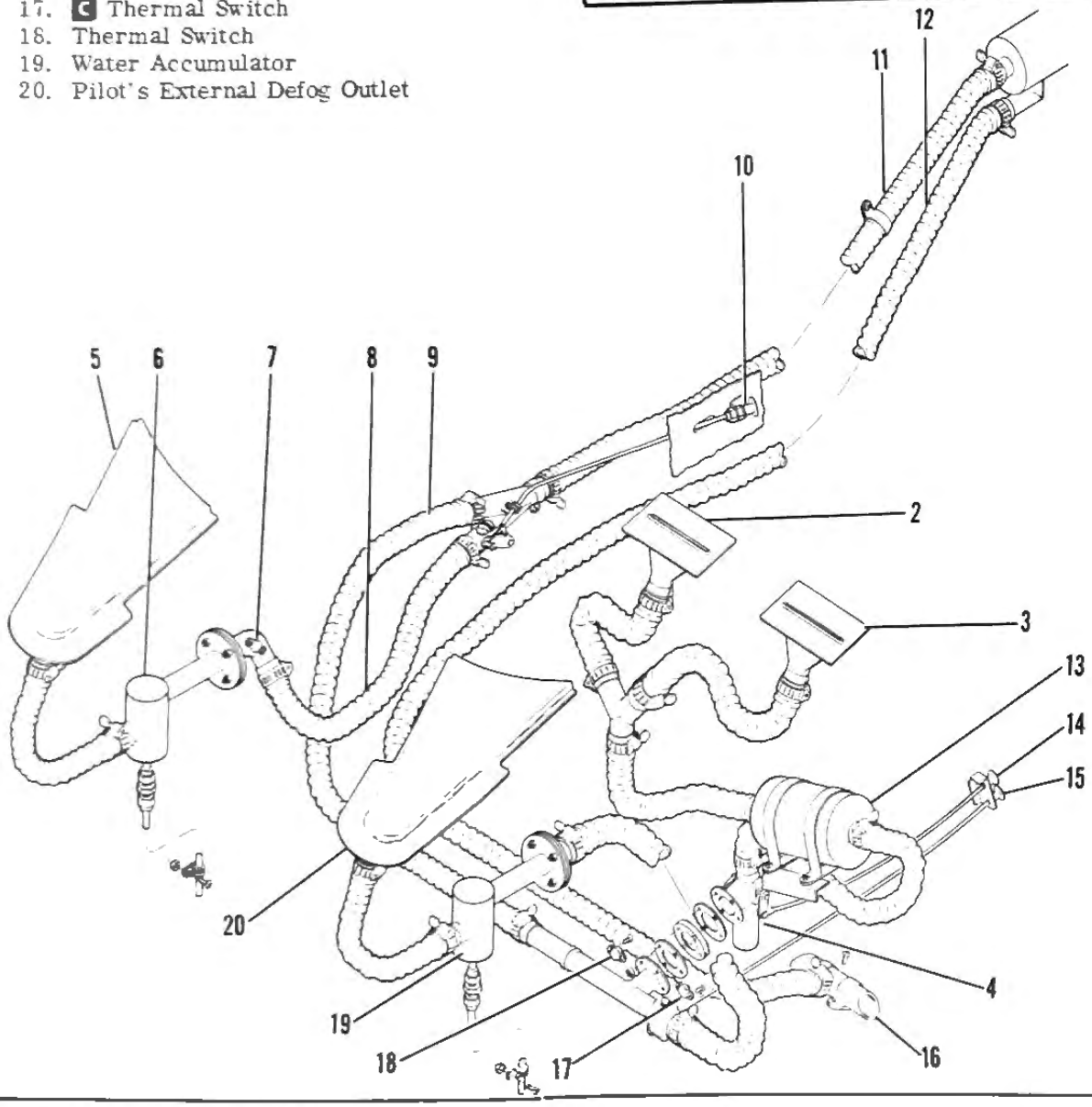

[A] Aircraft 23-003 thru 23-099 when modified by SK23-131A.

[B] Aircraft 23-028A and 23-030 thru 23-099 and aircraft modified by SK23-88C.

[C] Aircraft 23-003 thru 23-011

Figure 4-17. Defog System Components Installation

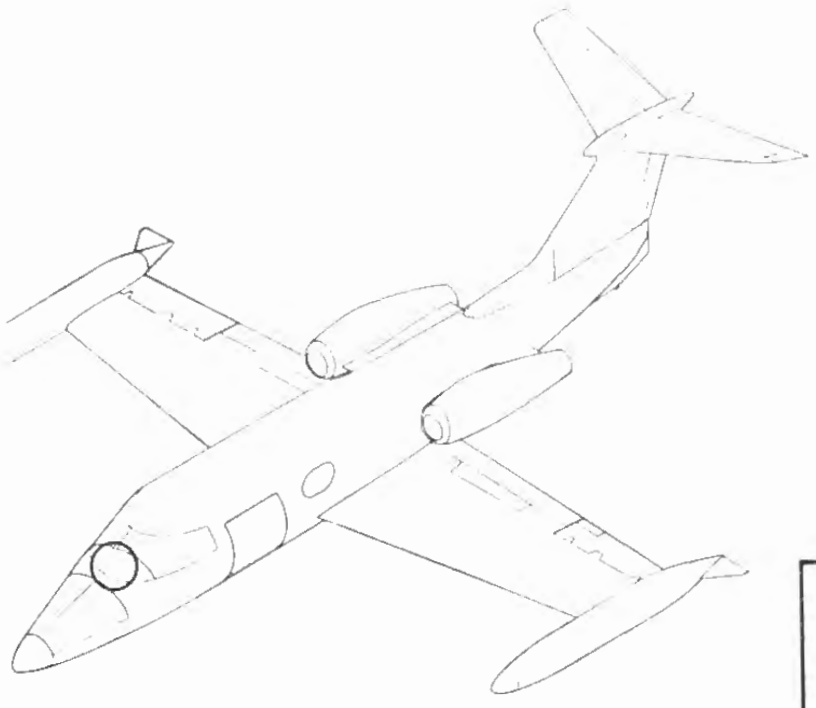

1. Tube Assembly
2. Hose
3. Dehumidifier
4. Clamp
5. Frame 5
6. Floorboard
7. Tube
8. Windshield

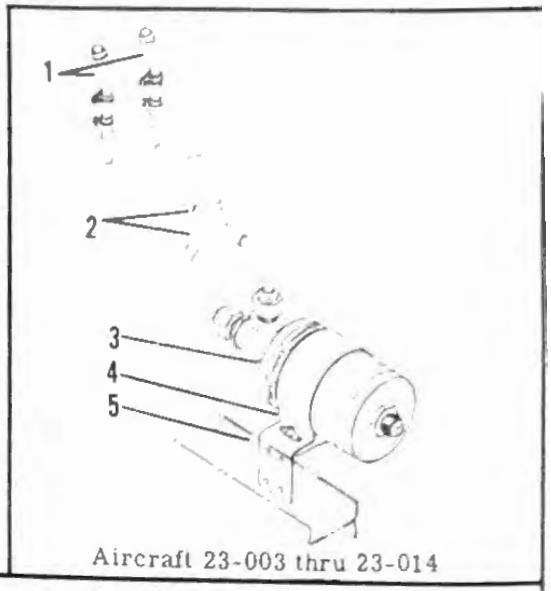

Aircraft 23-003 thru 23-014

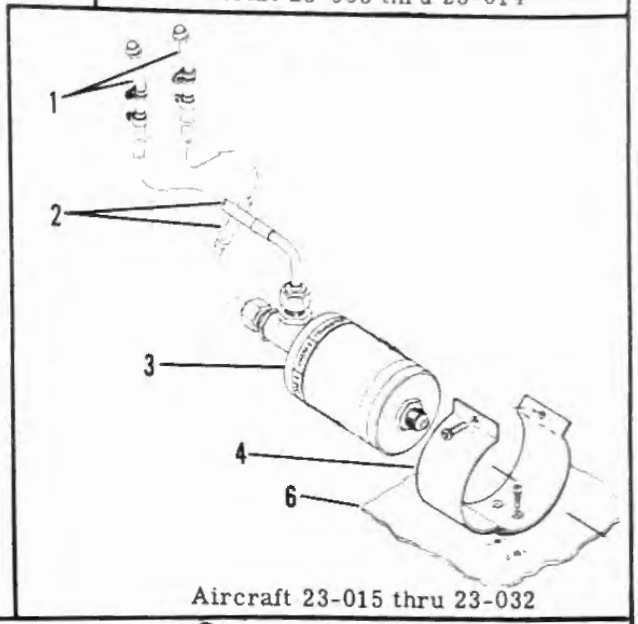

Aircraft 23-015 thru 23-032

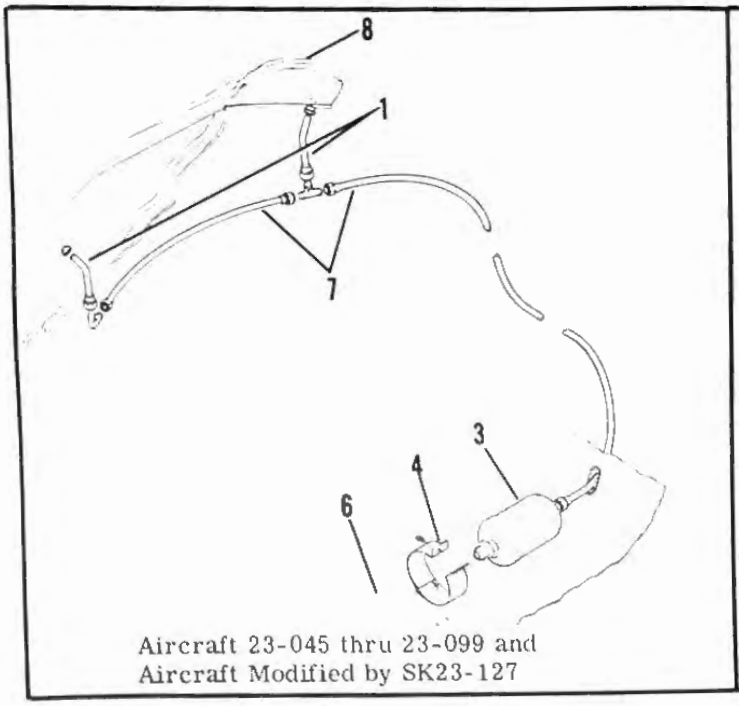

Aircraft 23-045 thru 23-099 and
Aircraft Modified by SK23-127

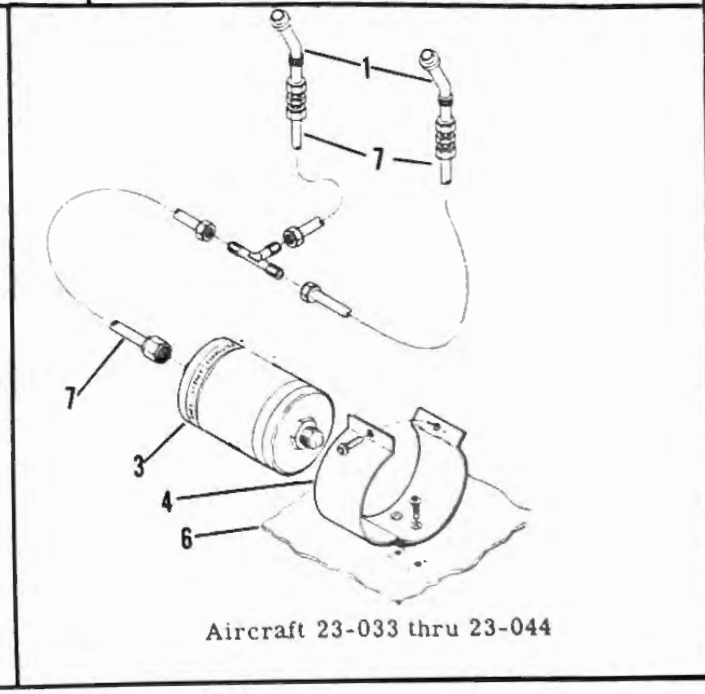

Aircraft 23-033 thru 23-044

Figure 4-18. Windshield Dehumidifier Installation

W/S O'HEAT WARNING LIGHT - FUNCTIONAL CHECK.

a. Start one engine in accordance with the Aircraft Flight Manual.
b. Set air bleed switch to OFF.

CAUTION

With the aircraft in a static condition, extended engine operation with the air bleed switch set to ON will cause damage to the aircraft air conditioning components.

c. Set DEFOG switch to DEFOG and hold until maximum airflow is obtained.
d. Position defog-normal control knob to DEFOG.
e. Position a high temperature thermometer (300° F) in LH external outlet (assure thermometer bulb does not contact any metal). When temperature reaches 205° F, the W S O'HEAT warning light on the readout panel will light.

Note

If light does not light, check wires for loose connections. If wires are connected properly, replace thermal switch.

f. Set DEFOG switch to OFF and hold until airflow stops. The W S O'HEAT warning light will go out when the temperature reaches 180° F.
g. Shut engine down in accordance with Aircraft Flight Manual.

WINDSHIELD DEFOG SYSTEM REMOVAL AND INSTALLATION. Removal and installation of the windshield defog system should be performed as shown in the exploded view sequence of figure 4-17.

DEFOG DEHUMIDIFIER. (See figure 4-18.) The dehumidifier is installed to dry the conditioned cabin air before it is routed between the windshield panes.
a. Dehumidifier Replacement **A**. The dehumidifier should be checked at least every 3 flight hours. A greenish-yellow or yellow color indicates the dehumidifier should be replaced.
b. Dehumidifier Replacement **B**. The dehumidifier should be replaced when an indication of moisture is present between the windshield panes.
When installing the dehumidifier, apply a light film of Molydenium Disulfide and Graphite Solid Film Lubricant (manufactured by Lubri-Bond "A" Electrofilm, N. Hollywood, Calif), or equivalent, to the threads of dehumidifier ports. Do not allow lubricant to obstruct port openings.

DEFOG DEHUMIDIFIER INSTALLATION AND REMOVAL. Removal and installation of defog dehumidifier system components should be performed as shown in the exploded view sequence of figure 4-18.

A Aircraft 23-003 thru 23-044 except aircraft modified by SK23-127.

B Aircraft 23-045 thru 23-099 and aircraft modified by SK23-127.

WINDSHIELD ICE DETECTION SYSTEM (IF INSTALLED). (See figure 4-18A.) The windshield ice detection system consists of two red light assemblies mounted on the glareshield and two circuit breakers in the armrest circuit breaker panel. The light on the pilot's side is located in an area which is cleared by the windshield defog airflow system. The light on the copilot's side is located in an area outside the windshield defog airflow system. These locations are such that if the windshield defog system is in operation, there will still be an indication available on the copilot's side.
a. Operation. Setting the battery switch to ON applies 28 vdc through individual circuit breakers to its respective light. When particles of ice or moisture form, light refraction takes place resulting in the appearance of two red areas, approximately 1 1/2 inches in diameter, on the windshield.

REMOVAL OF WINDSHIELD ICE DETECTOR. (See figure 4-18A.)
a. Lower either pilot's or copilot's flight panel, depending which light assembly is to be removed.
b. Locate ice detector wiring and disconnect at splice.
c. Loosen screws and remove ice detector assembly from aircraft.

INSTALLATION OF WINDSHIELD ICE DETECTOR. (See figure 4-18A.)
a. Position ice detector assembly in its original position and tighten screws.
b. Splice light wiring to aircraft wiring.
c. Raise and secure applicable flight panel.

REPLACEMENT OF ICE DETECTOR LIGHT. (See figure 4-18A.)
a. Loosen screws and remove ice detector assembly.
b. Rotate ice detector assembly sufficiently to gain access to bulb.
c. Remove red lens and bulb from ice detector assembly.
d. Install new bulb.
e. Position ice detector assembly in its original location and tighten screws.

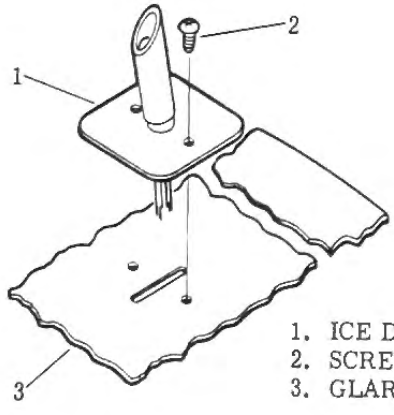

1. ICE DETECTOR (TYP)
2. SCREW
3. GLARESHIELD

Figure 4-18A. Windshield Ice Detector

OXYGEN SYSTEM. (See figure 4-19.) The oxygen system consists of a high pressure storage cylinder, shutoff valve assembly, pressure regulator assembly, two diluter demand masks, seven passenger masks, seven lanyard-operated shutoff valves, three door actuator valves, an overboard discharge port, two manual shutoff valves, a solenoid valve, an aneroid switch, and a pressure gage. The oxygen system is designed to supply passengers and crew with 100% oxygen for approximately 47 minutes at an altitude of 20,000 feet.

General Maintenance Procedures. If maintenance on the aircraft oxygen system or any other system in the aircraft that requires removal of an oxygen system component, strict adherence to the following procedures and precautions is required.

WARNING

DO NOT permit smoking or open flame in or near aircraft while maintenance is being performed on the oxygen system. Assure all electrical power is disconnected from aircraft and that aircraft is properly grounded. In addition, oils, grease, and solvents may burn or explode spontaneously when contacted by oxygen under pressure.

a. Use extreme caution to assure every part of the system is kept thoroughly clean and free from water, oil, grease, and solvent contamination.
b. Cap all openings immediately upon removal of any component. Do not use tape or caps which will introduce moisture.
c. Observe extreme caution to avoid bending tubing or damaging the flares on tubing that is not being removed.
d. If an opening becomes uncapped or unplugged, the affected component must be removed and cleaned as follows:
1. Vapor degrease with MIL-T-7003 trichloroethylene, then dry with dry nitrogen (MIL-N-6011, Grade A, Type I).
e. All tools used for installation of oxygen tubes or fittings must be free from dirt, grease, or oils.
f. Maintenance personnel must assure that their hands are free of dirt or grease prior to installation of oxygen tubing or fittings.
g. When connecting straight threaded fittings, align tubing and press flare end firmly against fitting end. Tighten nut 1/2 to 1 turn and apply MIL-T-5542 thread compound sparingly to the remaining exposed threads.
h. When connecting tapered threaded fittings, place polytetrafluorethylene anti-seize tape (MIL-T-27730) so that a minimum of 1 1/2 threads remain uncovered at the starting end of the fitting. Stretch tape during wrapping of fitting and apply 1 1/2 turns of tape to fitting.

OXYGEN CYLINDER ASSEMBLY. (See figure 4-20.) The oxygen cylinder assembly stores 38 cubic feet of oxygen under a pressure of 1800 (±50) psi. A shutoff valve is installed to complete the cylinder assembly.

OXYGEN CYLINDER SHUTOFF VALVE. (See figure 4-20.) The shutoff valve is a twist-type slow opening unit which incorporates a burst disc relief valve to protect against oxygen cylinder overpressure. The relief valve is plumbed to a three-way block and then overboard through a discharge port. The burst disc is designed to relieve at 3350 psi. The entire oxygen system supply will be dumped when the burst disc is ruptured. Access to the shutoff valve is gained by removal of the RH nose compartment access door.

OXYGEN SYSTEM - SERVICING. Refer to Section I for servicing instructions.

OXYGEN SYSTEM REGULATOR. (See figure 4-20.) The diaphragm-type regulator, connected to the outlet port of the shutoff valve, incorporates a high and low pressure relief valve. The high and low pressure relief valves are spring-loaded reset type and are set at 275 and 70 psi respectively. Both valves are plumbed to a three-way block and then overboard through a common discharge port. Access to the oxygen system regulator is gained by removal of the RH nose compartment access door.

CREW MASKS. Two diluter-demand type masks are installed in the cockpit for the crew members' use. The masks are connected to the distribution system by quick-disconnects.

PASSENGER MASKS. Seven passenger dropout masks are installed in three overhead drop-down storage compartments. The masks are connected to the distribution system by seven lanyard-operated shutoff valves.

SOLENOID SHUTOFF VALVE. The solenoid valve, located on the LH cockpit wall, automatically allows oxygen flow to the passenger distribution system. The solenoid valve is controlled by an aneroid switch.

ANEROID SWITCH. The aneroid switch, located behind the instrument panel near the LH side of the fuselage, is installed in the pressurized portion of the cabin. The switch senses cabin pressure and applies an open signal to the solenoid valve when cabin pressure is equivalent to an altitude of 14,000 feet or more.

MANUAL SHUTOFF VALVES. Two manual shutoff valves are installed on the LH cockpit wall. The forward valve (passenger shutoff), normally in the open position, is installed to completely isolate the cabin portion of the oxygen system, if desired. The aft valve (aneroid bypass), normally in the closed position, is installed in a bypass line around the solenoid valve. In case of solenoid valve or aneroid switch malfunction, the bypass valve must be opened.

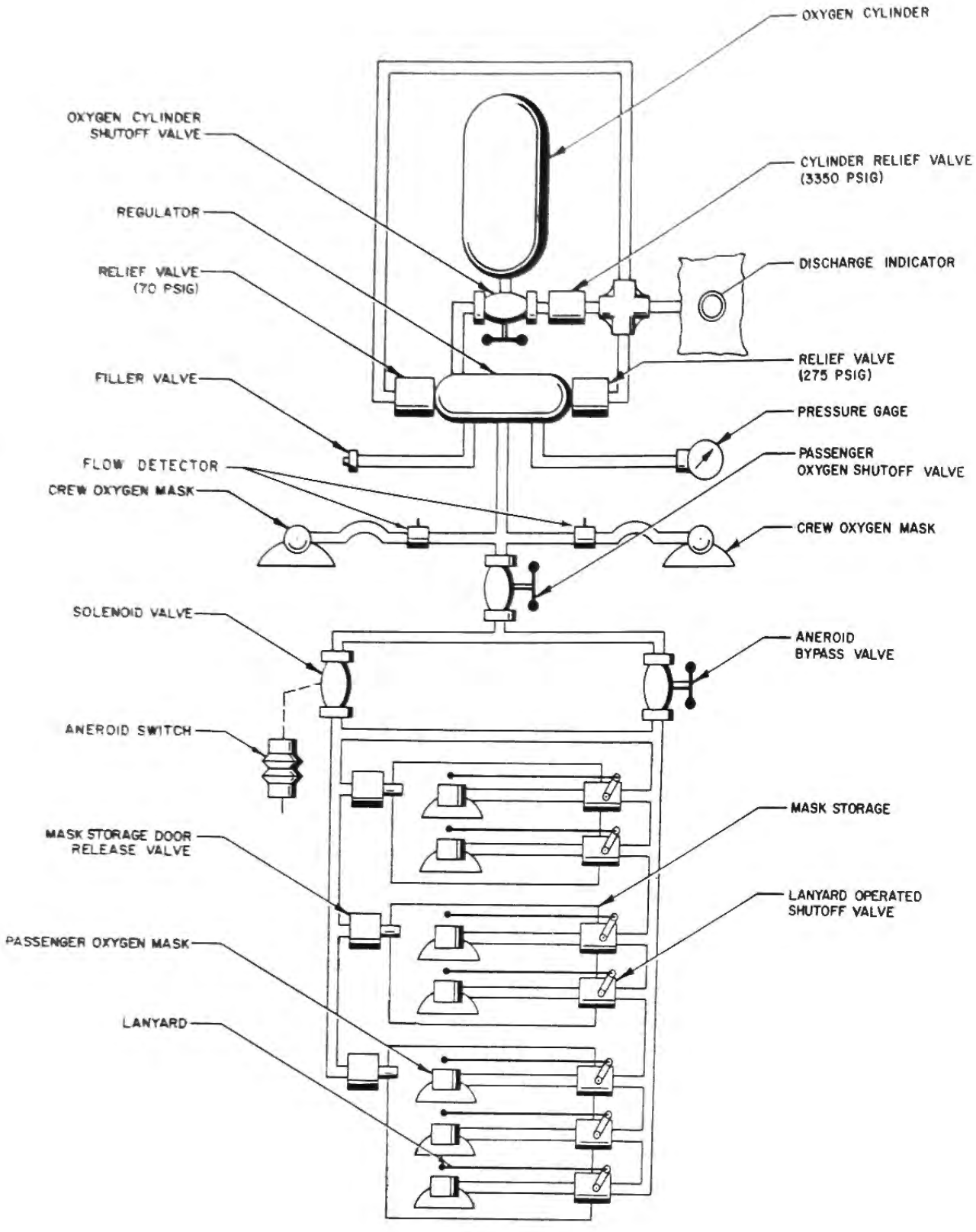

Figure 4-19. Oxygen System Schematic

DOOR ACTUATOR VALVES. Under normal conditions, the three door release valves maintain the passenger mask storage compartment doors in the up-and-locked positions. The valves are connected to the passenger distribution system by a common 1/4-inch line. When oxygen pressure is supplied to the passenger distribution system, the valve plungers extend, allowing the doors to swing open.

Note

The door release valves do not incorporate bleed orifices. Should a condition arise where the doors opened and no passenger oxygen was utilized, one of the lanyards should be pulled to bleed oxygen pressure from the distribution system. The valve plungers will retract and the doors may be stowed in the up-and-locked position.

REMOVAL AND INSTALLATION OF OXYGEN SYSTEM COMPONENTS. Removal and installation of oxygen system components, except hose assembly, should be performed as shown in the exploded view sequence of figure 4-20.

a. Crew Oxygen Mask Hose Assembly Replacement. (See figure 4-20A.)

WARNING

Standard maintenance practices for aviation oxygen system should be utilized. Precautions against oil, grease, and organic matter should be observed.

Note

The following instructions are applicable for both the pilot and copilot oxygen mask hose assembly.

1. Disconnect existing oxygen mask hose from receptacle. Disconnect microphone cord and remove oxygen mask and hose assembly.
2. Remove oxygen mask from oxygen regulator as shown in detail A.
3. Insert two number 60 (.040) diameter pins of the same length through the two outer holes in oxygen regulator and slot of regulator valve assembly as shown in detail B.

Note

If valve assembly slot is not aligned with holes, disconnect hose assembly from regulator and carefully remove valve assembly from regulator. Align valve assembly slot with holes and reinstall valve assembly.

4. Loosen fitting until hose assembly is removed from regulator. Discard hose assembly.
5. Holding the pins securely in one hand to prevent rotation of valve assembly, carefully screw in the new oxygen flow detector and hose assembly fitting into regulator until finger tight. Remove pins.
6. Torque hose assembly fitting to 30 inch pounds.

Note

Visually inspect valve slot has not rotated and plugged holes.

7. Reinstall oxygen mask on regulator.
8. Plug oxygen hose assembly into aircraft oxygen receptacle.

Note

The oxygen flow detector pin shall be fully extended when oxygen flow detector and hose assembly is pressurized by normal oxygen pressure.

9. Position oxygen regulator selector to 100%.
10. Don oxygen mask and breathe deeply. There should be no noticeable restriction on breathing.

OXYGEN SYSTEM LEAKAGE TEST.

WARNING

Standard maintenance practices utilized for any aviation oxygen system should be followed. Precautions against oil, grease, and other organic matter should be observed.

a. Fill the oxygen cylinder in accordance with Section I. Allow pressure to stabilize for 1 hour then read and record the cylinder pressure and the ambient temperature. After 24 hours, record the cylinder pressure and the ambient temperature. Maximum allowable pressure drop for a 24-hour period is 50 psig after correcting for temperature change, using the formula of ±1° = ±3.4 psig.

EXAMPLE:

One hour after filling:
1. Ambient temperature 70° F
2. Cylinder pressure 1925 psig.

Twenty-four hours after readings above:
1. Ambient temperature 60° F
2. Temperature change is 10° F (70° - 60°)
3. Temperature correction factor (-1° F = 3.4 psig) or -10° F = -34 psig.
4. Original pressure reading less temperature correction factor (1925 - 34) = 1891 psig. Subtract the allowable pressure drop of 50 psig from 1891.
5. Cylinder pressure reading should be no less than 1841 psig.

If the pressure drop as derived from the readings above exceeds 50 psig, perform the following leak test:

a. Charge cylinder to approximately 1800 psig and open the cylinder manual shutoff valve.

b. Check all fittings, connections, and the pilot's and copilot's mask outlets using Sherlock Type CG Leak Detector, manufactured by Zep Aero Corporation, El Segundo, California.

c. If leaks are found, close the cylinder manual shutoff valve, bleed the oxygen from the system, and make the necessary repairs.

d. Retest the system.

FUNCTIONAL CHECK OF OXYGEN SYSTEM. In accordance with current inspection requirement, Section VIII, the oxygen system should be functionally checked as follows:

WARNING

Standard maintenance practices utilized for any aviation oxygen system should be followed. Precautions against oil, grease, and other organic matter should be observed.

a. Check oxygen cylinder pressure for approximately 1800 psig. Recharge if necessary.
b. Check to assure the cylinder manual shutoff valve is open and the manual passenger shutoff valve is closed.
c. Using either the pilot's or copilot's oxygen mask, insert the bayonet end of hose in the pilot's oxygen valve, don mask, and check for presence of oxygen. Check the copilot's oxygen system in the same manner.
d. Open the manual passenger shutoff valve.
e. Connect a vacuum source and altimeter (or vacuum gage) to the open port of the oxygen aneroid switch as shown in figure 4-19A. The aneroid switch is located under the instrument panel on the LH side of the cabin near frame 5.
f. Set the battery switch to ON.
g. Slowly pull a vacuum until an altimeter reading of 14,000 feet (17.57 inches Hg) is obtained. Between 13,250 feet (18.11 inches Hg) and 14,750 feet (17.05 inches Hg), the aneroid switch should actuate and the passenger masks should drop out.
h. Pull the lanyard of each individual mask and check for oxygen flow.
i. Set battery switch to OFF.
j. Close the cylinder manual shutoff valve and bleed system of oxygen.
k. Disconnect altimeter (or vacuum gage) and vacuum source from the aneroid switch.
l. Stow the crew and passenger masks and close the manual passenger shutoff valve. Assure that passenger masks are stowed spirally to avoid kinking of lines.
m. Recharge the oxygen cylinder in accordance with Section I.

BURST DISC RELIEF VALVE REPLACEMENT. (See figure 4-20.)
a. Remove old burst disc relief valve as follows:

WARNING

DO NOT permit smoking or open flame in or near aircraft while maintenance is being performed on the oxygen system. Assure all electrical power is disconnected from aircraft and that aircraft is properly grounded. In addition, oils, grease, and solvents may burn or explode spontaneously when contacted by oxygen under pressure.

1. Remove tailcone access door and disconnect aircraft batteries. Assure that aircraft is properly grounded.
2. Gain access to oxygen cylinder installation and close cylinder shutoff valve.
3. Don pilot's or copilot's oxygen mask and breathe until all pressure in distribution line is depleted.
4. Disconnect oxygen distribution system tube from regulator.

CAUTION

DO NOT bleed oxygen pressure to atmosphere too rapidly as an overheating condition could result.

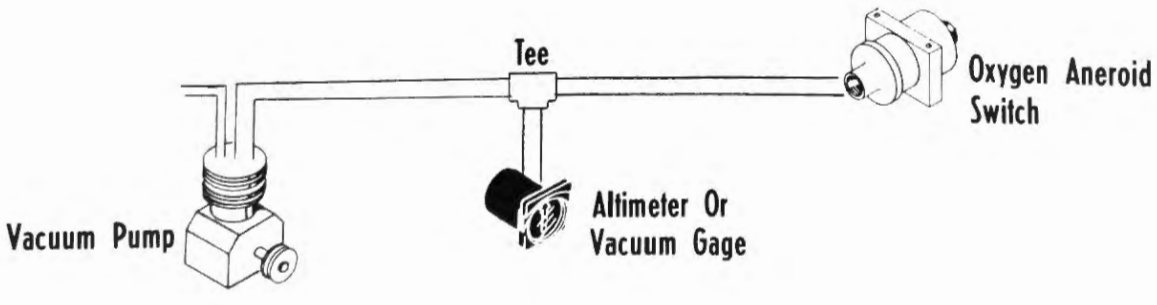

Figure 4-19A. Functional Check of Passenger Oxygen System

5. Slowly open shutoff valve and allow oxygen pressure to bleed to atmosphere. After oxygen pressure is depleted, close shutoff valve.
6. Loosen and disconnect tubing from three-way block fittings (three places). Cap all exposed openings.
7. Loosen and remove burst disc relief valve with three-way block attached from aircraft.
8. Remove burst disc relief valve from three-way block.

b. Install new burst disc relief valve as follows:
1. Assemble disc and retainer ring into burst disc cap as shown.
2. Install burst disc relief valve assembly on cylinder shutoff valve and tighten finger-tight plus 1/4 turn.
3. Install three-way block and tighten 1/2 to 1 turn. Apply MIL-T-5542 thread compound sparingly to remaining exposed threads.
4. With burst disc relief valve held firmly in place, torque three-way block until three-way block is clocked to correct position to allow tubing connection. Do not exceed maximum torque of 200 inch-pounds.
5. Connect tubing to three-way block fittings and tighten 1/2 to 1 turn. Apply MIL-T-5542 thread compound sparingly to remaining threads and tighten connections.
6. Service oxygen system. (Refer to SERVICING OXYGEN SYSTEM, Section I.)
7. Leak check all connections using Sherlock Type CG Leak Detector, manufactured by Zep Aero Corporation, El Segundo, California.
8. Connect aircraft batteries and install tailcone access door.

WING LEADING EDGE ANTI-ICE SYSTEM[A]. (See figure 4-21.) On aircraft equipped with wing leading edge anti-ice, anti-icing is accomplished by directing engine bleed air through the wing leading edge. The system consists of two thermoswitches, two indicator lights, a pressure regulator valve, system switch, and circuit breaker.

a. Operation.

Note

Under normal no-ice conditions, the pressure regulator valve is electrically energized to the closed position. When anti-icing is required, the pressure regulator valve is deenergized (opened); therefore, with a complete aircraft electrical failure, wing anti-icing is still available.

With the wing anti-ice switch set to ON, the pressure regulator is deenergized (opened). The pressure regulator, sensing downstream pressure through a sense line, regulates bleed air to approximately 10 to 20 psi. In addition, both wing heat and wing o'heat thermoswitches are set to close at approximately 215° F. The wing heat thermoswitch, sensing duct air temperature, closes and completes the circuit to the WING HEAT indicator light. The wing o'heat thermoswitch, sensing wing leading edge air temperature, closes and completes the circuit to the WING O'HEAT indicator light.

[A] Aircraft 23-010, 23-042, 23-044, 23-050A, 23-092 and 23-093 except when equipped with a Whittaker Regulator Valve.

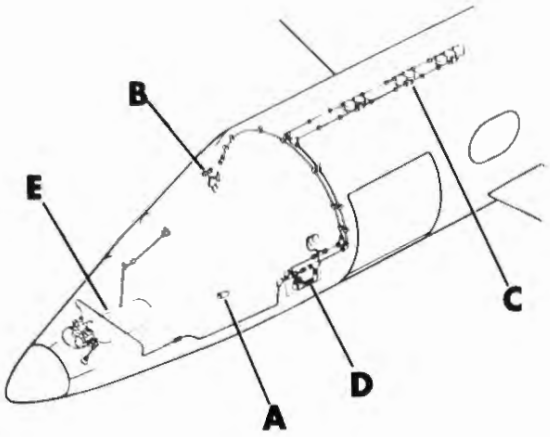

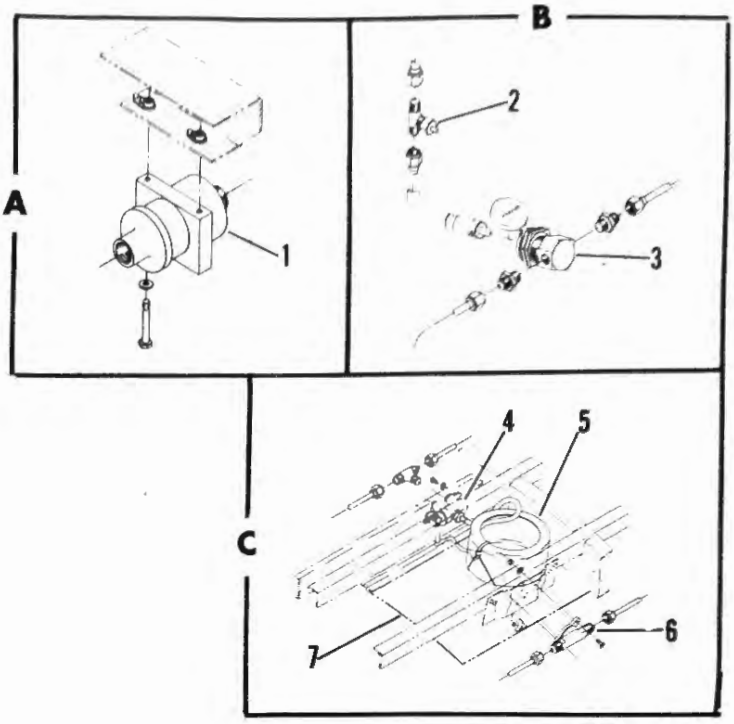

1. Aneroid
2. Flow Detector
3. Quick-Disconnect
4. Lanyard-Operated Shutoff Valve (Typ)
5. Passenger Mask (Typ)
6. Door Actuator (Typ)
7. Compartment Door (Typ)
8. Shutoff Valve (Manual)
9. Shutoff Valve (Manual)
10. Solenoid Valve
11. Bypass Line
12. Solenoid Valve
13. Shutoff Valve (Manual)
14. Shutoff Valve (Manual)
15. Oxygen Storage Cylinder
16. Three-Way Block
17. Discharge Indicator
18. Shutoff Valve (Manual)
19. Regulator
20. Line (To Oxygen Pressure Gage)
21. Filler Cap
22. Tube (Oxygen Distribution System)
23. Burst Disc Relief Valve Assembly
24. Disc
25. Retainer Ring
26. Burst Disc Cap

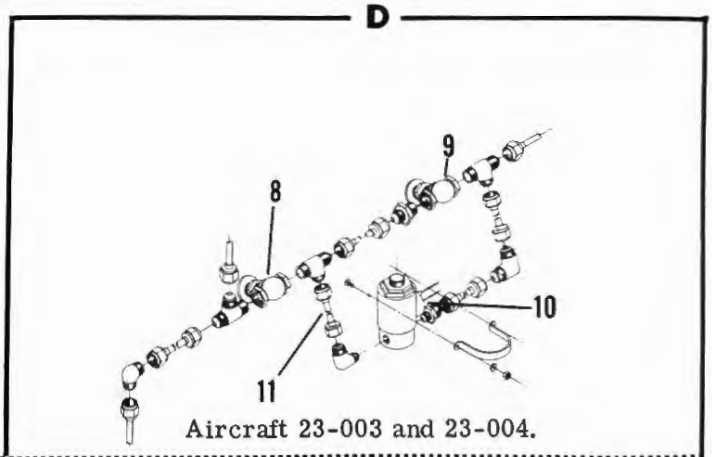

Aircraft 23-003 and 23-004.

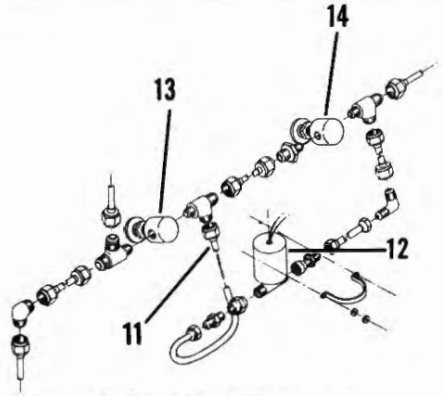

Aircraft 23-035 thru 23-099.

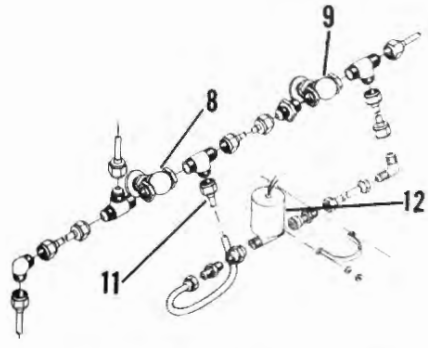

Aircraft 23-005 thru 23-034.

Figure 4-20. Oxygen System Installation (Sheet 1 of 2)

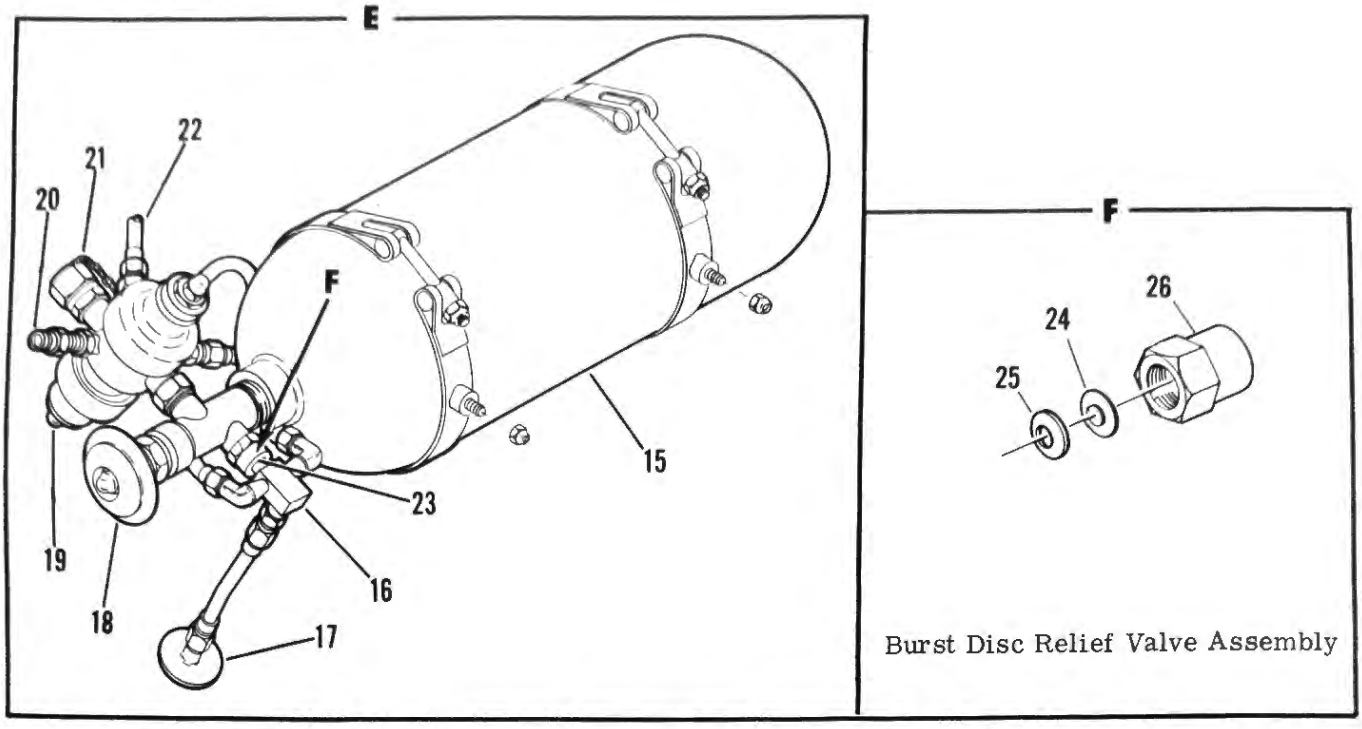

Aircraft 23-003 thru 23-099 Not Incorporating SK23/24/25-330

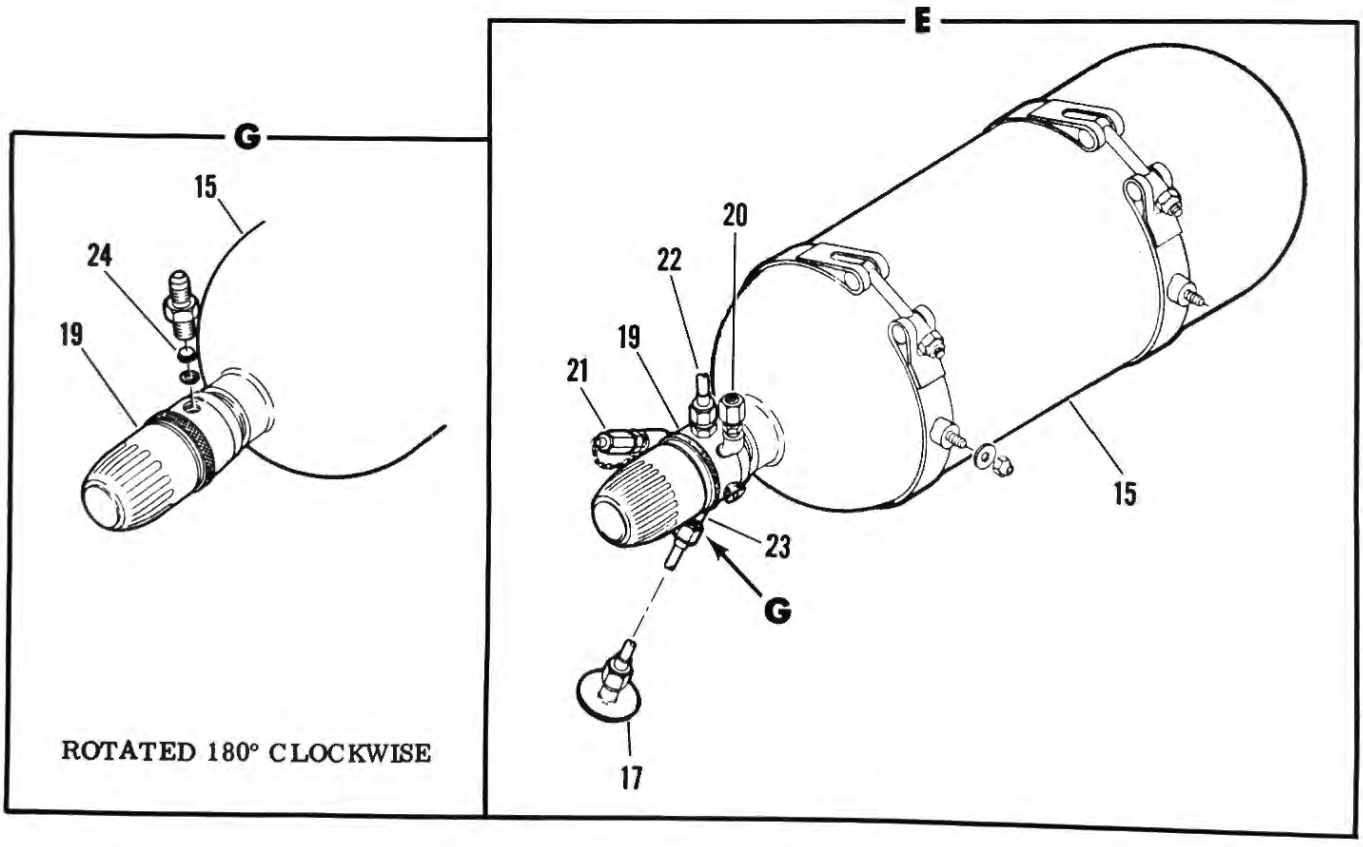

Aircraft 23-003 thru 23-099 Incorporating SK23/24/25-330

Figure 4-20. Oxygen System Installation (Sheet 2 of 2)

1. Oxygen Regulator
2. Crew Oxygen Mask
3. Microphone Cord
4. Hose Assembly
5. Flow Detector
6. Oxygen Receptacle
7. Detector Pin
8. Valve Assembly
9. Holes
10. Seal
11. Slot

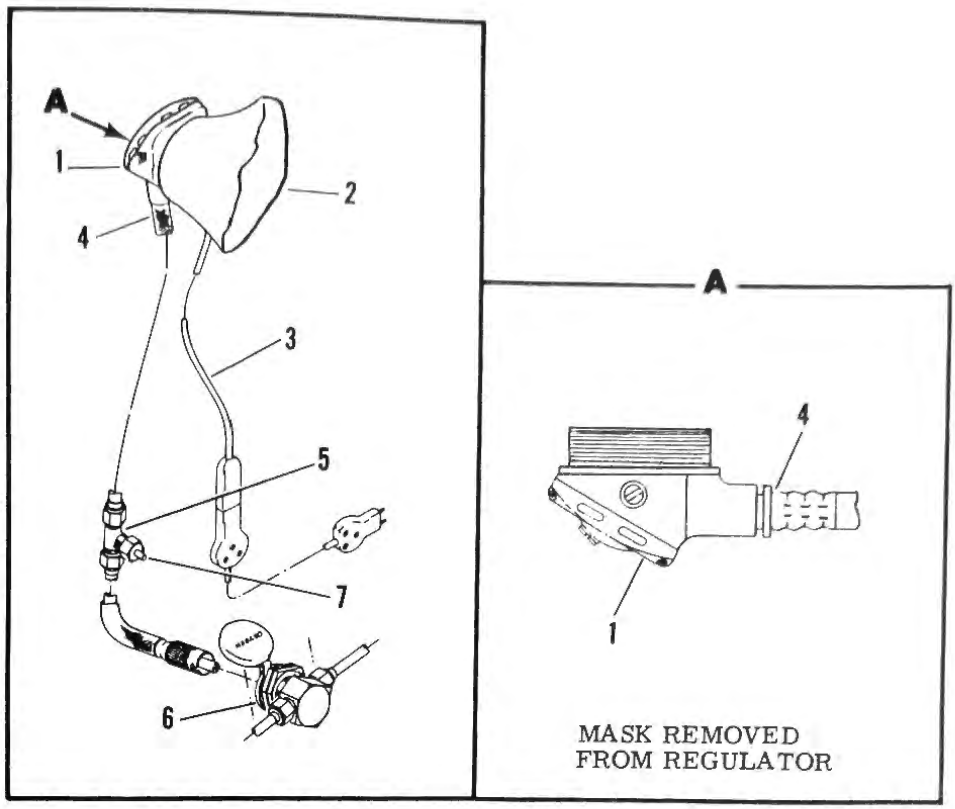

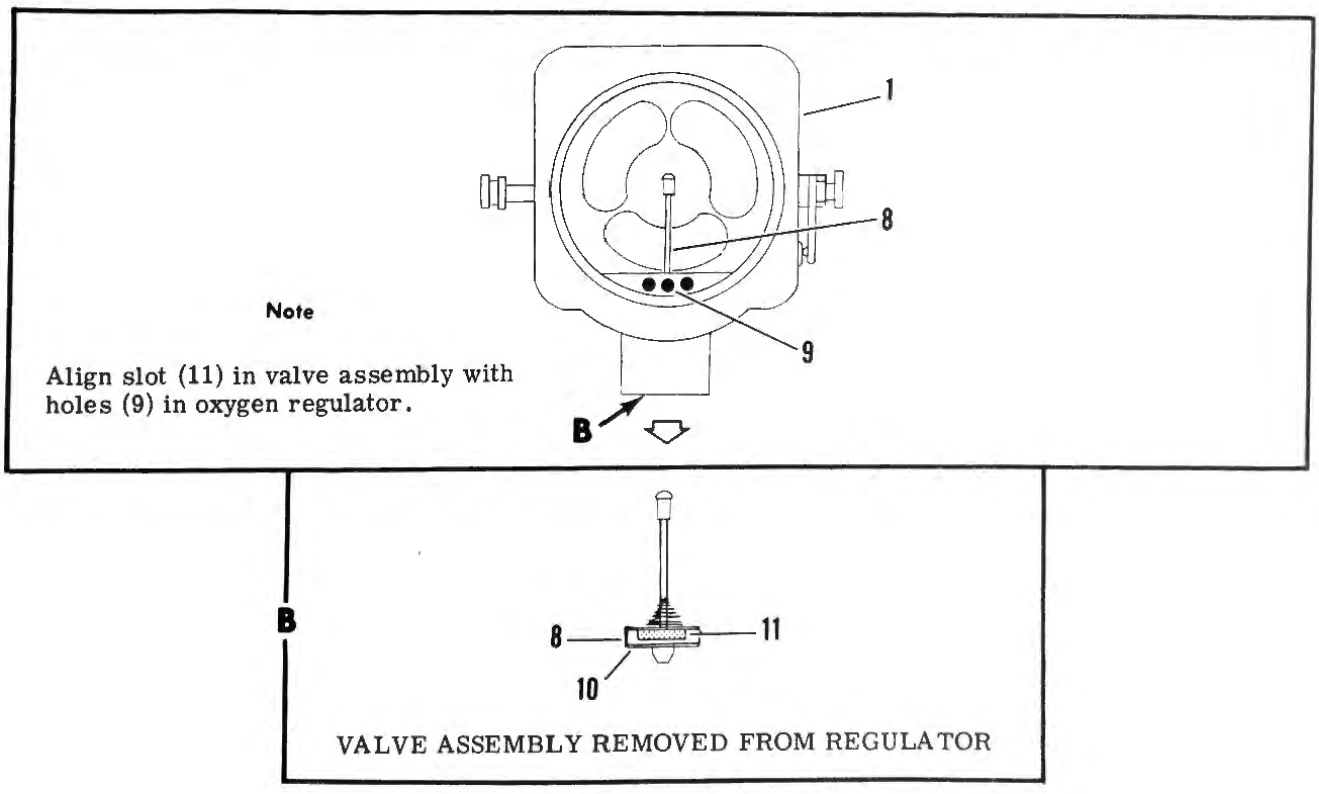

Figure 4-20A. Crew Oxygen Mask Hose Assembly Replacement

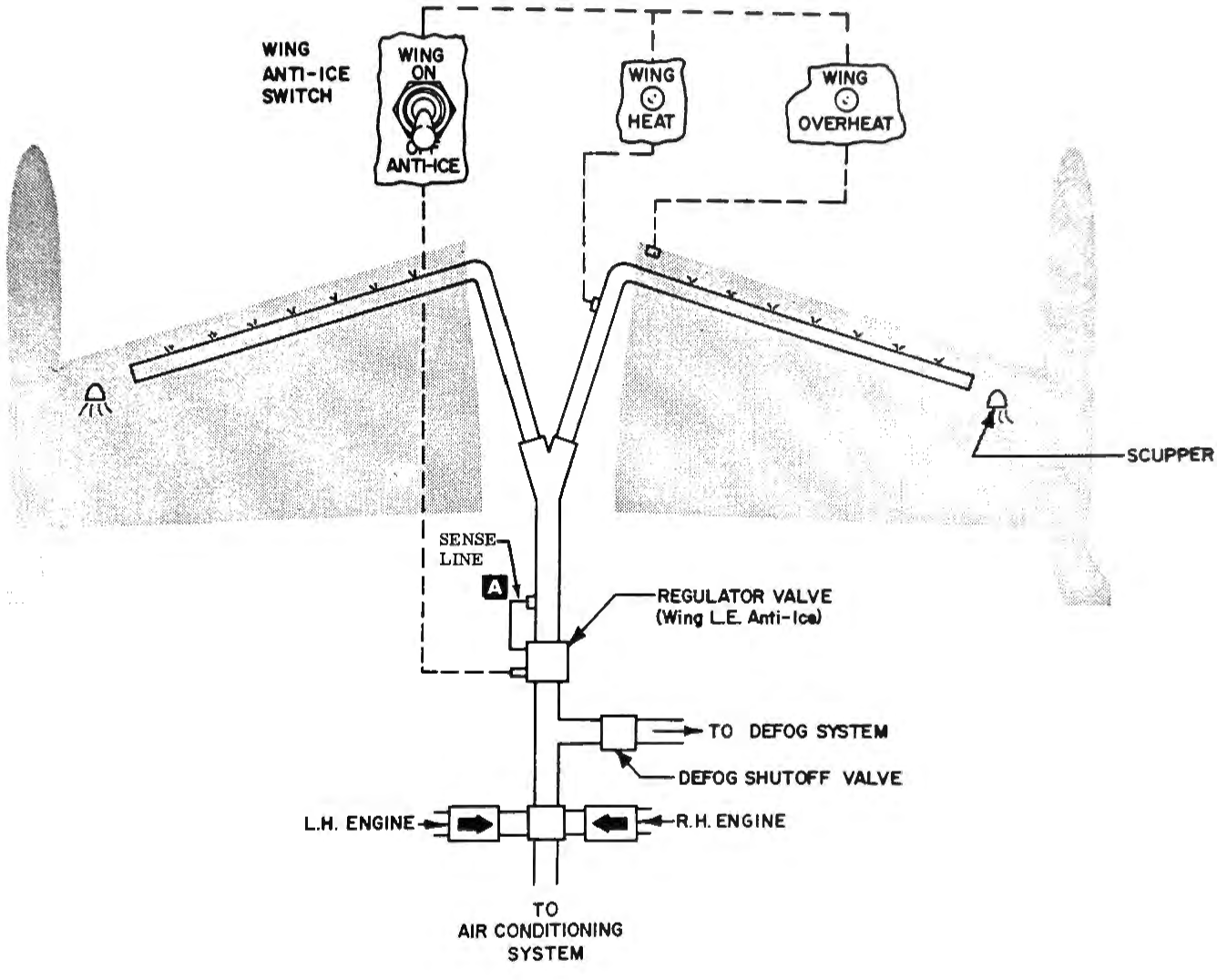

A AIRCRAFT 23-010, 23-042, 23-044, 23-050A, 23-092 AND 23-093 EXCEPT WHEN EQUIPPED WITH A WHITTAKER REGULATOR VALVE.

Figure 4-21. Wing Leading Edge Anti-Icing System Schematic

WING LEADING EDGE ANTI-ICE SYSTEM [B]. (See figure 4-21.) On aircraft equipped with wing leading edge anti-ice, anti-icing is accomplished by directing engine bleed air through the wing leading edge. The system consists of two thermoswitches, two indicator lights, a pressure regulator valve, system switch, and circuit breaker.

a. Operation. With the wing anti-ice switch set to ON, the pressure regulator valve is energized (opened). The regulator controls downstream bleed air pressure to approximately 8 to 20 psi. In addition, both wing heat and wing o'heat thermoswitches are set to close at approximately 215. F. The wing heat thermoswitch, sensing duct air temperature, closes and completes the circuit to the WING HEAT Indicator light. The wing o'heat thermoswitch, sensing wing leading edge air temperature, closes and completes the circuit to the WING O'HEAT indicator light.

[B] Aircraft 23-003 thru 23-009, 23-013, 23-014, 23-016 thru 23-018, 23-020 thru 23-030, 23-032 thru 23-041, 23-045 thru 23-049, 23-052 thru 23-054, 23-056 thru 23-059, 23-061 thru 23-064, 23-065A, 23-066 thru 23-086, 23-088 thru 23-091, 23-094, 23-095, 23-097 thru 23-099 and aircraft equipped with a Whittaker Regulator Valve.

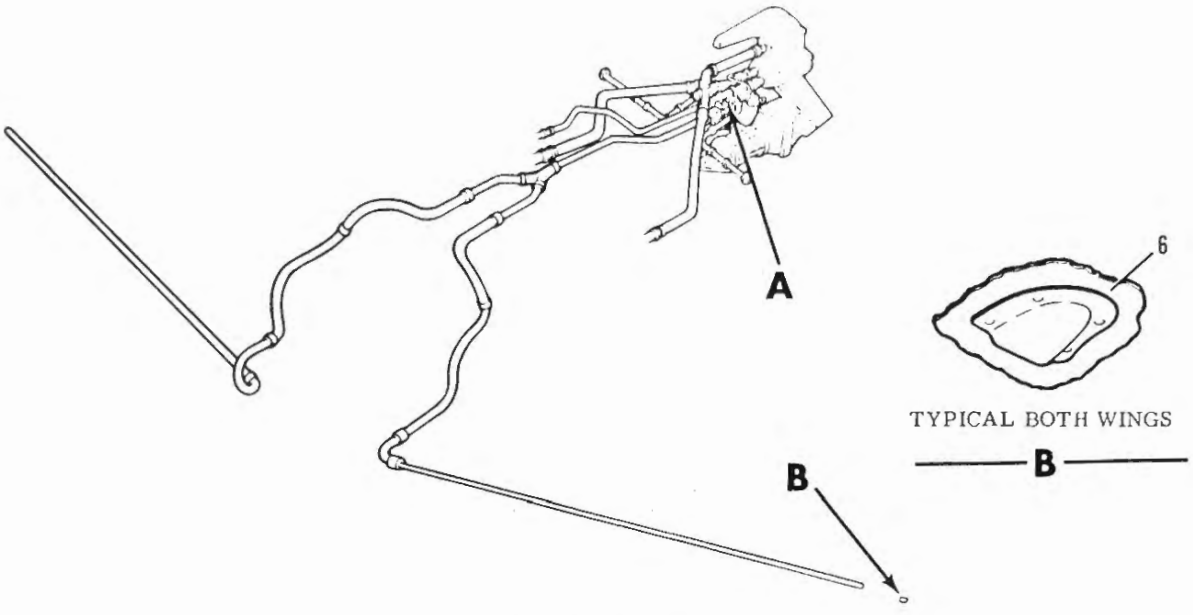

1. MANIFOLD
2. DEFOG SHUTOFF VALVE
3. WING ANTI-ICE REGULATOR VALVE
4. SENSE LINE
5. VENTURI
6. LH SCUPPER
7. DUCT

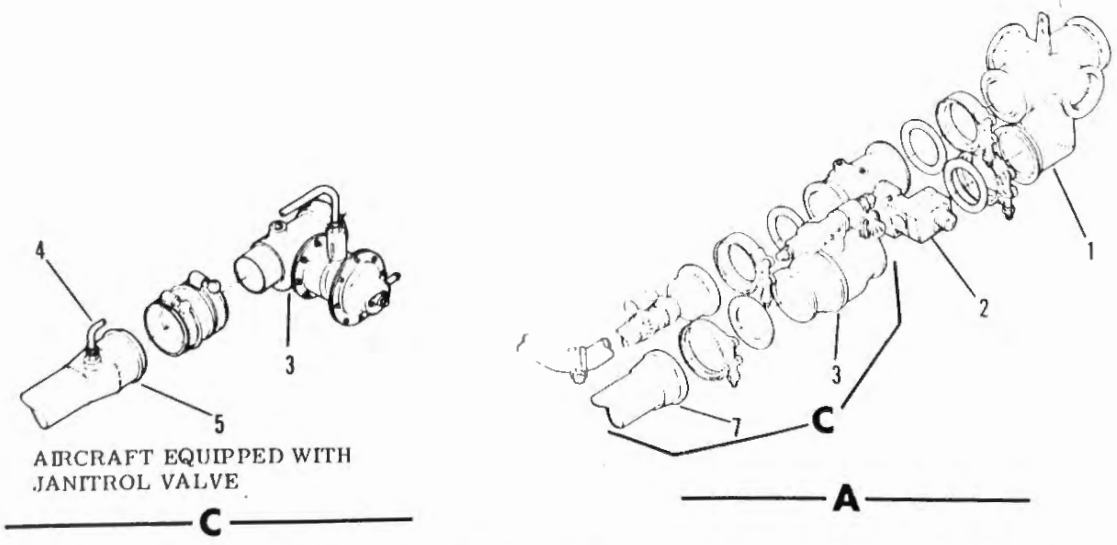

Figure 4-22. Wing Leading Edge Anti-Icing System Components Installation

SECTION V

ENGINES, FUEL, AND OIL SYSTEMS

TABLE OF CONTENTS

Title	Page
Engines	5-1
Engine Maintenance	5-1
Engine Removal	5-2A
Engine Mount Inspection	5-2A
Engine Installation	5-2B
Engine Assembly	5-5
Engine Ground Operation	5-5
Engine Emergency Procedures (Ground Operation Only)	5-6
Engine Power Controls	5-11
Engine Nacelles	5-12G
Engine Fire Detection System	5-12G
Engine Ice Detection System	5-14
Engine Anti-Icing System	5-16
Nacelle Anti-Icing System	5-16
Engine Lubrication System	5-16B
Fuel System	5-17
Wing Fuel Tanks	5-17
Tip Tanks	5-17
Fuselage Fuel Tank	5-21
Fuel Boost Pumps	5-23
Motorized Fuel Shutoff Valves	5-23
Fuel Filters	5-30
Fuel Temperature Warning System	5-30
Ram Air Fuel Vent System	5-30
Resistance-Type Fuel Quantity Indicating System	5-34A
Fuel Quantity Indicator	5-34A
Fuel Probe Sensors	5-38
Fuel Quantity Calibration Procedure	5-41
Capacitance-Type Fuel Quantity Indicating System	5-41
Fuel Quantity Indicator	5-41
Fuel Quantity Selector Switch	5-41
Tank Units	5-41
Integral Fuel Tank Sealing	5-42

ENGINES. The Lear Jet is powered by two General Electric [A] CJ610-1 ([B] CJ610-4) single-rotor axial-flow turbojet engines. The engines are installed in pylon-mounted nacelles, one located on each side of the aft fuselage. Each engine is rated at approximately 2850 pounds of thrust at sea level. The engine assembly consists of an eight-stage axial-flow compressor, driven by a two-stage turbine, an annular combustion section, a fixed-area concentric exhaust cone, and an integrated control system. Each engine is attached to two engine beams at three attachment points. Individual thrust levers, located on the cockpit center pedestal, govern engine power by regulating each engine fuel control unit. Each engine exhaust system incorporates a stainless steel shroud to provide increased cooling throughout the nacelle in all flight conditions and ground operation. Eight chromel-alumel thermocouples, at two different immersion depths in the exhaust stream, generate an average value of exhaust gas temperature, which is indicated on the EGT indicators in the cockpit. An engine-driven starter generator is installed on each engine to provide engine starting and furnish 30-volt 400-amp DC power to the aircraft electrical system. Compressor discharge air, bled through a main frame port on each engine, is utilized for cabin air-conditioning and pressurization, windshield defogging, and engine inlet anti-icing.

ENGINE MAINTENANCE. Basic engine maintenance, and instructions relative to trouble shooting, removal, installation, and adjustment of basic engine components are not included in this service manual. For detail engine component maintenance instructions,

[A] Aircraft 23-003 thru 23-029.

[B] Aircraft 23-030 thru 23-099.

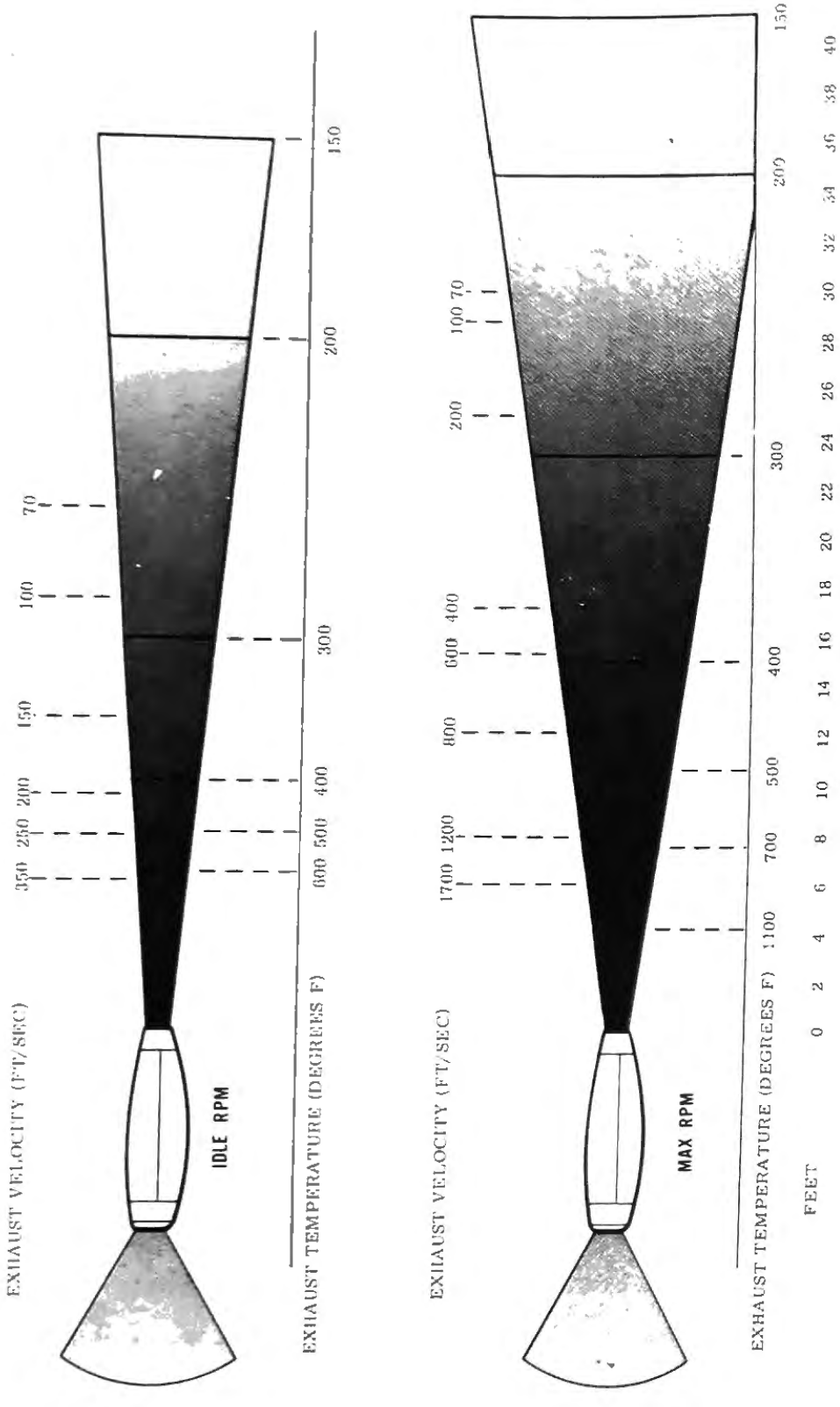

Figure 5-1. Engine Danger Areas

refer to the following applicable General Electric Publications:

Title	Publication No.
CJ610-1 Turbojet Maintenance Manual (Includes CJ610-4)	SEI-136
CJ610-1 Turbojet Illustrated Parts Catalog (Includes CJ610-4)	SEI-137

ENGINE REMOVAL. (See figure 5-3.)

Note

This procedure is applicable to either engine, except as noted.

a. Disconnect fire sensing elements from engine cowling.
b. Remove engine cowling.
c. Disconnect throttle linkage from fuel control unit bellcrank.
d. Remove bolts attaching throttle linkage bracket to fuel-oil cooler.
e. Remove clamps attaching throttle linkage to engine.
f. Disconnect and cap the following at pylon firewall:
1. Hydraulic supply and return hoses
2. Compressed gas hose (PT5)
3. Main fuel hose

CAUTION

Engine bleed air ducting damage could result from excessive bending. Disconnect engine bleed air ducting at both ends and remove from aircraft.

4. Bleed air ducting
g. Disconnect bonding cables from aft engine mount bracket.
h. Disconnect cooling duct from starter generator.
i. Disconnect oil line from oil pressure transmitter.
j. Disconnect and free electrical wiring connected to the following units:
1. Fuel flowmeter
2. Oil pressure transmitter
3. Starter-generator
*4. Ice detector
5. Ignition generator
6. Anti-ice relay
*7. Ice interpreter
8. Anti-ice pressure switch
9. Oil temperature bulb
10. Tachometer-generator
11. Anti-ice valve
12. EGT thermocouple harness

*Applicable to left engine only.

k. Attach engine sling and hoist to engine.
l. Remove engine mounting bolts and lower engine to an engine stand.

ENGINE MOUNT INSPECTION. At each engine removal or change, the engine mounts are to be inspected as follows:

Note

Disassembly of the top engine mount is required for checking permanent set of rubber parts. The forward inboard engine mount need not be removed from the front ring support for measuring permanent set. The aft inboard engine mount need not be removed from the yoke assembly for measuring permanent set.

a. Remove top engine mount from engine and disassemble the two bonded sandwiches from the center spacer.
b. Wipe all oil and dirt from the bonded parts with a clean, dry cloth.
c. Wash unbonded metal parts in dry cleaning solvent. Do not clean rubber parts in solvent.
d. Inspect the unbonded center spacer of the top main mount for nicks, scratches, gouges or cracks and replace if any are evident.
e. Inspect both top main mount bonded rubber sandwiches as follows:
1. Inspect for metal to rubber bond separation and replace if separation has progressed 180° around circumference or has reached a depth of 0.10" or more.
2. Inspect for surface cracks on rubber caused by flexing and replace if they have reached a depth of 0.12" or more.
3. Inspect to see that rubber has returned to its original shape after load was removed. Replace sandwich if thickness is less than 0.65".
4. Magnaflux the end plates and inspect for nicks, scratches, gouges or cracks and replace if any are evident.
h. Inspect the forward inboard and aft inboard mounts as follows:
1. Inspect for metal to rubber bond separation and replace if separation has progressed 90° around circumference or has reached a depth of .06" or more.
2. Inspect for surface cracks on the rubber caused from flexing and replace if they have reached a depth of .06" or more.
3. Inspect to see that rubber has returned to its original shape after load was removed. Replace aft inboard mount if the radius is less than 0.67" at any given point. Replace forward inboard mount if the radius is less than 0.88" at any given point.

Note

Replacement of the aft inboard and forward inboard engine mounts will require pressing out of the old mount and pressing in the new.

ENGINE MOUNT REPLACEMENT. Engine removal is required for replacement. Refer to ENGINE REMOVAL.

a. Remove Top Engine Mount as follows:
   1. Cut and remove safety wire.
   2. Loosen jamnut, unscrew and remove eye bolt, nut, bolt and washers.
   3. Separate and remove top sandwich, bottom sandwich and center spacer.

b. Install Top Engine Mount as follows:
   1. Position bottom sandwich on engine mounting pad, insert center spacer and position top sandwich over center spacer.

Note

The top sandwich will be stamped "TOP".

   2. Install washers on bolt and insert bolt from bottom. Run nut onto bolt. Tighten nut to compress sandwiches to the dimension shown.
   3. Safety wire nut and bolt.
   4. Screw eyebolt into bolt and adjust to dimension shown. Tighten jamnut.

c. Remove Forward Inboard Engine Mount as follows:
   1. Remove attaching parts and front ring support from engine.
   2. Press engine mount from front ring support.
   3. Clean inside of engine mount cavity on front ring support.

d. Install Forward Inboard Engine Mount as follows:
   1. Apply zinc chromate primer and press fit engine mount into front ring support while primer is still wet. Engine mount should protrude equally from both sides of its boss.
   2. Install front ring support on engine and secure with attaching parts.

e. Remove Aft Inboard Engine Mount as follows:
   1. Remove attaching parts and yoke assembly from pylon.
   2. Press aft inboard engine mount out of the yoke assembly from the forward side of the yoke assembly.

Note

The aft inboard engine mount has a flange on the aft end and can only be pressed out of the yoke assembly from the forward side.

   3. Clean inside of engine mount cavity in the yoke assembly.

f. Install Aft Inboard Engine Mount as follows:
   1. Apply zinc chromate primer and, while primer is still wet, press engine mount into yoke assembly from the aft side.

Note

The aft inboard engine mount has a flange on one end. This flange must be on the aft side of the yoke assembly after installation.

   2. Install yoke assembly on pylon and secure with attaching parts.

ENGINE INSTALLATION. (See figure 5-3.)

Note

This procedure is applicable to either engine, except as noted.

a. Attach engine sling and hoist to engine and raise engine to align with engine mounts.

Note

If top main mount is being replaced adjust eyebolt as shown in Detail A, figure 5-3.

b. Install and torque engine mounting bolts. Torque upper engine mount bolt 95 to 110 inch-pounds. Torque forward inboard engine mount bolt 20 to 25

1. Pylon
2. Bolt
3. Fuel Connection
4. Front Support Fitting
5. Washer
6. Nut
7. Front Ring Support
8. Yoke Assembly
9. Mounting Bracket
10. Electrical Wiring
11. EPR (PT 5) Connection
12. Fire Sensing Element
13. Hydraulic Connection
14. Throttle Cable
15. Top Main Engine Mount
16. Bleed Air Connection
17. Nacelle Bulkhead
18. Oil Pressure Transmitter
19. Pressure Sensing Line
20. Forward Inboard Engine Mount
21. Aft Inboard Engine Mount

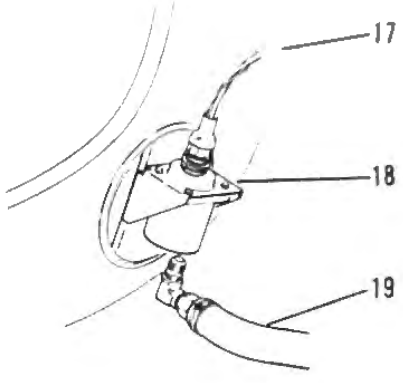

VIEW TYPICAL ON BOTH NOSE CAP ASSEMBLIES.

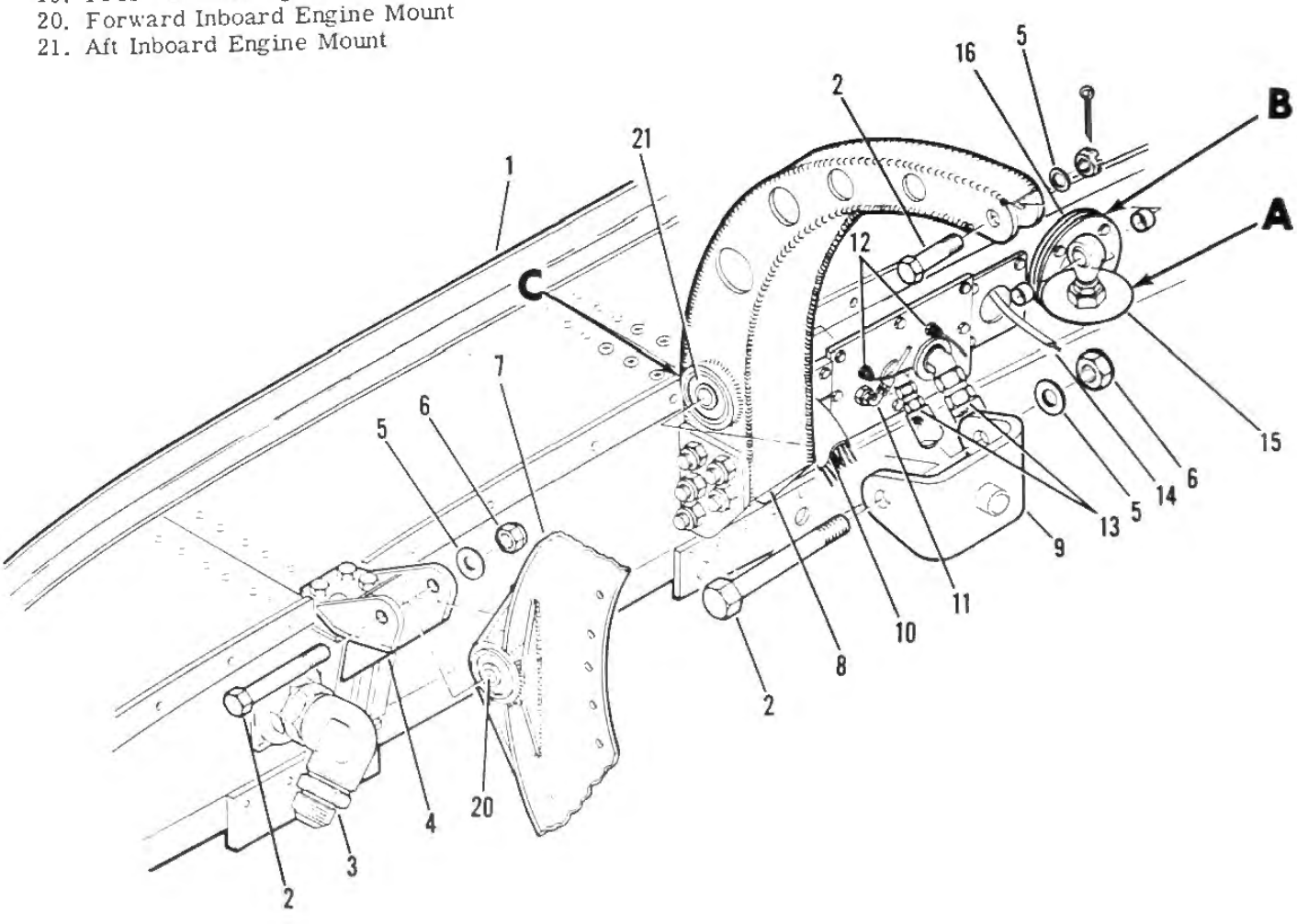

Figure 5-3. Engine Installation (Sheet 1 of 2)

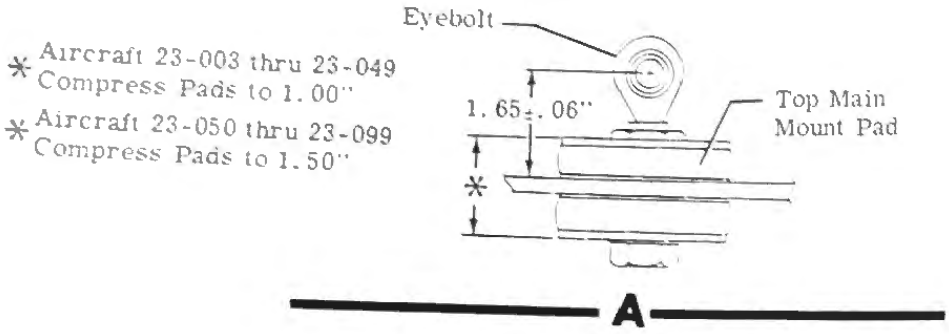

A

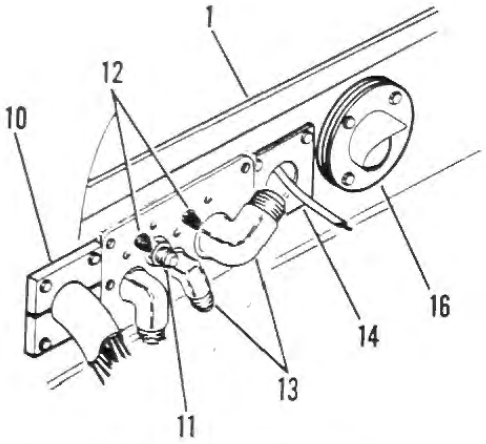

Aircraft 23-070 thru 23-099

B

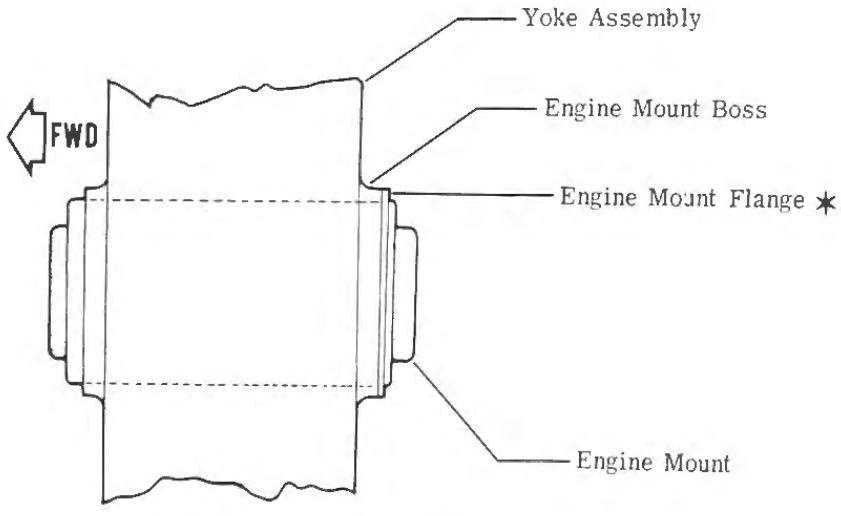

* Engine mount must be installed with flange on aft side of yoke

C

Figure 5-3. Engine Installation (Sheet 2 of 2)

Learjet Temporary Service Manual Revision

SERVICE MANUALS AFFECTED: Gates Learjet Models 23, 24, 24B, 24D/E/F, 25 and 25B/C/D/F including United Kingdom Model 25B/C/D/F Service Manuals.

FILING INSTRUCTIONS: Insert pages as listed below and retain until further notice.

Model 23	- Insert adjacent to page 5-4A.
Model 24	- Insert adjacent to page 5-3.
Model 24B	- Insert adjacent to page 5-6.
Model 24D/E/F	- Insert adjacent to page 5-6.
Model 25	- Insert adjacent to page 5-6.
Model 25B/C/D/F	- Insert adjacent to page 5-6.

REASON: To correct transposed dimensions.

INSTRUCTIONS: Revise the engine mount dimensions as follows:

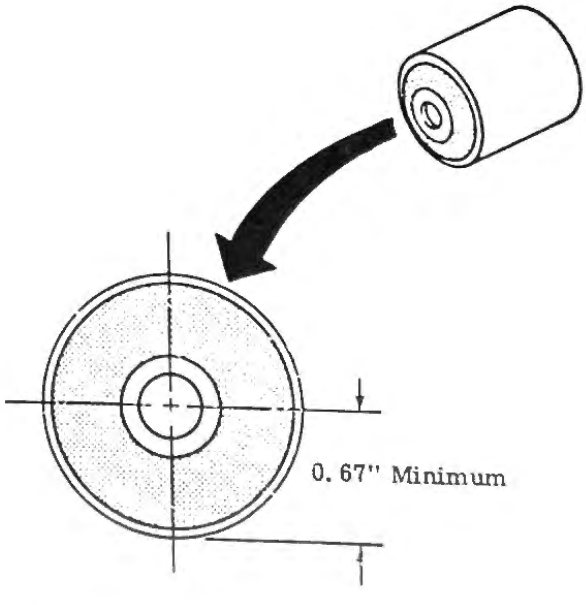

FORWARD INBOARD ENGINE MOUNT

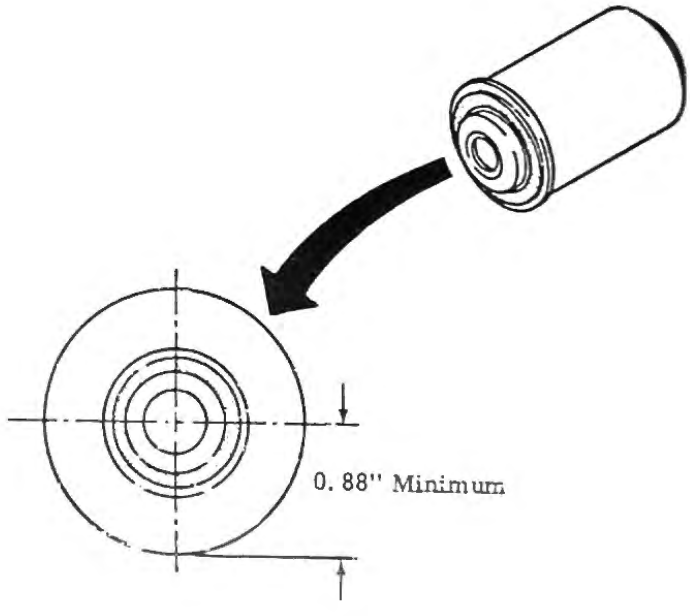

AFT INBOARD ENGINE MOUNT

November 30, 1976

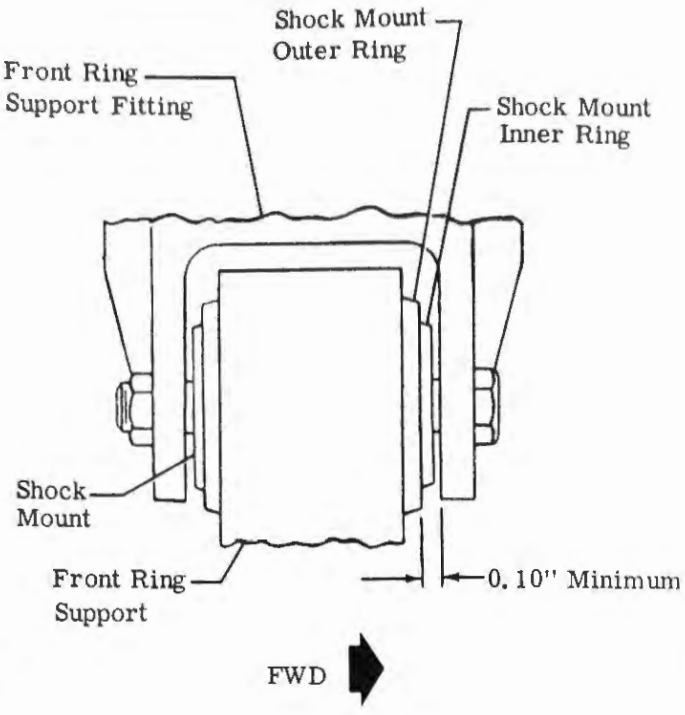

FORWARD INBOARD MOUNT INSTALLATION

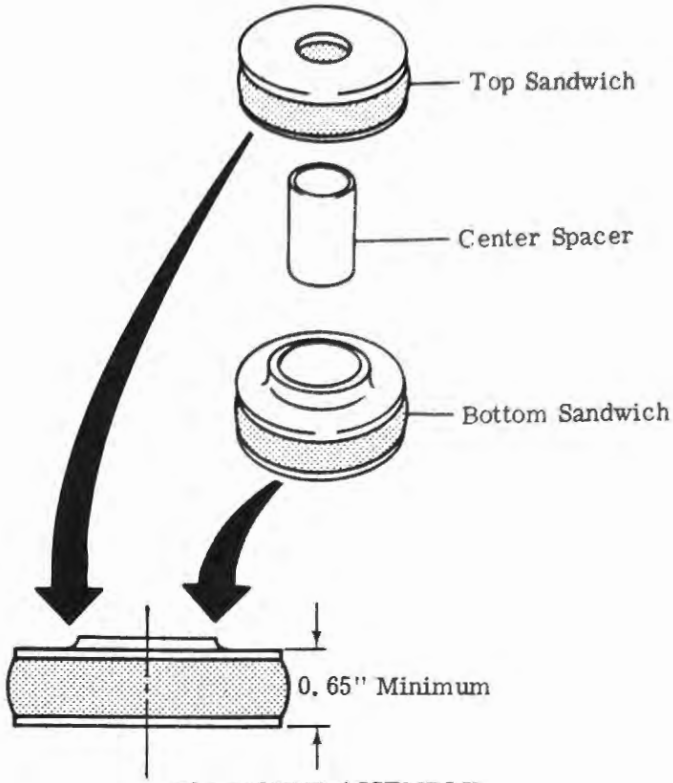

TOP MOUNT ASSEMBLY

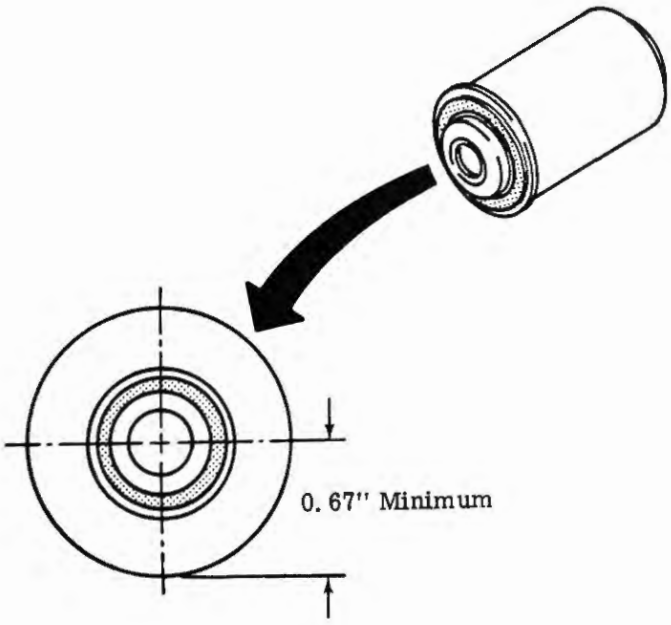

AFT INBOARD MOUNT

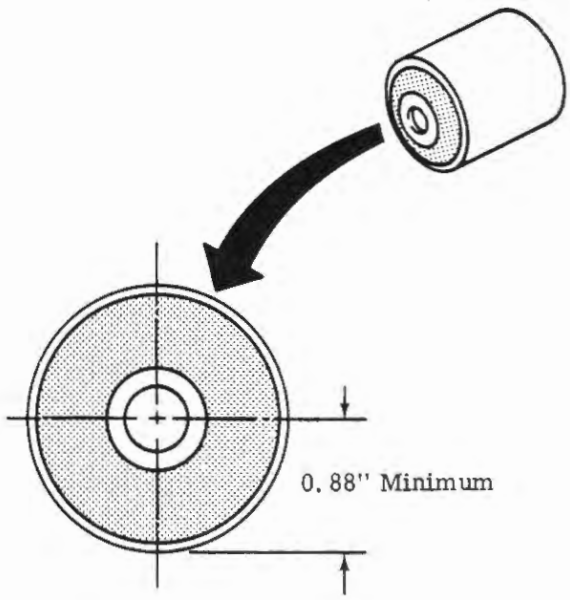

FORWARD INBOARD MOUNT

Figure 5-3A. Engine Mount Inspection

inch-pounds. Torque aft inboard engine mount bolt 290 to 410 inch-pounds.

c. Check clearance between forward face of engine shock mount outer ring and engine forward support fitting as shown in figure 5-3A.

Note

The outer ring may be shifted aft until its forward face is flush with the forward face of the engine ring support. This is acceptable provided the minimum clearance between the forward face of the ring support and the support fitting is .10 inch. The outer ring forward face shall not be less than flush with the support ring.

d. Connect and clamp electrical wiring to the following units. Safety all electrical connectors.

1. EGT thermocouple harness
2. Anti-ice valve
3. Tachometer-generator
4. Oil temperature bulb
5. Anti-ice pressure switch
*6. Ice interpreter
7. Anti-ice relay
8. Ignition generator
*9. Ice detector
10. Starter-generator
11. Oil pressure transmitter
12. Fuel flowmeter

*Applicable to left engine only.

e. Connect oil line to oil pressure transmitter.
f. Connect cooling duct to starter-generator.
g. Connect bonding cables to aft engine mounting bracket.
h. Connect the following at the pylon firewall:
1. Bleed air ducting
2. Main fuel hose
3. Compressed gas hose (PT5)
4. Hydraulic supply and return hoses.
i. Connect throttle linkage to fuel control unit bellcrank.
j. Install bolts attaching throttle linkage bracket to fuel-oil cooler.
k. Install clamps securing throttle linkage to engine.
l. Install engine cowling.
m. Connect fire sensing elements.
n. Check power control rigging.
o. Perform engine motoring check. (Refer to Engine Maintenance Manual SEI-136).
p. Perform engine operational check.

ENGINE ASSEMBLY. (See figures 5-4 and 5-5.)

ENGINE GROUND OPERATION.

Note

If the Engine Operation Procedures in this manual conflict with those in the Approved Airplane Flight Manual, the Flight Manual procedures should be followed.

a. Prestart Inspection. Before operating the engine, perform the following:
1. Assure that engine intake and exhaust areas are clear of personnel, tools, and equipment.
2. Remove inlet and exhaust dust plugs from engine.

CAUTION

Do not damage ice detector probe when removing inlet dust plug from left engine.

3. Inspect to assure that engine inlet and exhaust ducts are free from obstructions, damage, and foreign objects (including ice).
4. Check that engine vent and drain lines are not obstructed.
5. Inspect ramp beneath engine to detect evidence of fuel or oil leaks.
6. If an engine has been exposed to freezing rain or snow, ice and snow may have accumulated in the inlet duct, compressor, and turbine sections. If this has occurred, the engine rotor should be checked for free rotation and the engine should be thawed prior to operation.
7. Check engine oil level. (Refer to ADDING OIL, Section I.)
8. Drain approximately 2 ounces of fuel from each fuel sump quick-drain valve.
9. Check the Aircraft and Engine Log Books for comments on condition and servicing.
10. Assure that wheels are chocked.

b. Before Starting Engines.
1. Panel Switches - OFF (except Firewall Shutoff)
2. Circuit Breaker Panel - Breakers depressed
3. Thrust Levers - CUTOFF
4. Spoilers - RETRACT
5. Flaps - UP
6. Gear Switch - DOWN
7. Battery Switch - ON
8. [A] Master Caution Light - Lighted
9. [A] Fire Detect Press-To-Test Buttons - Depress
10. [B] Fire Detect Test Switch - TEST
11. [A] Warning Light Test/Horn Silence Switch - WARN LTS TEST
12. Landing Gear Lights - Three (3) green lighted
13. Fuel Pump Switches - Check operation. Low pressure lights not lighted.
14. [A] Inverter Switch - MAIN
15. Hydraulic Pressure - Check

Note

If hydraulic pressure is below 1000 psi, set hydraulic pump switch to ON. When 1000 psi is attained, set switch to OFF. On [A] aircraft, the hydraulic pressure gage is plumbed to the air side of the accumulator and therefore indicates accumulator preload with zero hydraulic system pressure. On [B] aircraft, the direct reading gage is plumbed to the pressure side of the accumulator and indicates actual system pressure at all times.

16. [A] Inverter - OFF
17. Park Brake - Set.

c. Starting Engines (Either Engine)

CAUTION

If the aircraft batteries have been completely discharged and then recharged with an external power unit, allow a minimum of 15 minutes charging time prior to starting aircraft on battery power or battery damage may result.

1. Main Fuel Boost Pump Switch - ON
2. Starter/Generator Switch - START
3. [C] Ignition Switch - NORMAL at 6% engine rpm
4. Thrust Lever - IDLE at 6% rpm
5. [C] Ignition Switch - OFF at EGT rise

Note

On [D] aircraft, ignition is provided automatically by advancing thrust lever to IDLE when starter switch is energized.

[A] Aircraft 23-003 thru 23-014.
[B] Aircraft 23-015 thru 23-099.
[C] Aircraft 23-003 thru 23-008.
[D] Aircraft 23-009 thru 23-099.

6. Starter Generator Switch - GEN at idle rpm
7. Inverter Switch - MAIN
8. Hydraulic Pressure Gage - Check to assure pressure rise.
9. Engine Instruments - Check for following indications after the engine has stabilized at idle.
   (a) Engine Speed - 48 (±1)%
   (b) Oil Pressure - 5 to 20 psi
   (c) Exhaust Gas Temperature (EGT) - 650° C (1202° F) maximum
10. Start opposite engine using above procedure.

Note

Engine ground operation at 100% rpm in excess of 30 seconds may result in nacelle discoloration.

d. Engine Shutdown

1. Under normal conditions, allow engine to stabilize at idle for approximately 2 minutes to dissipate heat and stabilize operating temperatures.

CAUTION

In an emergency such as an overtemperature, flameout, or loss of oil pressure, shut the engine down immediately.

2. Thrust Lever - CUTOFF on engine started first.

Note

Continue operation of Main Fuel Boost Pump until engine stops rotating, then set switch to OFF.

3. Operate flaps to bleed down hydraulic pressure, then check buildup of hydraulic pressure to verify operation of opposite engine hydraulic pump.
4. Shut down opposite engine in accordance with step 2, above.
5. Inverter Switch - OFF
6. Battery Switch - OFF.

ENGINE EMERGENCY PROCEDURES - GROUND OPERATION ONLY. Corrective action is required immediately to prevent engine damage when an abnormal condition such as an overtemperature, overspeed, flameout, or compressor stall occurs during engine operation. Methods of recovery from these conditions are as follows:

a. Overtemperature.

1. Whenever the exhaust gas temperature (EGT) exceeds the established limits, first retard the thrust lever to bring EGT within operating limits. If it still appears that EGT will exceed limits, move the thrust lever to OFF. Do not allow EGT to exceed the limits before taking corrective action.

2. Record the temperature and duration of the overtemperature, then determine engine serviceability per Engine Maintenance Manual (SEI-136).

b. Overspeed.

1. If the MAXIMUM engine speed stabilizes at 103.5 (±0.5)% (16,995 to 17,160 rpm) and cannot be reduced by retarding the thrust lever to IDLE, engine speed is being controlled by the overspeed governor. Retard the thrust lever to OFF.
2. Remove and check the fuel pump and the fuel control fuel filters for contamination. Clean the fuel filters and flush the fuel control. If this does not correct the overspeed condition, replace the fuel control.

Note

If the fuel control fails, the overspeed governor limits engine speed to 103.5 (±0.5)% (16,995 to 17,160 rpm).

3. If the engine exceeds a stabilized speed of 101.2% (16,700 rpm) or a transient speed of 108% (17,820 rpm), determine engine serviceability per Engine Maintenance Manual (SEI-136).

Note

Engine operation above 17,820 rpm requires an engine inspection as defined in the Engine Maintenance Manual.

4. Shut the engine down. Refer to the Engine Maintenance Manual (SEI-136) trouble shooting section and correct the cause of the overspeed.

c. Flameout. A flameout is usually caused by imbalance in the fuel-air ratio in the engine combustion section. The flameout is accompanied by a decreasing EGT, RPM, and EPR along with a change in pitch of normal engine sound. If an engine flameout occurs, do the following:

1. Thrust Levers - CUTOFF. Motor the engine with the starter to purge the engine of residual fuel.
2. During coastdown, check for any unusual noise from the rotating components.

d. Compressor Stall (Ground Operation Only).

1. Compressor stall is recognized by overtemperature, speed "hang-up," and a rapid audible change in the characteristic sound of normal engine operation. The stall usually occurs during rapid acceleration and may result from improper adjustment or malfunctioning components in the variable geometry system.

Note

The objective of the technique for handling the thrust lever during a stall condition is to recover from the stall and return the engine to IDLE speed for a cooling stabilization period before shutting the engine down.

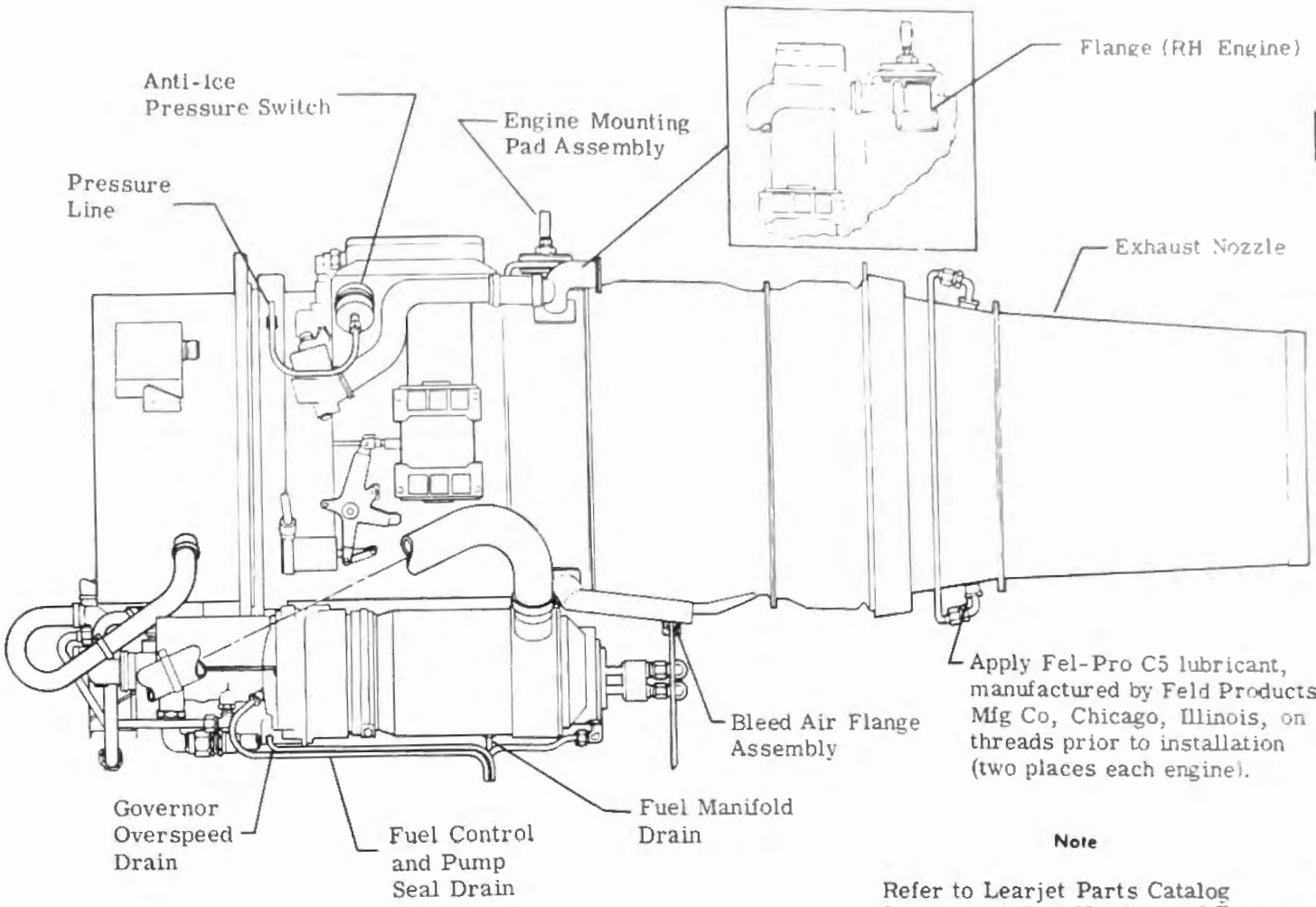

ENGINE - LH Side

Note

Refer to Learjet Parts Catalog for current Part Numbers of Engine Demountable Components.

* Lubricate male spline prior to installation with either of the following lubricants: Plastilube Molly No. 3, manufactured by The Warren Refining Co, Cleveland, Ohio, or Mollylube 503 grease, manufactured by the Bel-Ray Co, Inc, P. O. Box 526, Farmingdale, New Jersey 07727.

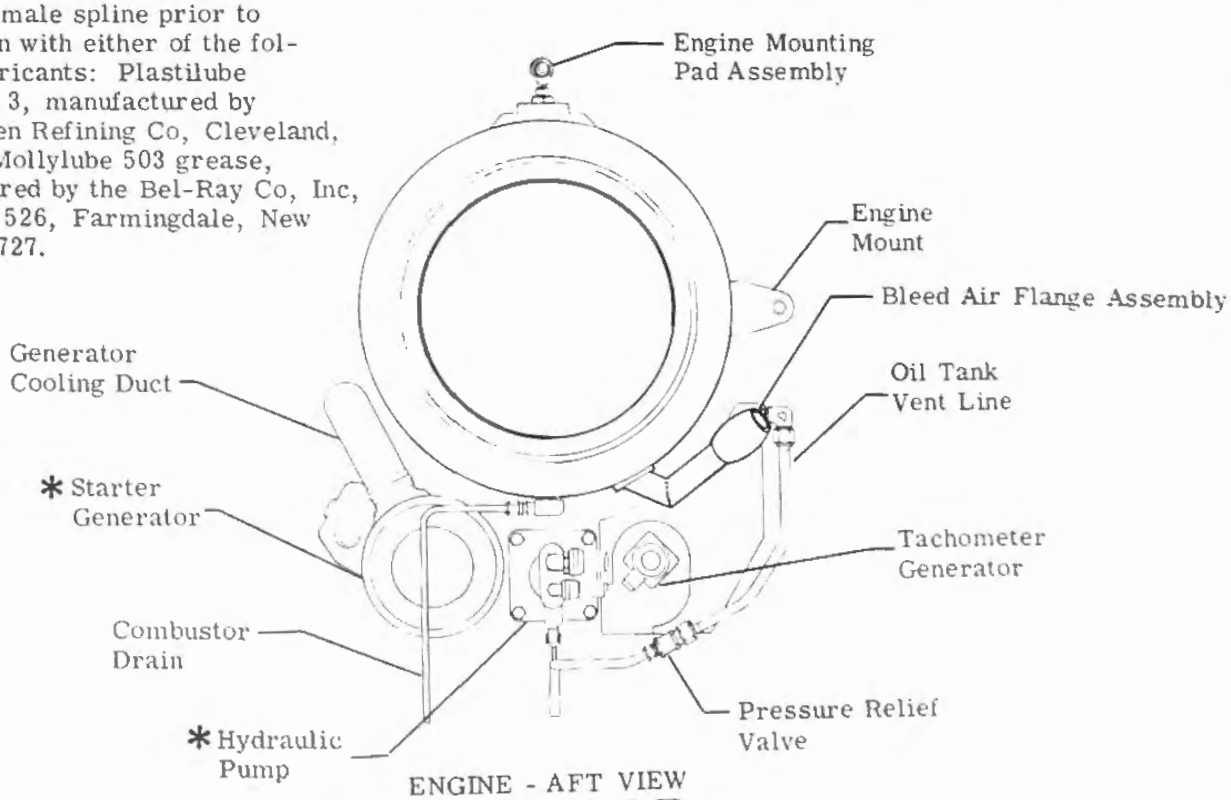

ENGINE - AFT VIEW

Figure 5-4. Engine Assembly (Sheet 1 of 2)

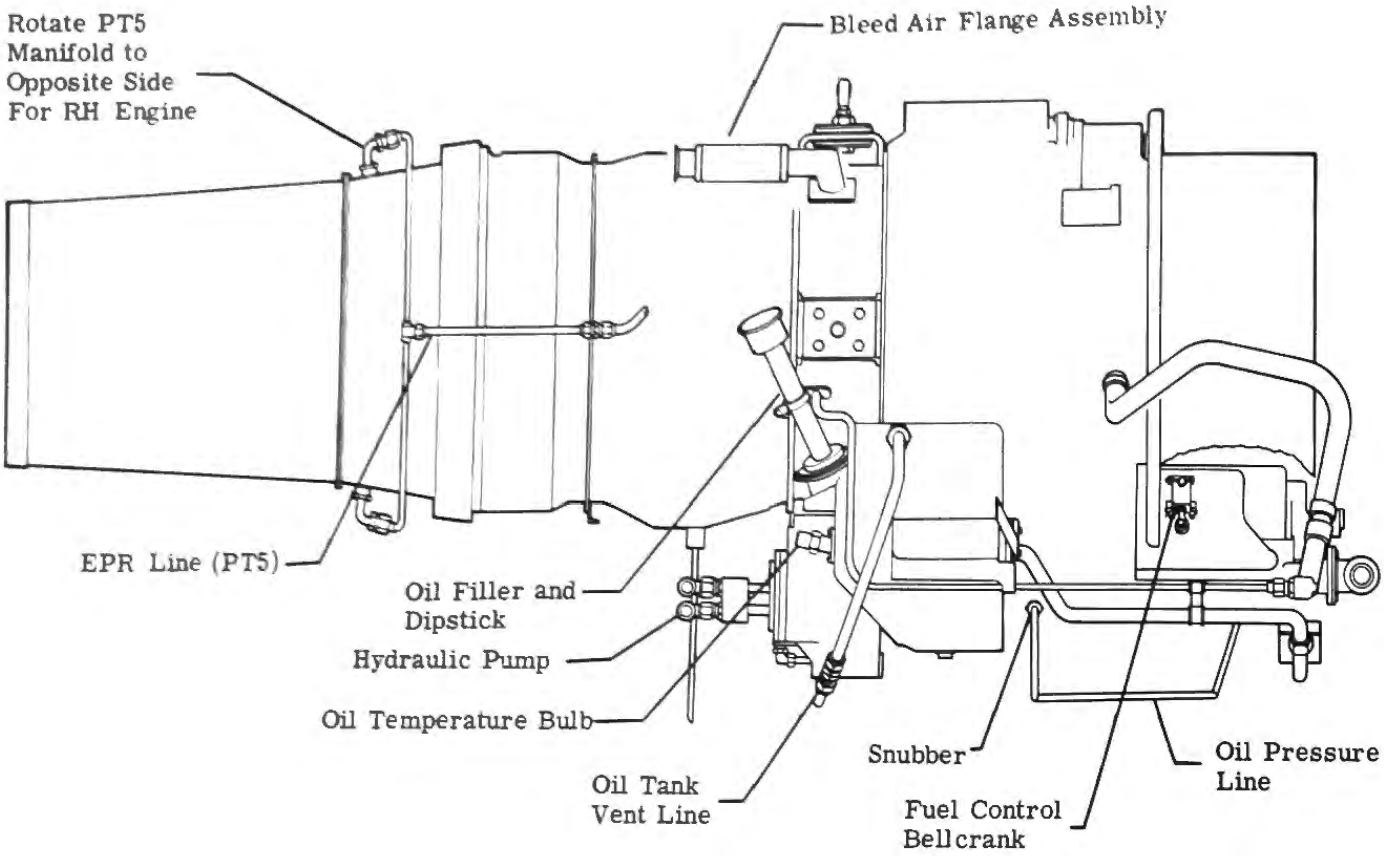

ENGINE - RH SIDE

Note

Refer to Lear Jet Parts Catalog for current Part Number of Engine Demountable Components.

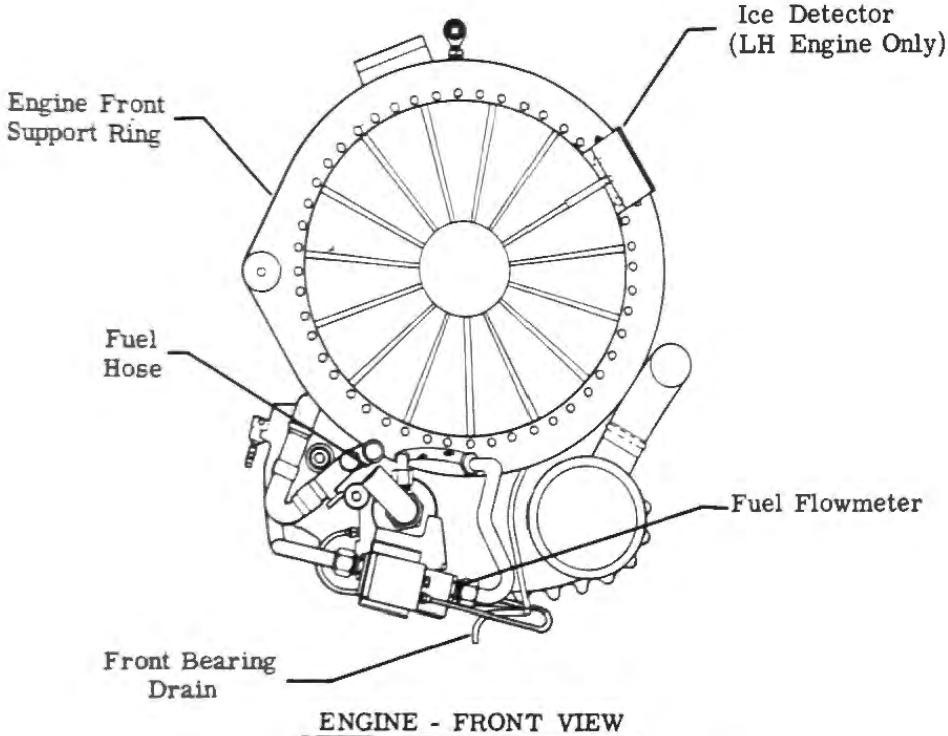

ENGINE - FRONT VIEW

Figure 5-4. Engine Assembly (Sheet 2 of 2)

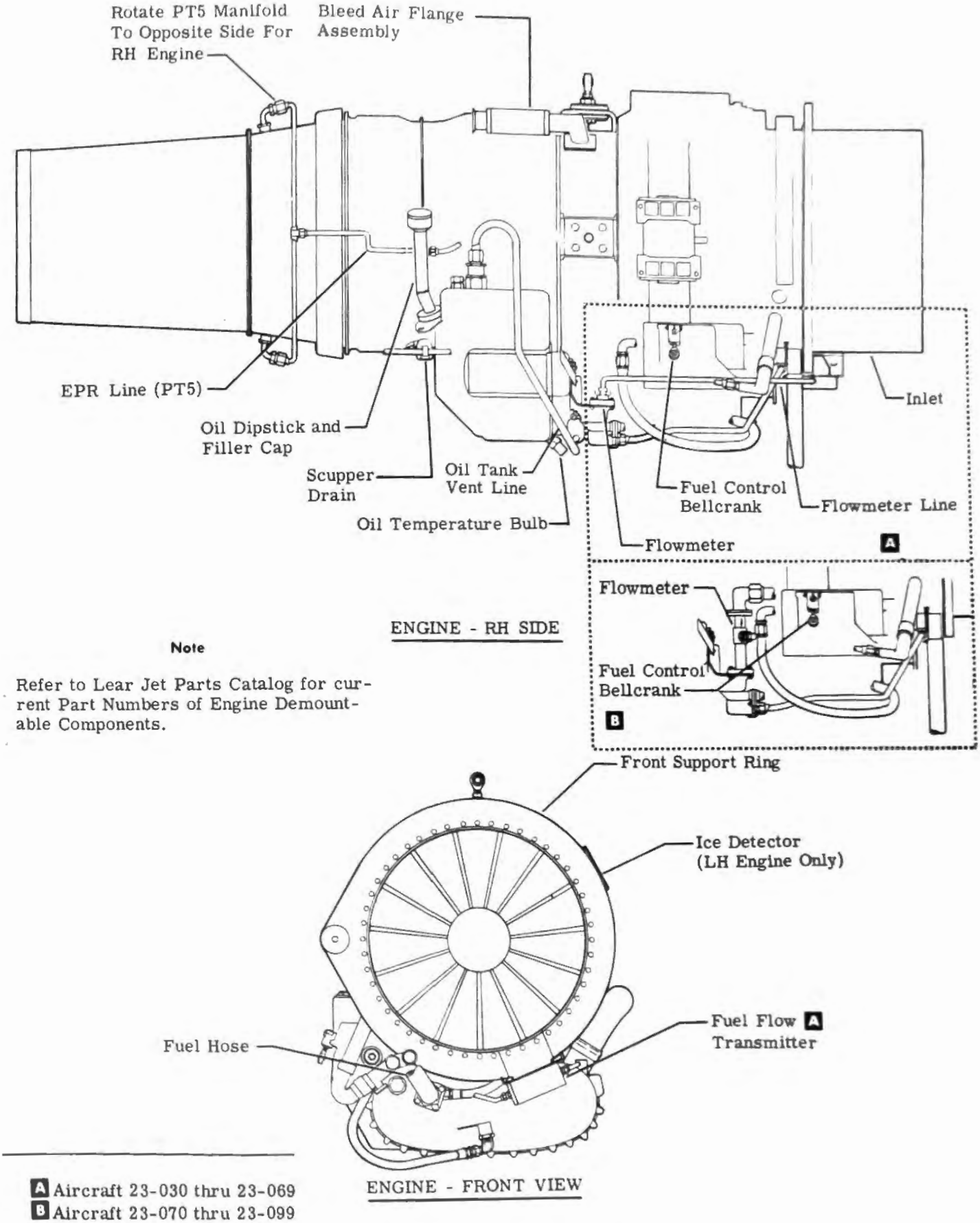

Note

Refer to Lear Jet Parts Catalog for current Part Numbers of Engine Demountable Components.

A Aircraft 23-030 thru 23-069
B Aircraft 23-070 thru 23-099

Figure 5-5. Engine Assembly (Sheet 1 of 2)

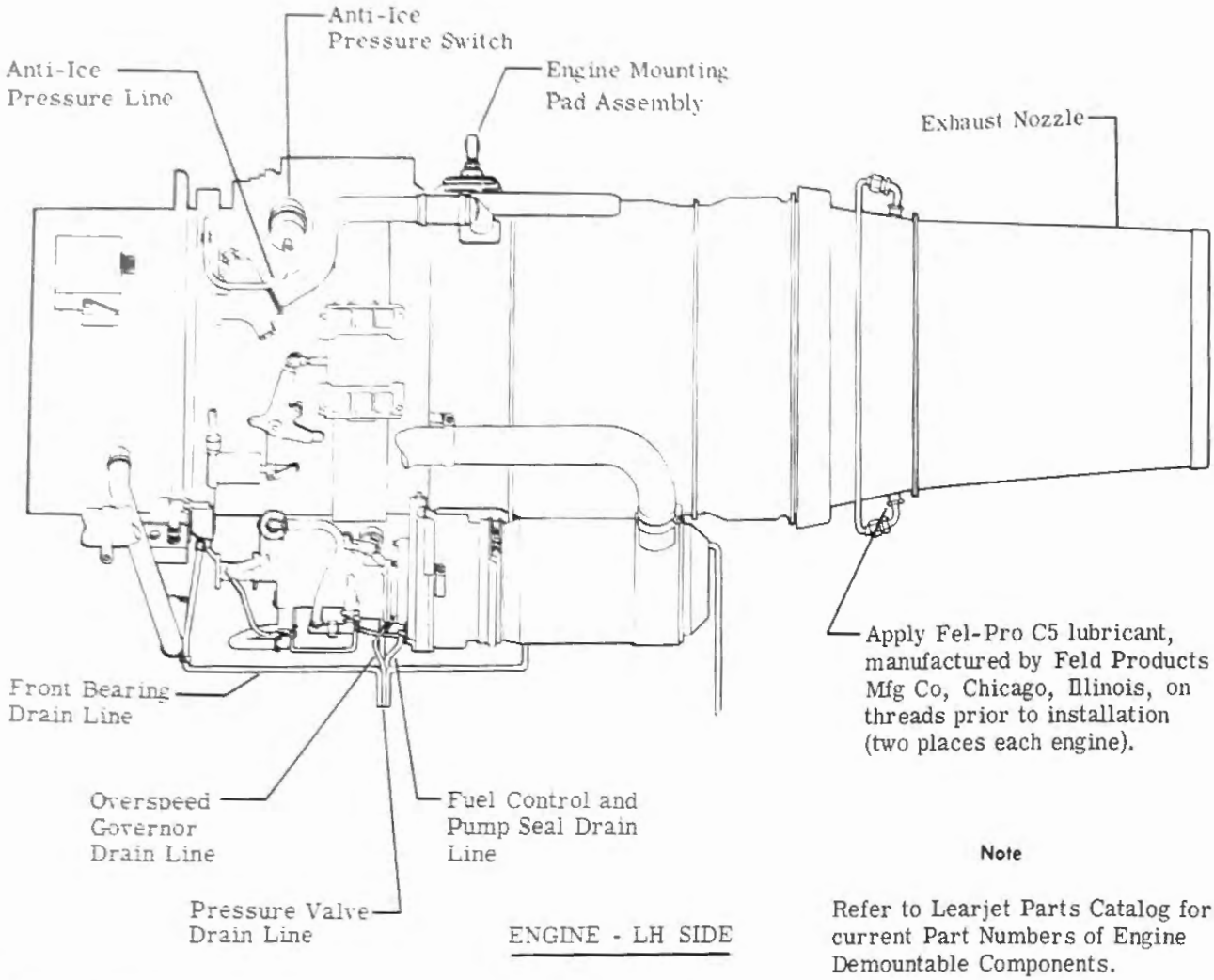

ENGINE - LH SIDE

Note

Refer to Learjet Parts Catalog for current Part Numbers of Engine Demountable Components.

* Lubricate male spline prior to installation with either of the following lubricants: Plastilube Molly No. 3, manufactured by The Warren Refining Co, Cleveland, Ohio, or Mollylube 503 grease, manufactured by the Bel-Ray Co, Inc, P. O. Box 526, Farmingdale, New Jersey 07727.

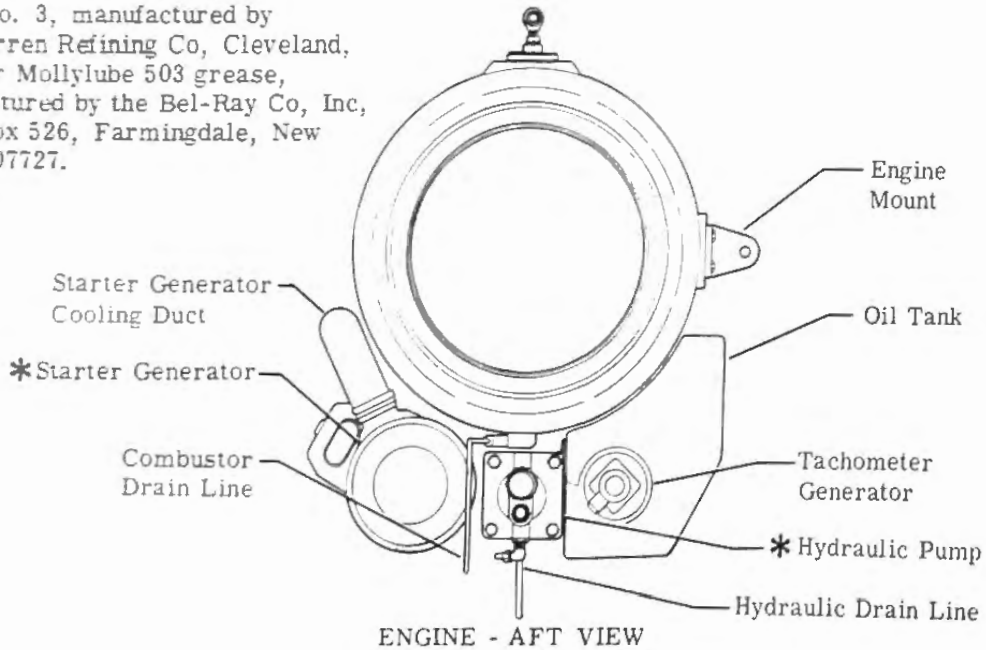

ENGINE - AFT VIEW

Figure 5-5. Engine Assembly (Sheet 2 of 2)

2. As soon as a stall is recognized or the stall occurs, immediately retard the thrust lever toward IDLE. Use care to assure that the engine does not flame out because of too rapid a movement of the thrust lever; however, the movement must be rapid enough to prevent overtemperature and subsequent damage to the engine.

CAUTION

If EGT increases too rapidly to attempt recovery after a stall has occurred, move the thrust lever to OFF.

Note

Successful recovery from a stall depends on how far the condition has progressed. Early recognition will increase the possibility of a quick recovery and lessen the chance of damage from overtemperature.

3. If the stall condition is corrected after the initial movement of the thrust lever toward IDLE, advance the thrust lever slightly to prevent flameout, but not so far as to cause re-entry into stall.
4. After regaining control of the engine, retard the thrust lever to IDLE. Allow the engine to stabilize for a 2-minute cooling period, then shut it down.
5. During the coastdown, listen for any unusual rubbing, clicking, or grinding noises. Inspect the engine for any damaged, loose, or missing parts, Give special attention to the variable geometry system linkage. Inspect the compressor rotor interior for damaged blades by looking through the compressor inlet section. If no defects are noted, motor the engine and check for any unusual noises. Take all possible measures to eliminate the cause of the stall before restarting the engine.

ENGINE POWER CONTROLS. (See figure 5-6.) Two thrust levers, located on the cockpit center pedestal, control engine power by regulation of each engine fuel control unit. The thrust levers are connected to the fuel control units by cables with adjustable clevis ends. Positive stops are provided in the thrust lever quadrant to retain the thrust levers in the CUTOFF position and prevent inadvertent reduction of thrust below the IDLE position. An adjustable friction knob is provided to prevent thrust lever creep.

REMOVAL AND INSTALLATION OF ENGINE POWER CONTROLS. Removal and installation of engine power control components in the center pedestal should be performed as shown in the exploded view sequence in Section II.

POWER CONTROLS - RIGGING. (See figure 5-6.)
a. Remove the serrated bellcrank from the fuel control serrated shaft.
b. Set the fuel control pointer to idle and insert rig pin through pointer and indicator plates.
c. Set the applicable thrust lever on the center pedestal to the idle position.
d. Install serrated bellcrank on fuel control shaft and adjust and connect thrust lever linkage to bellcrank. Do not tighten bellcrank attachment bolt at this time.

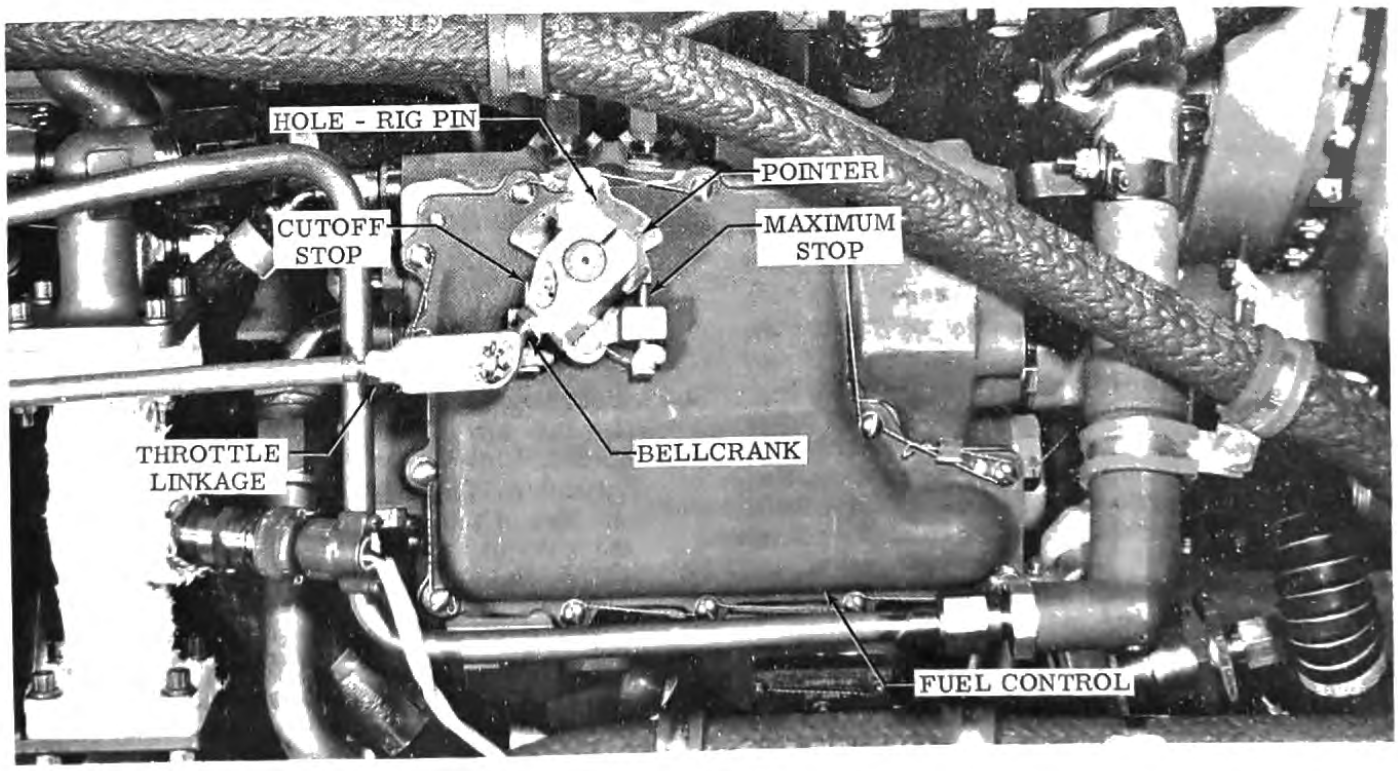

Figure 5-6. Rigging Power Controls

Note

For initial rigging, the bellcrank should be indexed approximately 180° from the fuel control pointer.

e. Remove rig pin.
f. Set applicable thrust lever to maximum position. The thrust lever should have cushion with the fuel control bellcrank against the maximum stop.

CAUTION

The maximum stop is safetied and sealed at the factory and no adjustment is allowed. If adjustments are necessary to obtain the requirements in step f, they should be made in the throttle linkage or by repositioning the serrated bellcrank on the fuel control shaft.

g. Retard thrust lever to the cutoff position. The thrust lever should have cushion with the fuel control bellcrank against the cutoff stop.

CAUTION

The cutoff stop is safetied and sealed at the factory and no adjustment is allowed. If adjustments are necessary to obtain the requirements in step g, they should be made in the thrust lever linkage.

h. With the thrust lever in cutoff, check for minimum clearance of 0.05 inch between the bellcrank and the thrust lever linkage end clevis.

Note

Clearance is obtained by adjusting the bellcrank rod end.

i. Tighten bellcrank attachment bolt.
j. Set the thrust lever to the maximum and cutoff positions while assuring that the requirements in steps f and g are still attained.
k. Run-up engine and perform operational check.

AIRCRAFT EQUIPPED WITH TWO-PIECE CONTROLEX THROTTLE CABLES. The throttle cable has linear-mounted ball bearings that are held in place by ball separators and outer races. Located between the ball bearings is a grooved center race where motion is transmitted with a minimum of friction from thrust lever to engine fuel control bellcrank. The outer races, ball separators, ball bearings and center race are encased in flexible metal tubing. Cable removal and installation is made easier by providing a forward and an aft section coupled together by a quick-disconnect. The forward throttle cable end is connected by a terminal to the thrust lever, located at the center pedestal. The forward throttle cable is routed under the center floorboards, through a pressure seal at frame 15, through the keelbeam, and then into the tailcone area. At this location, the forward cable is coupled to the aft cable by a quick-disconnect. The aft cable is routed through a cable guide, mounted on the engine pylon firewall and to the right side of the engine. At the end of the cable there is a clevis provided which is connected to the engine fuel control bellcrank.

THROTTLE CABLE HANDLING. (See figure 5-6A.) Throttle cables must be handled carefully to avoid permanent damage by excessive bending and twisting. Throttle cables are shipped from the factory in a figure 8 configuration and should be stored in the same manner.

THROTTLE CABLE REMOVAL. (See figure 5-6B.) The following procedure is applicable for removal of either throttle cable. It is recommended that one cable be removed and new cable installed prior to removing the remaining cable. This will provide a guide for routing, clamping, and positioning the new cables.

CAUTION

It is extremely important that the throttle cable be handled as a delicate instrument. Bending of the cable in the wrong plane will result in jamming of the throttles.

a. Remove the tailcone access door and disconnect both aircraft batteries. Remove batteries from the aircraft.
b. Remove lower engine nacelle.
c. Remove asbestos wrap from throttle cable.
d. Remove safety wire and disconnect throttle cable at ball joint connector (refer to detail "H").
e. Remove safety wire and loosen jamnuts securing cable to cable support bracket. Remove one jamnut and washer. The remaining jamnut will be removed when cable is pulled clear of bracket (refer to detail "G").
f. Remove clamps securing throttle cable to engine. Pull cable clear of bracket and remove remaining washer and jamnut.
g. Remove bolts securing throttle cable guide to pylon firewall. This will allow removal of cable without binding inside the pylon (refer to detail "F").
h. Remove support clamps and support halves and disconnect cable quick-disconnect.
i. Pull throttle cable out through tailcone access opening while at the same time feeding the cable through the pylon.
j. Remove all center access panels from beneath the aircraft.
k. Remove clamps securing throttle cable to aircraft structure (refer to detail "D").
l. Remove carpet and floorboards from area between center pedestal and frame 15.
m. Remove screws securing fuel control panel to center pedestal. Lift fuel control panel sufficiently to gain access to electrical plug and disconnect plug. Remove remaining panels from center pedestal in the same manner.

n. Remove screws securing pedestal extension covers to floor structure and remove pedestal extension covers from aircraft. Remove screws and quadrant cover from pedestal.
o. Remove lockwire from ball joint and disconnect ball joint connector from throttle cable (refer to detail A).
p. Remove dust cap. Remove lockwire and jamnut securing cable to throttle cable bracket.
q. Remove screws and throttle cable bracket.
r. Remove cable retainers and sealant at frame 15 feedthrough (refer to detail "C").
s. Pull cable from aircraft until cable clears throttle control bracket, remove remaining jamnut, and continue pulling cable clear of aircraft.

THROTTLE CABLE INSTALLATION. (See figure 5-6B.)
a. Install the forward throttle cables as follows:

CAUTION

It is extremely important that the throttle cable be handled as a delicate instrument. Bending of the cable in the wrong plane will result in jamming of the throttle.

Note

The following procedure is applicable for either forward throttle cable.

1. The throttle cables are shipped in a figure 8 configuration. To prevent damage, unfold as shown in steps 1 through 6 of figure 5-6A.
2. The forward throttle cables have a built-in 90° bend. The cables must have the internal components (see figure 5-6A) aligned properly prior to installation. This can be accomplished by laying the cable on the floor and, with one man holding the 90° bend at one end vertically, have another man establish a hump at this end and carry it through to the opposite end as shown in step 7 of figure 5-6A.
3. Stroke the cable rod back and forth by hand; cable rod should move freely without any sign of excessive or increasing loads or erratic movement.
4. With the throttle cable properly aligned, form a moderately large loop at the aft end (quick-disconnect end). Retain this loop during routing of throttle cable. This helps prevent the cable from twisting during installation.
5. Insert end of throttle cable through tailcone access opening and route through keel beam to frame 15 feedthrough (refer to detail "J").
6. Insert end of throttle cable through applicable frame 15 feedthrough and route cable forward and up to the center pedestal (refer to details "K" and "L").
7. Install jamnut on throttle cable barrel (cockpit end). Adjust jamnut as required to position cable barrel the same as the opposite cable. Do not connect or clamp cable at this time.
8. Repeat steps 1 through 7 to install the opposite forward cable.

b. Install the right aft throttle cable as follows: (See figure 5-6B.)

Note

The right and left aft throttle cables are of different lengths. The left aft cable is longer and is routed in a loop underneath the aft portion of the engine.

1. Prepare the cable for installation as shown in details "M" and "N".
2. Route cable (end opposite quick-disconnect) through pylon and pylon firewall, assuring that cable does not rotate (refer to detail "P"). As cable is fed through firewall, place cable guide (detail "F") over cable. Continue to feed the cable through the firewall until approximately 44 inches of cable extends from firewall.
3. Connect the forward and aft cables at the quick-disconnect.
4. Check to assure that the cable is properly installed by stroking several times by hand. There shall be no appreciable increase in load.
5. Repeat steps b. 2 through b. 4 of the above procedure to install the left aft throttle cable.

c. Secure cable guides (detail "F") to pylon firewall; connect cable to ball joint connectors at engine (detail "H") and center pedestal (detail "A").
d. Clamp aft cables in same location as old cables were clamped using existing hardware.
e. Clamp forward cables in same locations as old cables were clamped using existing hardware.
f. Install support halves in accordance with details "A," "E," and "G."
g. Seal firewall cable guides on both firewalls as follows:
1. Assure that area to be sealed is free from chips, shavings, dirt, etc.
2. Using a small paint brush, thoroughly clean the area to be sealed with Methyl Ethyl Ketone, or equivalent. Wipe dry with a clean cloth or pipe cleaner before solvent evaporates.
3. Repeat this procedure until there is no discoloration on the drying material.
4. Final clean the area just prior to applying sealant.
5. Apply sealant to the cavities of the cable guide in accordance with APPLYING PYLON AND FIREWALL SEALANTS, Section II of this manual.
h. Rig throttle cables per POWER CONTROLS RIGGING, this section.
i. Install screws and quadrant cover to pedestal. Install pedestal extension covers and install screws securing pedestal extension covers to floor structure.
j. Install center pedestal panels by connecting electrical plugs and securing panels with existing screws.
k. Install floorboards and carpet.
l. Install clamps securing throttle cable to aircraft structure.
m. Install all center access panels beneath the aircraft.

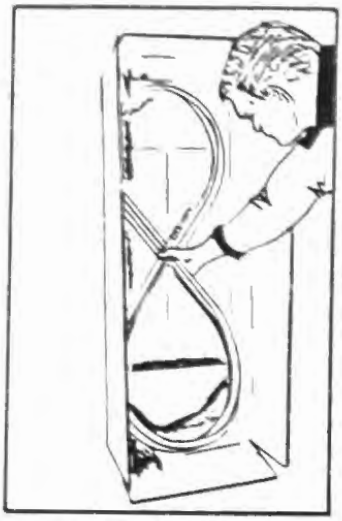

1. The throttle control cable is shipped in a figure 8 configuration.

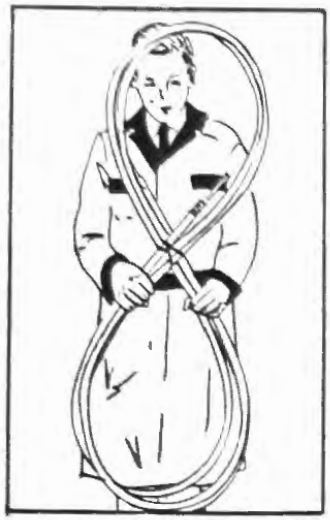

2. Hold throttle cable upright in both hands.

3. Remove shipping wire. Starting with end fitting nearest you, play out loops one at a time without forcing or twisting.

4. Final figure 8.

5. Play out final loop.

6. Throttle control cable is ready for installation.

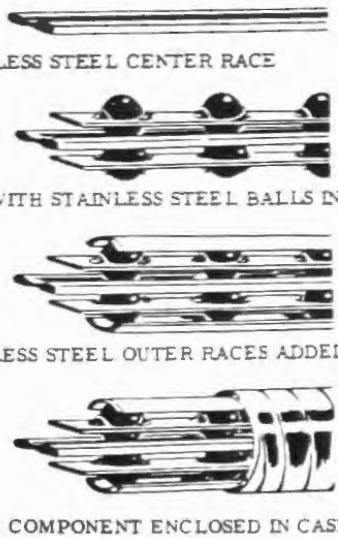

THROTTLE CABLE INTERNAL COMPONENTS

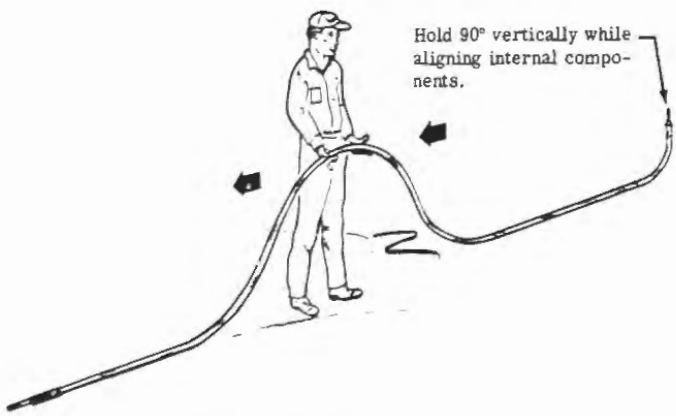

7. Lay throttle cable on floor. With end opposite quick-disconnect held vertically to form a 90° bend, have another man establish a hump in the cable and carry it through to the quick-disconnect as shown. This will straighten the internal components.

STRAIGHTENING THROTTLE CABLE

Figure 5-6A. Throttle Cable Handling

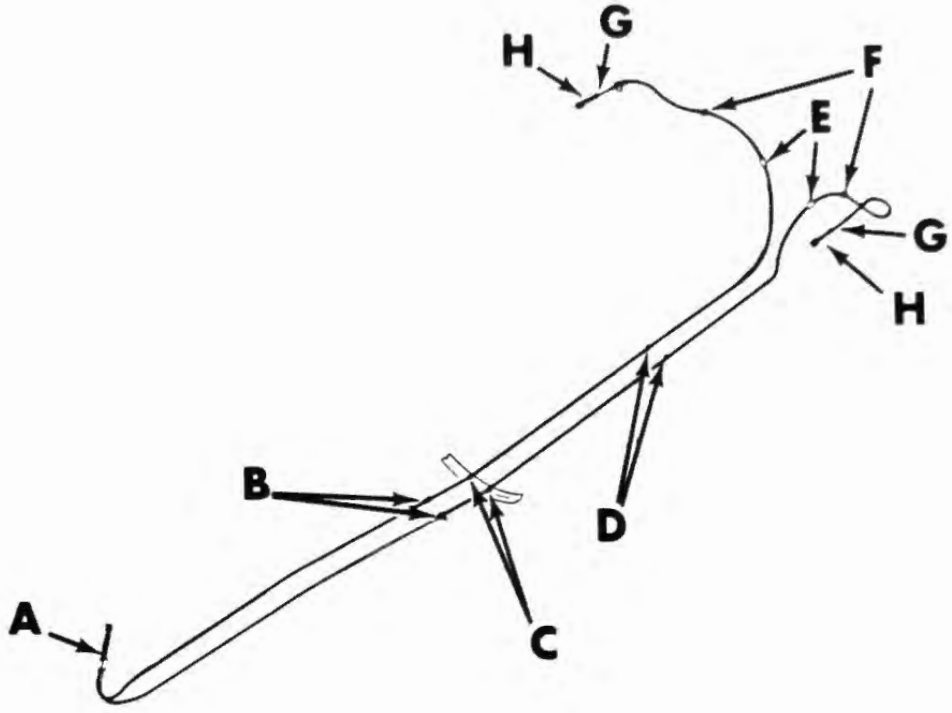

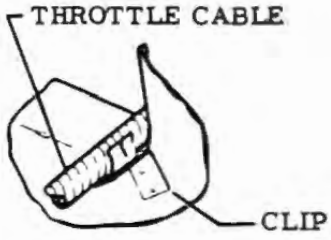

TYPICAL ALONG
CABIN BULKHEADS

B

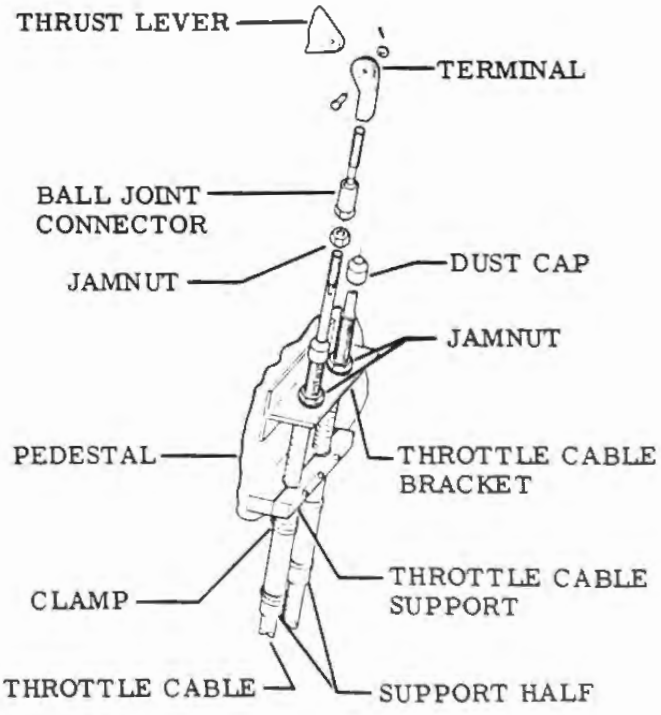

CONTROL PEDESTAL DETAIL

A

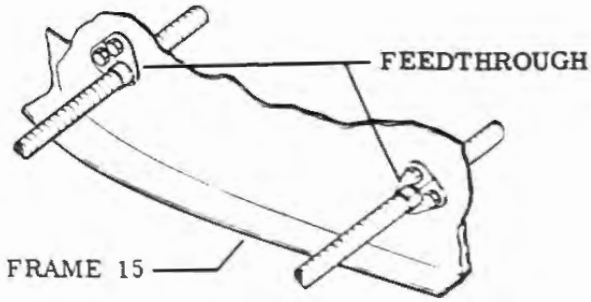

PRESSURIZED BULKHEAD FEEDTHROUGH

C

Figure 5-6B. Throttle Cable Installation (Sheet 1 of 4)

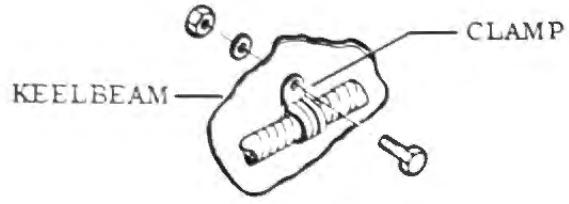

TYPICAL KEELBEAM CLAMP

D

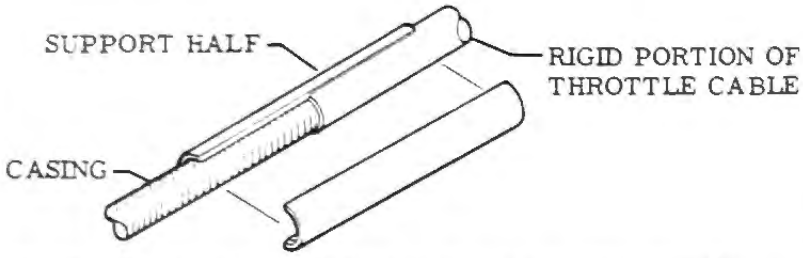

NOTE: Position support halves on cable so that chamfer mates with control cable surface contour.

TYPICAL SUPPORT HALF INSTALLATION

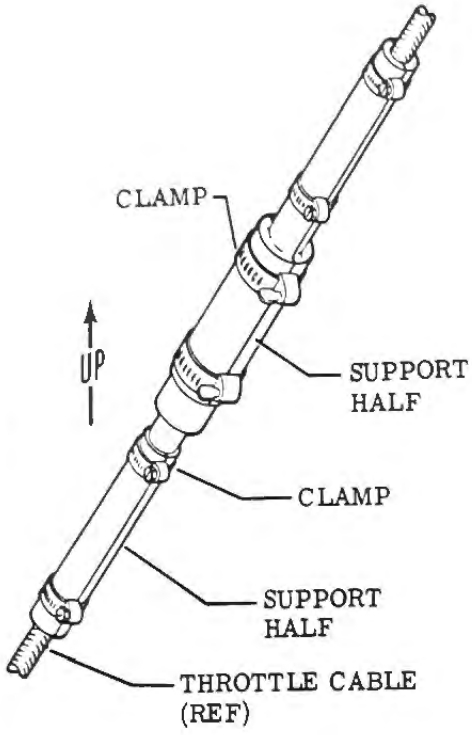

TYPICAL FOR BOTH LH AND RH THROTTLE CABLE QUICK-DISCONNECTS.

E

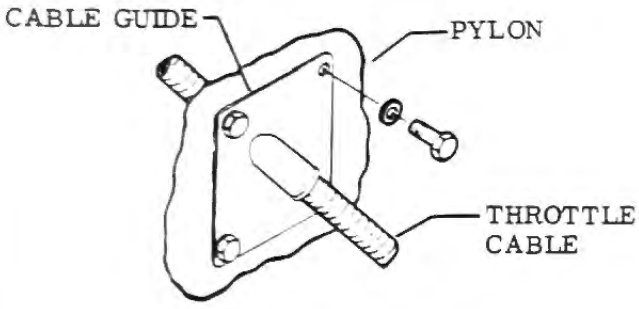

TYPICAL BOTH PYLONS

F

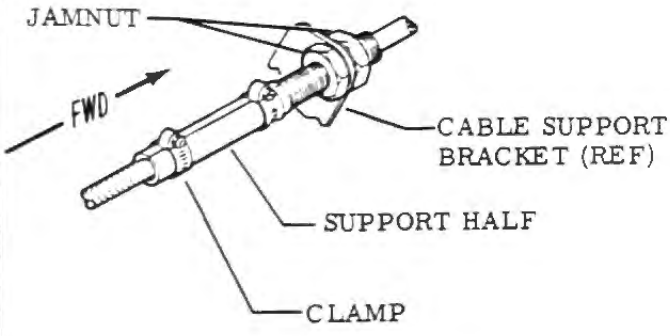

TYPICAL BOTH ENGINES

G

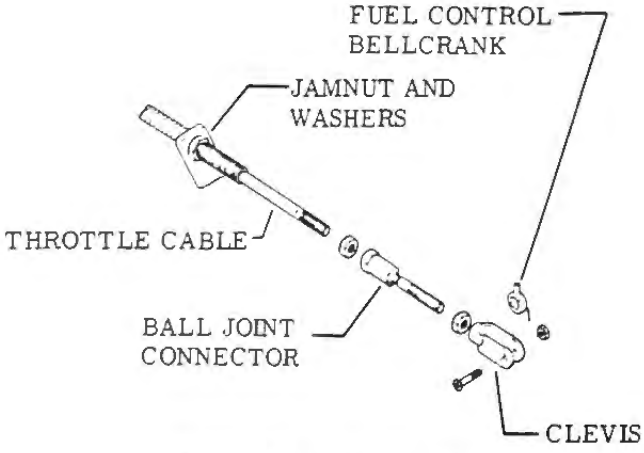

TYPICAL BOTH ENGINES

H

Figure 5-6B. Throttle Cable Installation (Sheet 2 of 4)

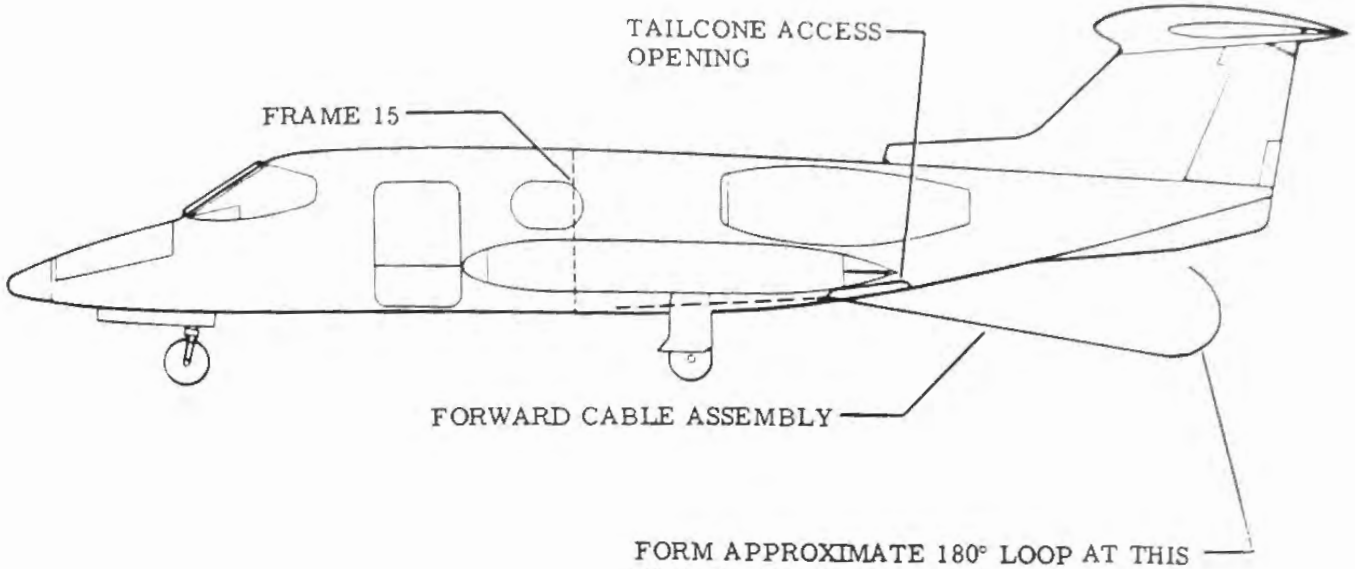

J

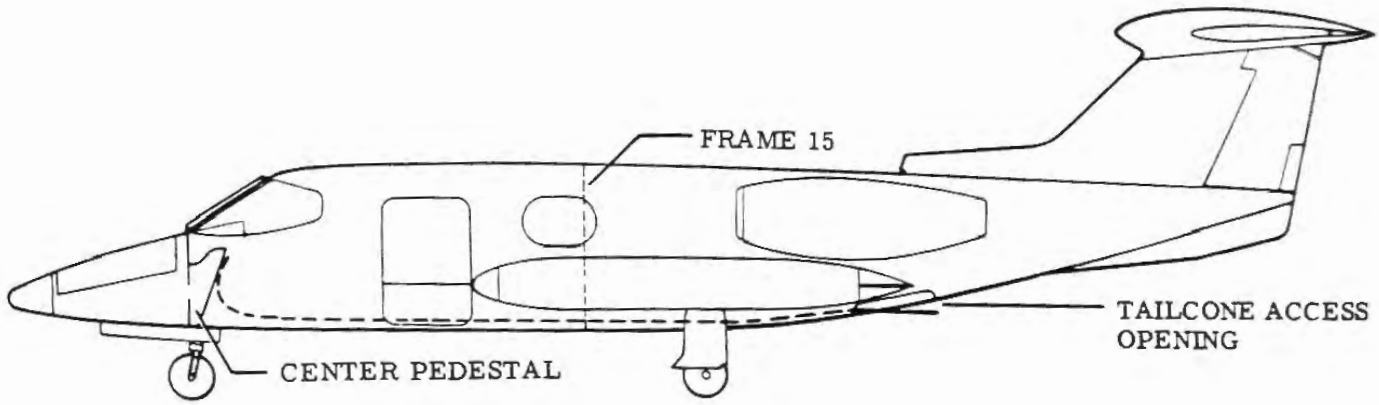

FEED THROTTLE CABLE INTO COCKPIT AS REQUIRED TO ALLOW OPPOSITE END TO CLEAR ACCESS OPENING.

K

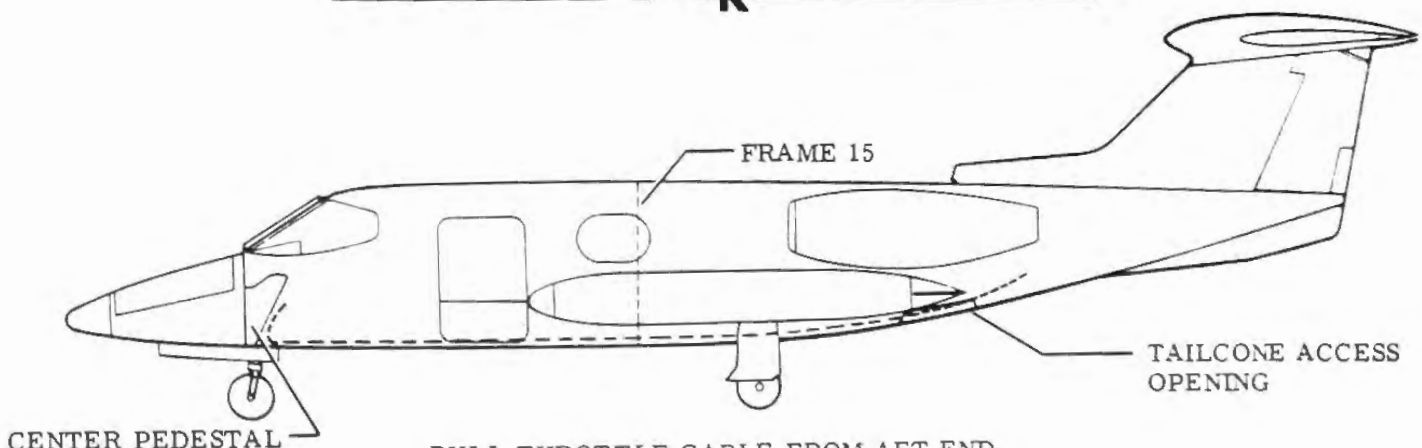

PULL THROTTLE CABLE FROM AFT END UNTIL FORWARD END CAN BE CONNECTED TO THE PEDESTAL.

L

Figure 5-6B. Throttle Cable Installation (Sheet 3 of 4)

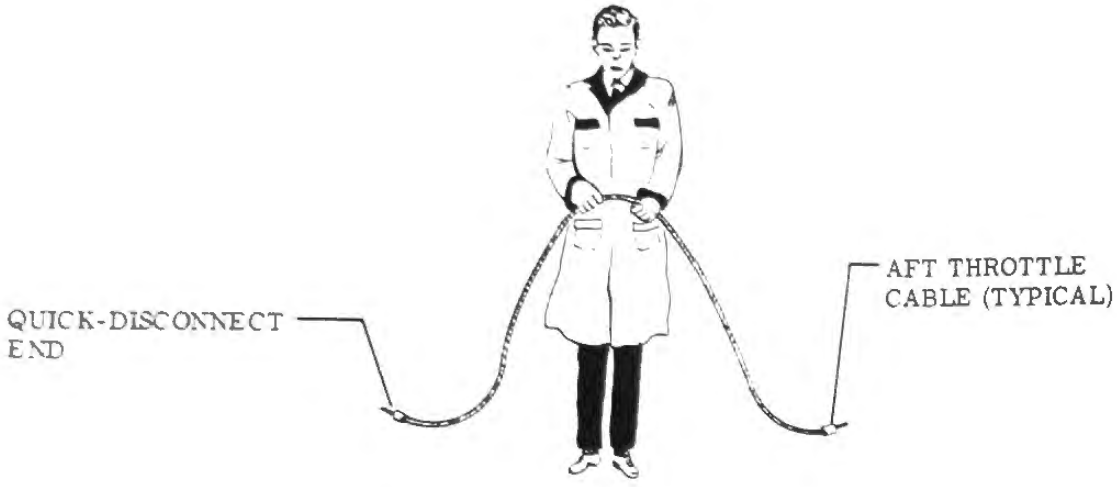

Hold cable up and rotate so that both ends curl up as shown.

M

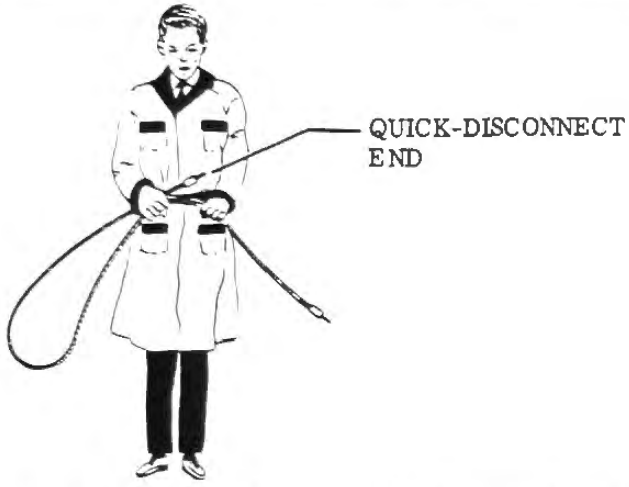

Bring quick-disconnect end up until it is tangent to center bend and can be held with one hand. Do not allow cable to rotate. This will properly align the cable for routing purposes.

N

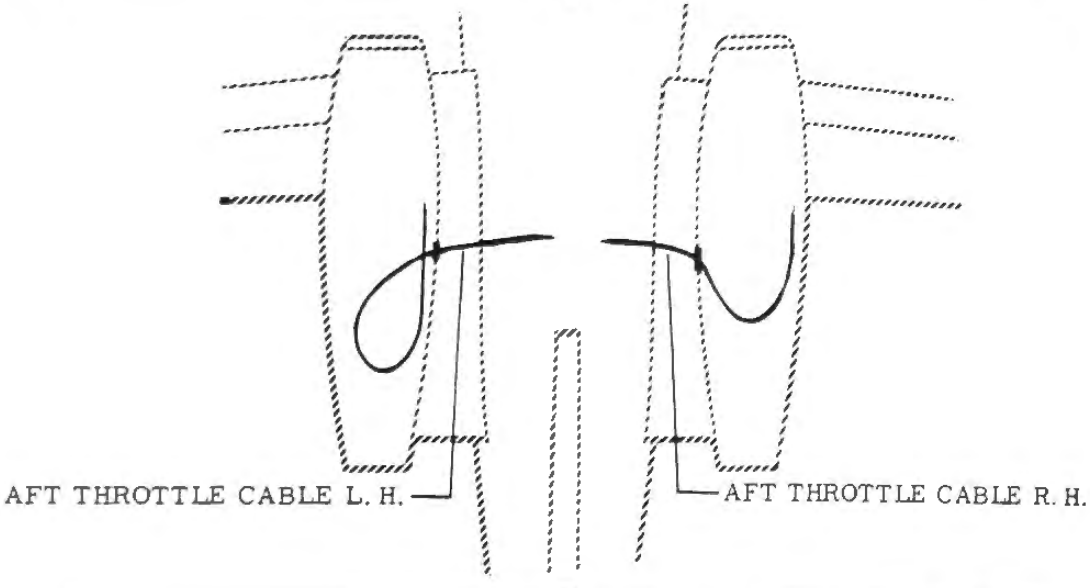

P

Figure 5-6B. Throttle Cable Installation (Sheet 4 of 4)

n. Install asbestos wrap on throttle cable.
o. Install lower engine nacelle.
p. Install aircraft batteries.
q. Connect both aircraft batteries and install the tailcone access door.

ENGINE NACELLES. (See figure 5-7.) Each engine nacelle assembly consists of four sections; a nose cap, a lower section, an upper section, and a rear section. Each section, interlocked and secured with fasteners, is easily removed for engine maintenance and inspection. Airscoops are installed in the nacelles for starter generator and engine cooling. An access plate, secured by fasteners, is installed in the upper nacelle section for access to the engine oil filler and dipstick.

ENGINE FIRE DETECTION SYSTEM. (See figure 5-9.) The engine nacelle areas are equipped with a fire warning detection system. Visual indication is presented to the crew by the FIRE warning lights on the readout panel. The system consists of two control units, located forward of the instrument panel, the nacelle sensing elements, and the warning lights. Two sensing element segments are connected in each nacelle to form the sensing element assembly. Warning is given when the rear nacelle area temperature exceeds 510° F or when the forward nacelle area temperature exceeds 480° F. When the temperature drops to a normal operating range, the system automatically resets and the warning lights go out. PRESS TO TEST switches are installed to check system operation.

FIRE SENSING ELEMENTS. Each engine nacelle fire sensing element assembly consists of two segments. The element is attached to the nacelle by hinge-type clamps. The outer part of the element is Inconel metal tubing which encloses a thermistor core (a ceramic material) containing internal wires. During standby conditions, a small difference in potential is applied across the thermistor. The ceramic material has a negative coefficient of resistance with respect to temperature. The electrical resistance decreases as temperature increases. During normal ambient temperature, the core resistance is relatively high and there is small current flow across the core. An increase in heat produces a decrease in resistance of the ceramic material allowing increased current flow. This signal is applied to the fire detection system control unit.

REMOVAL AND INSTALLATION OF FIRE SENSING ELEMENTS. (See figure 5-9.) The fire sensing elements are replaced by disconnecting the connection joints and removing the element from the hinge-type clamps.

WARNING

Careful attention should be paid to element routing through its attaching clamps. The element should be centered in the clamp or grommet throughout its length. It is not enough that it has clearance from the clamp. It should exert equal pressure on the spring or grommet in all directions when passing through a clamp. Any tendency to press the grommet against the clamp in one direction could eventually cause a false fire warning.

FIRE DETECTION SYSTEM CONTROL UNIT. A control unit is installed for each engine fire detection system. The control unit is an electrical device used to monitor the sensing element resistance. The control unit energizes the FIRE warning light on the readout panel when sensing element resistance drops below 350 ohms.

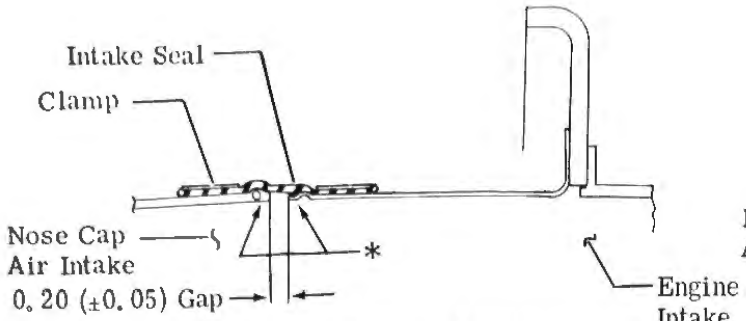

23-003 thru 23-079

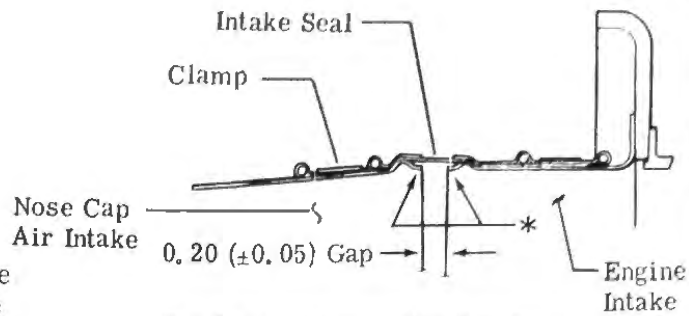

23-080 thru 23-099

ENGINE INLET SEAL INSTALLATION

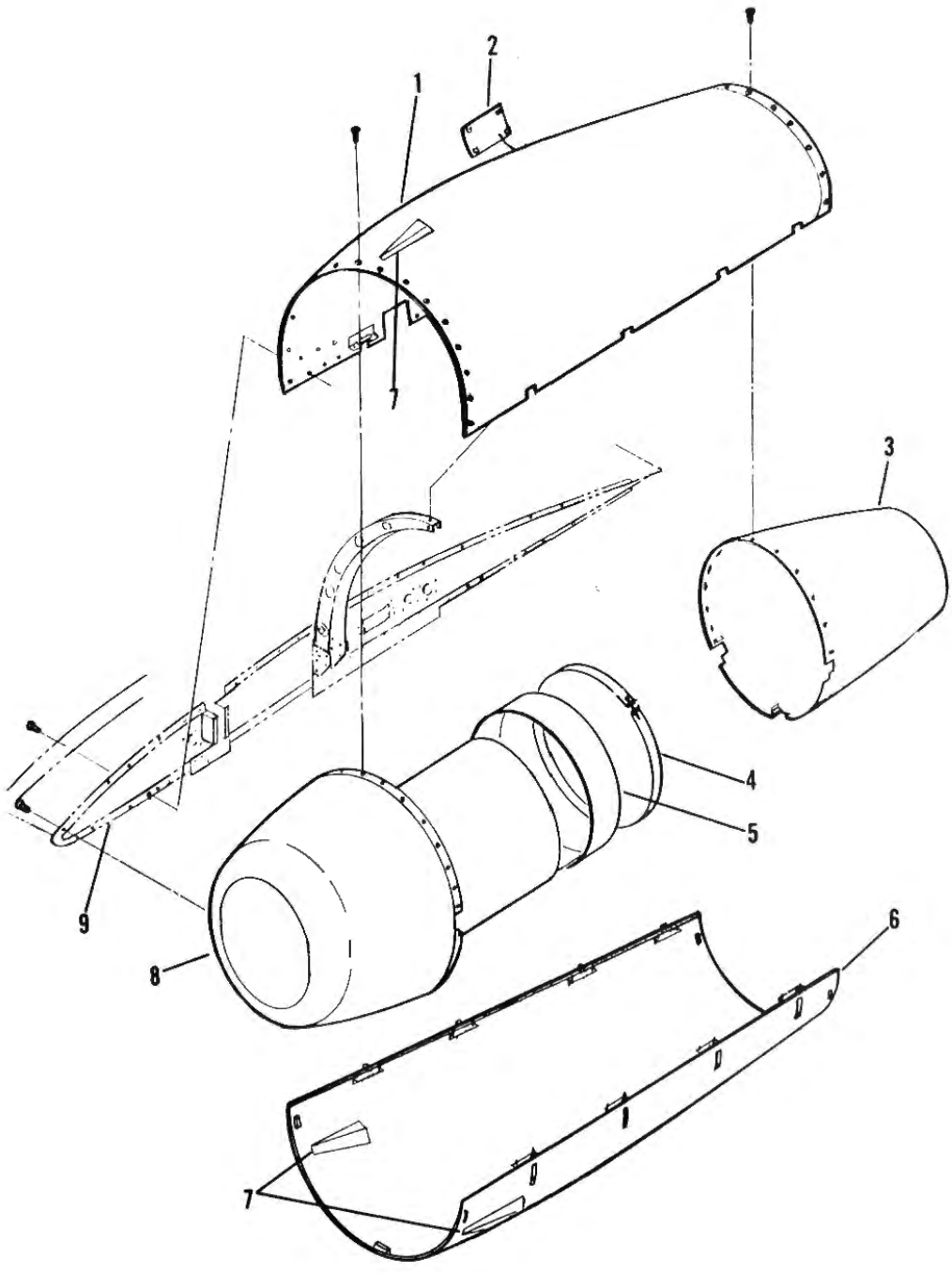

1. Upper Nacelle
2. Oil Filler Access Panel
3. Rear Nacelle
4. Retainer Clamp
5. Seal
6. Lower Nacelle
7. Air Scoop
8. Nose Cap
9. Pylon

Figure 5-7. Nacelle Installation (Typical)

REMOVAL AND INSTALLATION OF CONTROL UNIT. Remove the control unit by disconnecting electrical plug and removing attaching parts and control unit from aircraft. Install in reverse order of removal.

ENGINE ICE DETECTION SYSTEM. The ice detection system includes a detector, an interpreter, and a warning light. The detector is mounted in the left air inlet duct and the interpreter is mounted on a bracket just forward of the starter-generator. The warning light (INLET ICE or ICE DETECT) is mounted in the readout panel. The system is protected by a 10-ampere circuit breaker.

a. Operation. Use of a pressure differential for mechanical power allows a three-phase cycling operation: neutral, sensing, and de-icing. When the detector probe is subjected to ram air of 40 knots or more, a pressure differential is created which expands the detector diaphragm, actuating the diaphragm switch. This moves the system to the sensing phase by energizing the interpreter arming relay and directing current to the blade of the diaphragm switch. When the probe perforations become blocked with ice, the resulting pressure differential allows the diaphragm to relax and return to its normal position. This moves the system to the de-icing phase by energizing the interpreter power relay which lights the warning light (INLET ICE or ICE DETECT) and energizes the probe heater. When the ice is melted from the probe, the pressure differential is restored and the system reverts to the sensing phase. It will cycle between the sensing and de-icing phases until icing conditions abate. The system is completely automatic and non-adjustable. In case of malfunction, replace the defective component.

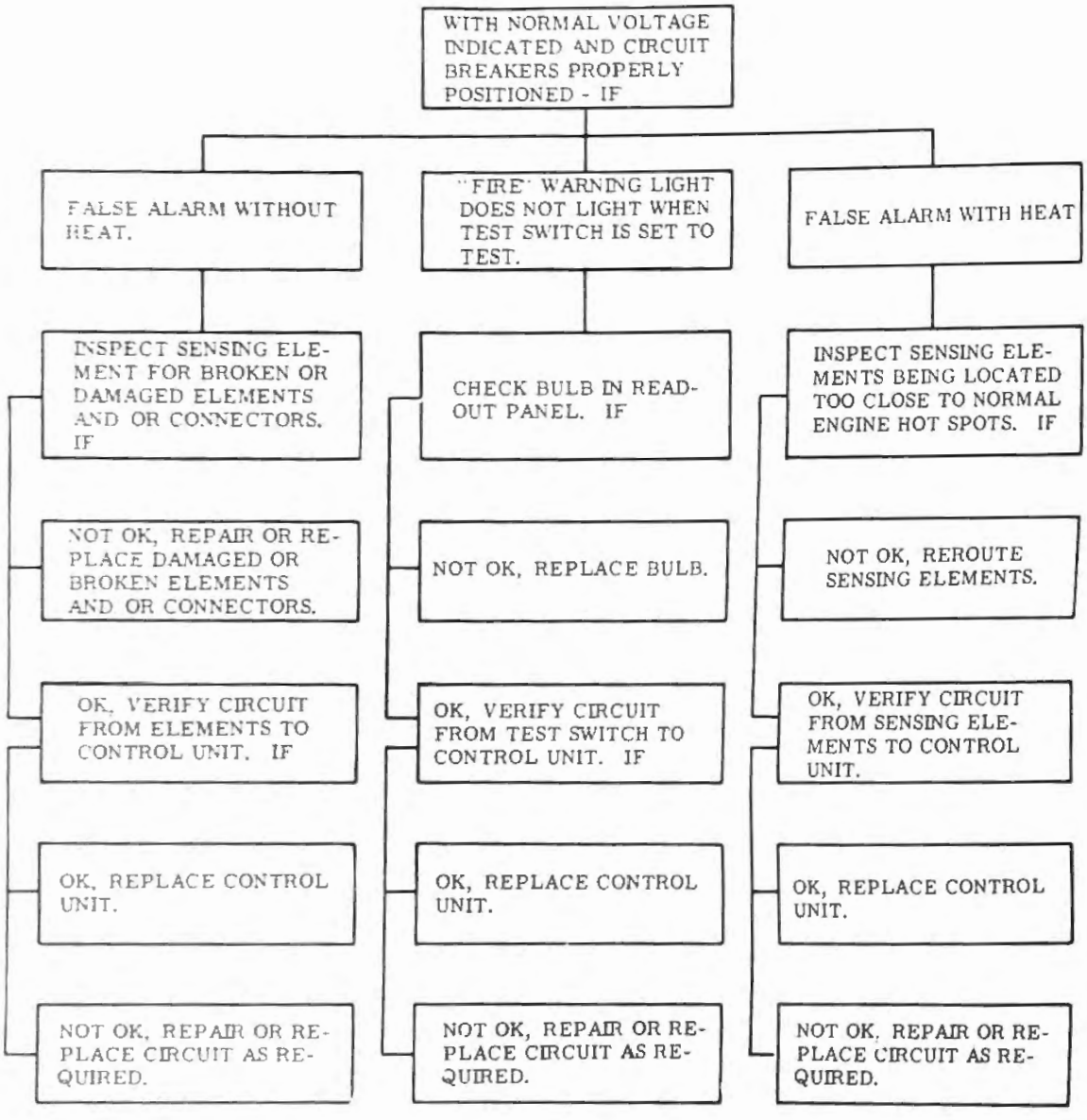

Figure 5-8. Fire Detection System Trouble Shooting

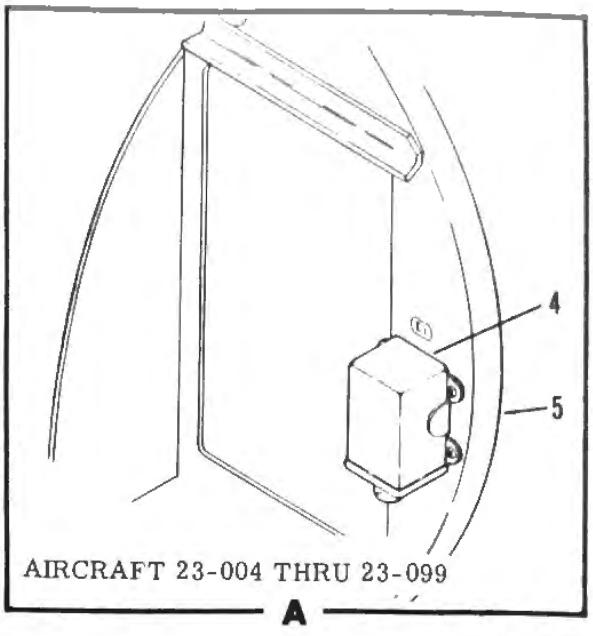

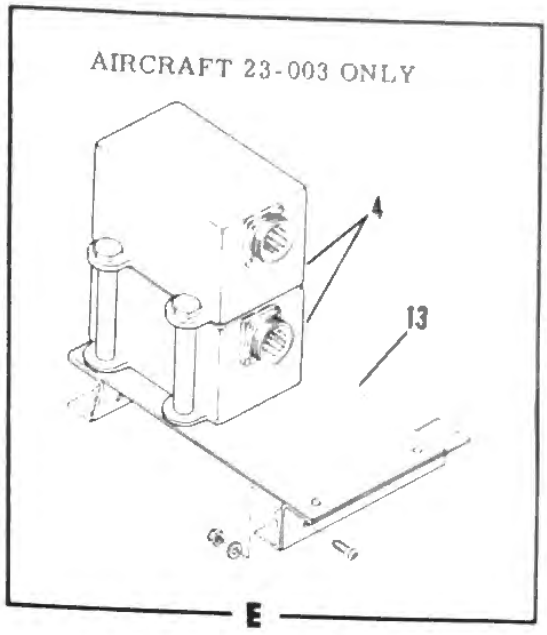

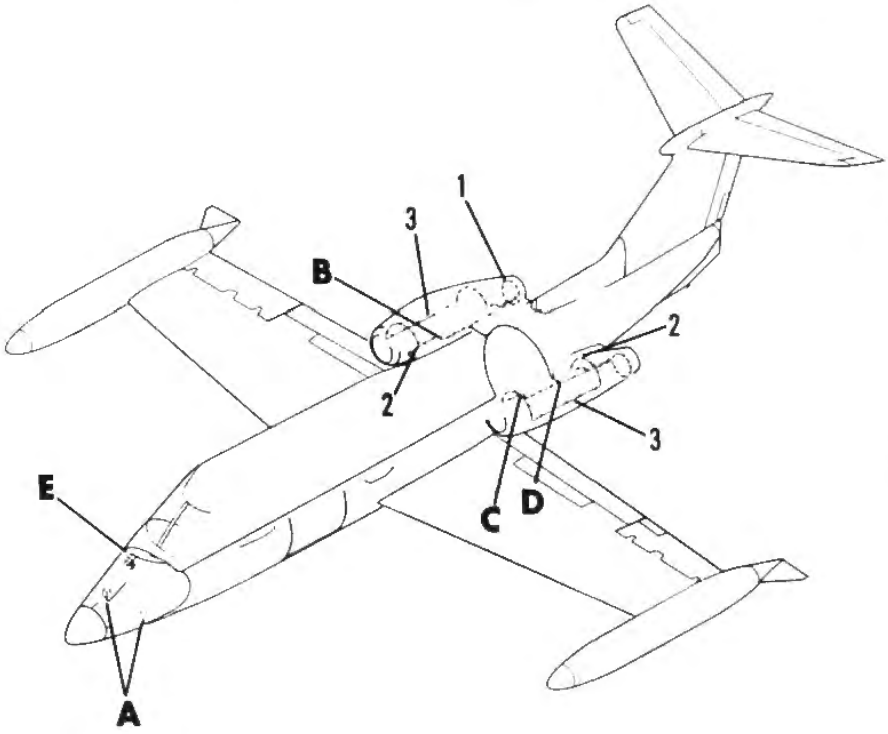

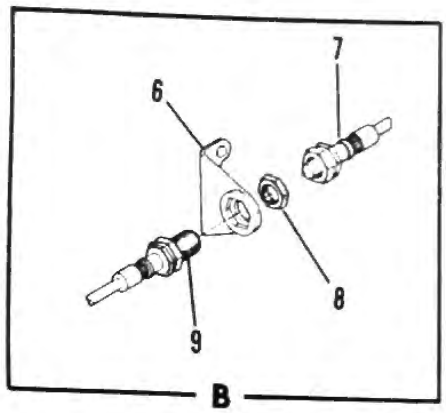

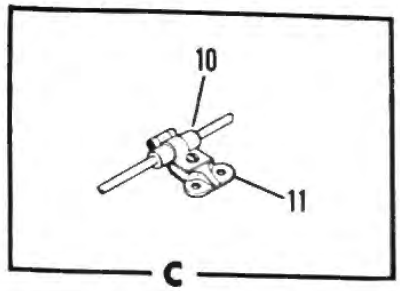

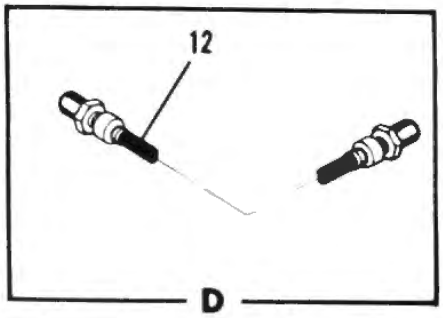

1. Element - Rear Nacelle
2. Element - Inboard
3. Element - Outboard
4. Control Units - Fire Detection
5. Frame 2
6. Bracket - Connector Joint
7. Socket
8. Nut
9. Plug
10. Grommet
11. Hinge Clamp
12. Flexible Lead
13. Mounting Plate

Figure 5-9. Fire Detection System Installation

ENGINE ICE DETECTION SYSTEM - FUNCTIONAL CHECK.

a. Set battery switch to ON.

b. With an air source of approximately 100 psi and holding hose 18 to 24 inches from ice detection probe, direct air across probe.

c. Cover perforations in probe with finger. The ICE DETECT warning light on the readout panel should light and probe should heat.

CAUTION

The probe heater is energized when the ice detect light is lighted. To prevent possible damage to the ice detector, the system should be reset as soon as possible.

d. Reset system by directing air across probe. The warning light will go out and probe will cool.

e. Set battery switch to OFF.

ENGINE ANTI-ICING SYSTEM. (Refer to Section IX for wiring diagram.) Anti-ice of engine areas is accomplished using engine bleed air. System components for each engine are an anti-icing control valve, an anti-ice pressure switch, two engine ice indicator lights, and the NACELLE HEAT control switches.

a. Operation. When the ice detection system indicates icing conditions, the NACELLE HEAT switches on the switch panel should be set to ON. This grounds 28-volt DC from the starter generator through the applicable anti-ice relay coil and also applies power to the anti-icing pressure switch. When the anti-ice relay is energized, 28-volt DC power from the starter-generator energizes the nacelle de-ice heater and deenergizes the anti-icing valve.

Note

Under normal no-ice conditions, the anti-icing valves are electrically energized and held to the closed position. When anti-icing is required, the valves are deenergized (opened); therefore, with a complete electrical power failure, engine anti-ice is still available.

With the anti-ice valves open (deenergized), bleed air from the compressor section is directed to the front frame manifold and radially inward to the engine forward frame struts, inlet guide vanes, and inlet bullet nose cone. A drop in anti-ice duct pressure is sensed by the pressure switch which energizes the warning light (ANTI-ICE or ENG ICE) on the readout panel to indicate a malfunction in the anti-ice system.

ENGINE NACELLE ANTI-ICING SYSTEM. (Refer to Section IX for wiring diagram.) (Effective aircraft with fiberglas nacelle inlet.) The nacelle anti-icing system consists of the NACELLE HEAT switches, the heating elements imbedded in the fiberglas portion of the engine inlets, a temperature overheat switch in each nacelle inlet, four anti-ice relays, and the warning light (INLET TEMP or INLET O'HEAT) on the readout panel.

a. Operation. Setting a NACELLE HEAT switch to ON allows power from the starter generator to energize the applicable inlet heater via the anti-ice relay. If the inlet temperature rises above 190° (±3°) F, the temperature switch will energize the warning light (INLET TEMP or INLET O'HEAT) on the readout panel. The NACELLE HEAT switch should then be set to OFF. The system is protected by two circuit breakers.

ENGINE NACELLE ANTI-ICING SYSTEM. (Refer to Section IX for wiring diagram.) (Effective aircraft with aluminum nacelle inlet.) The nacelle anti-icing system consists of two nacelle heat switches, heating elements bonded to the forward portion of the engine inlets, a temperature overheat switch in each nacelle inlet, two anti-ice relays, and the warning light (INLET TEMP or INLET O'HEAT) on the readout panel.

a. Operation. Setting a NACELLE HEAT switch to ON allows power from the starter generator to energize the applicable inlet heater via the anti-ice relay. If the inlet temperature rises above 190° (±3) F, the temperature switch will energize the warning light (INLET TEMP or INLET O'HEAT) on the readout panel. The NACELLE HEAT switch should then be set to OFF. The system is protected by two circuit breakers.

ENGINE NACELLE ANTI-ICING RESISTANCE CHECK. (Aircraft with aluminum nacelle inlets.) (See figure 5-9A.) The nacelle anti-ice heating elements should be checked for serviceability in accordance with current inspection requirements, Section VIII. Perform resistance check using a certified Wheatstone Bridge tester, low resistance test leads, and a thermometer with an accuracy of ±1°F. The nacelle anti-ice heating elements are checked for resistance as follows:

a. Remove tailcone access door.

b. Disconnect both aircraft batteries.

c. Remove left engine lower nacelle.

d. Disconnect six wires numbered 1, 2, and 3 from terminal posts.

e. Zero the Wheatstone Bridge Tester by following the manufacturer's instructions shown on the lid of the tester.

f. Connect test leads to posts of the tester, measure the resistance, and record on a form similar to figure 5-9A.

g. Measure the resistance of each of the three heating element circuits and the three heating element circuits connected in parallel. Record the resistance values on form in figure 5-9A.

CAUTION

Good contact must be obtained between test leads and the circuits tested. Poor contact may result in an increased resistance of a serviceable heating element above the allowable limits.

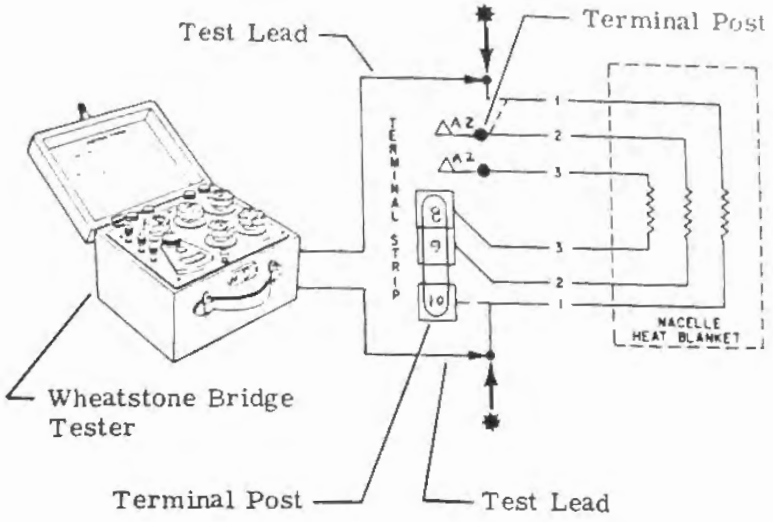

✱ Disconnect wire terminals from terminal posts before performing resistance check.

NACELLE ANTI-ICE CIRCUIT TEST SETUP

EXAMPLE: Circuit No. 1
Temperature 80° F
Resistance of Meter Test Leads .135 ohms
Resistance Read .950 ohms
Compute for corrected value.

Circuit	Required Value (Ohms)	Recorded Value (Ohms)	Corrected Value (Ohms)
Circuit No. 1	0.836 ±5% (0.7942 to 0.8778 at 75°F)	Resistance Read .950 -Meter Test Leads -.135 Actual Resistance .815	.807

Operation: Subtract meter test leads (.135) from resistance read (.950). The result is the actual resistance (.815).

Correct for temperature (80° F) by subtracting 1% of actual resistance (.815). The result is the corrected value (.807).

Conclusion: The corrected value (.807) ohms is within the required value. Circuit No. 1 is ok.

Figure 5-9A. Nacelle Anti-Icing System (Sheet 1 of 2)

Circuit	Required Value (Ohms)	Recorded Value (Ohms)	Corrected Value (Ohms)
Circuit No. 1	0.836 ±10% (0.7524 to 0.9196 at 75° F)	Resistance Read_____ - Meter Test Leads_____ Actual Resistance_____	
Circuit No. 2	0.795 ±10% (0.7155 to 0.8745 at 75° F)	Resistance Read_____ - Meter Test Leads_____ Actual Resistance_____	
Circuit No. 3	0.891 ±10% (0.8019 to 0.9801 at 75° F)	Resistance Read_____ - Meter Test Leads_____ Actual Resistance_____	
Total (Circuits 1, 2 & 3 in Parallel)	0.27961 ±10% (0.251649 to 0.307571 at 75° F)	Resistance Read_____ - Meter Test Leads_____ Actual Resistance_____	

Figure 5-9A. Nacelle Anti-Icing System (Sheet 2 of 2)

h. Determine the temperature in degrees Farenheit by using a thermometer.

i. Correct for temperature variation by taking the actual resistance value and subtract 1% for every 5° above 75°F or add 1% for every 5° below 75°F. If the temperature is above 80°F or below 70°F, corrections for temperature variation must be made. Record the corrected value in figure 5-9A.

j. Compare the actual resistance values with the corrected values for circuits 1, 2, and 3 and total circuits 1, 2, and 3 in parallel. The nacelle anti-ice heating elements are serviceable if: the corrected resistance values for all three circuits fall within the specified tolerances; or the corrected resistance value for the three circuits checked in parallel fall within the specified tolerances; or the four corrected values fall within the specified tolerances.

k. Connect the six terminal wires to the terminal posts per Section IX of this manual.

l. Install lower engine nacelle.

m. Repeat steps a. through l. for the right engine.

n. Connect aircraft batteries.

o. Install tailcone access door.

ENGINE LUBRICATION SYSTEM.

a. The engine has a pressurized closed-circuit lube system designed to furnish oil to parts which require lubrication during engine operation. After oil has been supplied to these parts it flows to the sumps; here it is recovered and recirculated throughout the system. The main components of the lube system are located beneath the compressor section. They include a lube and scavenge pump, mounted on the right rear pad of the accessory gearbox; an oil tank, secured to the lube and scavenge pump; an oil cooler, mounted on the oil tank; an oil filter, contained within the lube and scavenge pump casting; a scavenge oil temperature tap, located at the gearbox on the left scavenge tube; and an oil pressure transmitter.

b. The pressure element of the lube pump pumps oil from the tank, through the oil cooler, through the oil filter, and into the accessory gearbox. Part of the oil services the gearbox; the remainder flows through the gearbox to two OUT ports on the left side of the gearbox. Oil flows from the one OUT port through an external line to the No. 1 bearing. It flows from the second OUT port through an external line which is branched to service the transfer gearbox. The main line connects to the main frame. This line services, through internal tubing, the internal bearings, seals, and gears of the engine. The five scavenge elements of the lube and scavenge pump pick up the oil which collects in the engine sumps and returns it to the oil tank.

c. A closed vent circuit provides for pressurization of all parts of the lube system including the oil tank, sumps, and gearboxes. This ensures pressurization to the inlets of the pump service element and scaveenge elements. The sumps are pressurized by seal leakage air that enters the sumps. Vent lines and check valves between the engine sumps, gearboxes, and oil tank maintain a balanced pressure between the sumps, gearboxes, and oil tank. These vent lines and check valves also prevent overpressurization of the sumps by venting air (in excess of what the scavenge elements can handle) directly to the oil tank. A pressure relief valve in the tank overboard vent line controls the pressure in the entire system by venting overboard any air in excess of 2.5 (±0.5) psig. A small orifice through the center of this valve provides system depressurization at engine shutdown.

FUEL SYSTEM. (See figure 5-10.) Total fuel capacity of approximately [A] 828 gallons ([B] 841 gallons or [C] 853 gallons) is stored in the integral wing tanks, the tip tanks, and the fuselage tank. Two electrically operated centrifugal-type low-pressure boost pumps are installed at the most inboard portion of each wing fuel tank. The wing dihedral of 2.5° causes this area to be the lowest point of the tanks and assures that the boost pumps will be submerged in fuel until the tanks are practically empty. A boost pump, located in each tip tank, transfers fuel from the tank to that respective wing tank. Five pressure switches are located throughout the fuel system to indicate transfer of fuel has been completed or boost pump failure. Motorized fuel shutoff valves are installed throughout the fuel system. The valves are located as illustrated in figure 5-15. Seven water drain valves are located at low points in the fuel system to drain any accumulation of water or sediment.

a. Operation. During normal operation, the LEFT ENGINE MAIN, LEFT ENGINE STANDBY, RIGHT ENGINE MAIN and RIGHT ENGINE STANDBY switches are set to ON. The FUS TANK TRANSFER switch is set to OFF until aircraft is below maximum landing weight of 11,880 pounds then it is set to ON until the tank is empty then set to OFF. On [E] the Standby Pump switches must be set to OFF until fuselage tank fuel transfer is completed. The L TIP TRANSFER and R TIP TRANSFER switches are set to OFF until tip tanks have gravity fed down to approximately 600 pounds each, then set to ON until the tip tanks are empty. Some of the wing fuel will bleed back into the empty tip tanks and will periodically have to pumped back into the wing. With applicable switches set to ON the tip tank and fuselage tank fuel is being transferred into the wing tanks and wing tank fuel is being pumped to the engines. The FUEL CROSSFLOW switch is set to ON during single engine operation or if a fuel unbalance occurs. Should a boost pump fail, or when the applicable tank is empty, a drop in fuel pressure will cause a pressure switch to energize the related indicator light on the readout panel. The applicable boost pump should then be turned off.

FUEL SYSTEM SERVICING. Refer to Section I for fuel servicing instructions.

WING FUEL TANKS. The full span, integral wing tanks comprise a large portion of each wing. The inboard end of the tank is at the aircraft centerline and the outboard end is at wing station 181.10. The forward side of the tank ends at wing spar No. 1 and the aft side terminates at wing spar No. 7. Fuel is not stored in the main landing gear wheel well and wing leading edge areas. The tanks are sealed by applying a faying surface seal between the wing skins and all adjacent structure. A bead of sealant is then applied around the entire inside perimeter of the skins as added insurance against fuel tank leakage. Each wing tank incorporates two fuel boost pumps (main and standby). Twenty-two flapper type check valves are located in the wing ribs. The flapper valves allow free fuel flow inboard but restrict outboard fuel flow. The wing tanks are vented to the tip tanks which are vented overboard to avoid pressure buildup. Compartment-to-compartment vents are also installed in the wing ribs. Fuel flow between the wing tanks is controlled by a motorized shutoff valve installed in the crossflow fuel line.

TIP TANKS. The wing tip tanks, constructed of aluminum alloy, have a capacity of [D] 178 gallons ([C] 184 gallons) each. Baffles are installed to minimize slosh and adverse fuel effects on the aircraft center of gravity during extreme flight attitudes. A fuel boost pump, installed in each tip tank, transfers fuel into the wing tanks. Fuel can also gravity flow through the flapper check valves into the wing tanks. However, any fuel at a lower level than the check valves must be transferred utilizing the boost pumps. A filler cap, located in each tip tank, is used to service the entire aircraft fuel system. Each tank is connected to a common vent line with the fuselage auxiliary tanks and then vented overboard. The tip tank is secured to the wing spars with two bolts and to the wing tip with countersunk screws.

TIP TANK MAINTENANCE AND REPAIR. The following tip tank removal and installation procedure applies to removing the tip tanks for repairs and reinstallation. This procedure does not include the installation of a new tip tank because it requires the locating and fitting of the tip tank to the wing. If a new tip tank is to be installed, install in accordance with Airplane Modification Kit No. AMK71-9.

TIP TANK REMOVAL. (See figure 5-11.)

Note

Prior to tip tank removal, defuel the applicable wing and tip tank. Also assure that the fuel crossflow valve is closed.

a. Support the tip tank on a movable dolly.
b. Remove the three lower outboard wing access panels.
c. Remove attaching strap and screws from wing.
d. Remove the two flapper valve assemblies from the tip tank interconnect lines.
e. Remove clamps securing the tip tank fuel interconnect lines and the tip tank vent line boot seals.
f. Loosen tip tank interconnect line boots.

Note

The boot seals are sealed to the tip tank interconnect lines and upon loosening, damage will occur; therefore, new boot seals must be installed.

[A] Aircraft 23-003 thru 23-014.
[B] Aircraft 23-015 thru 23-051 except aircraft modified by SK23-136.
[C] Aircraft 23-052 thru 23-099 and aircraft modified by SK23-136.
[D] Aircraft 23-003 thru 23-051 except aircraft modified by SK23-136.
[E] Aircraft 23-070 and Subsequent

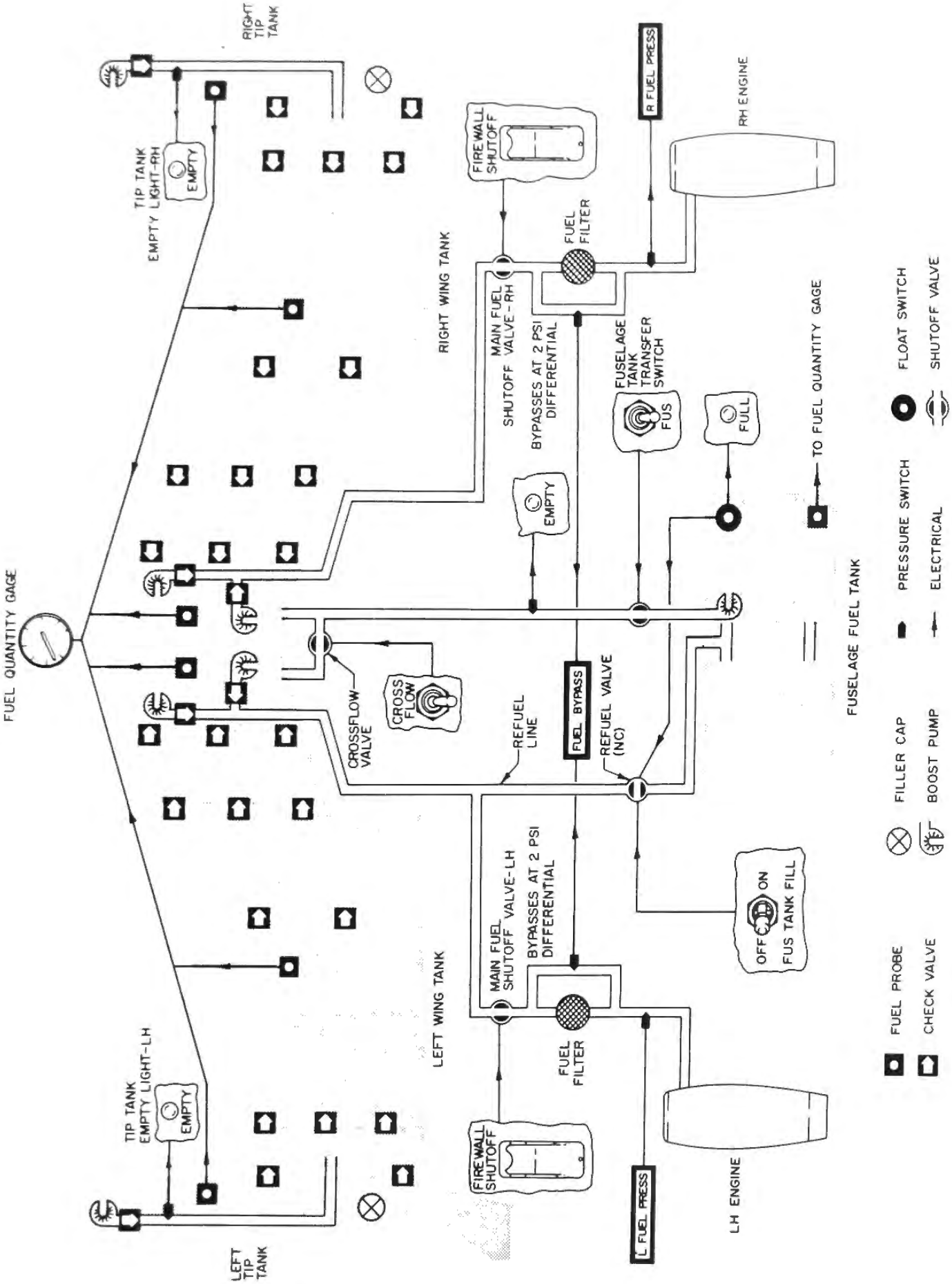

A Figure 5-10. Fuel System Schematic (Sheet 1 of 3)

A Aircraft 23-003 thru 23-049

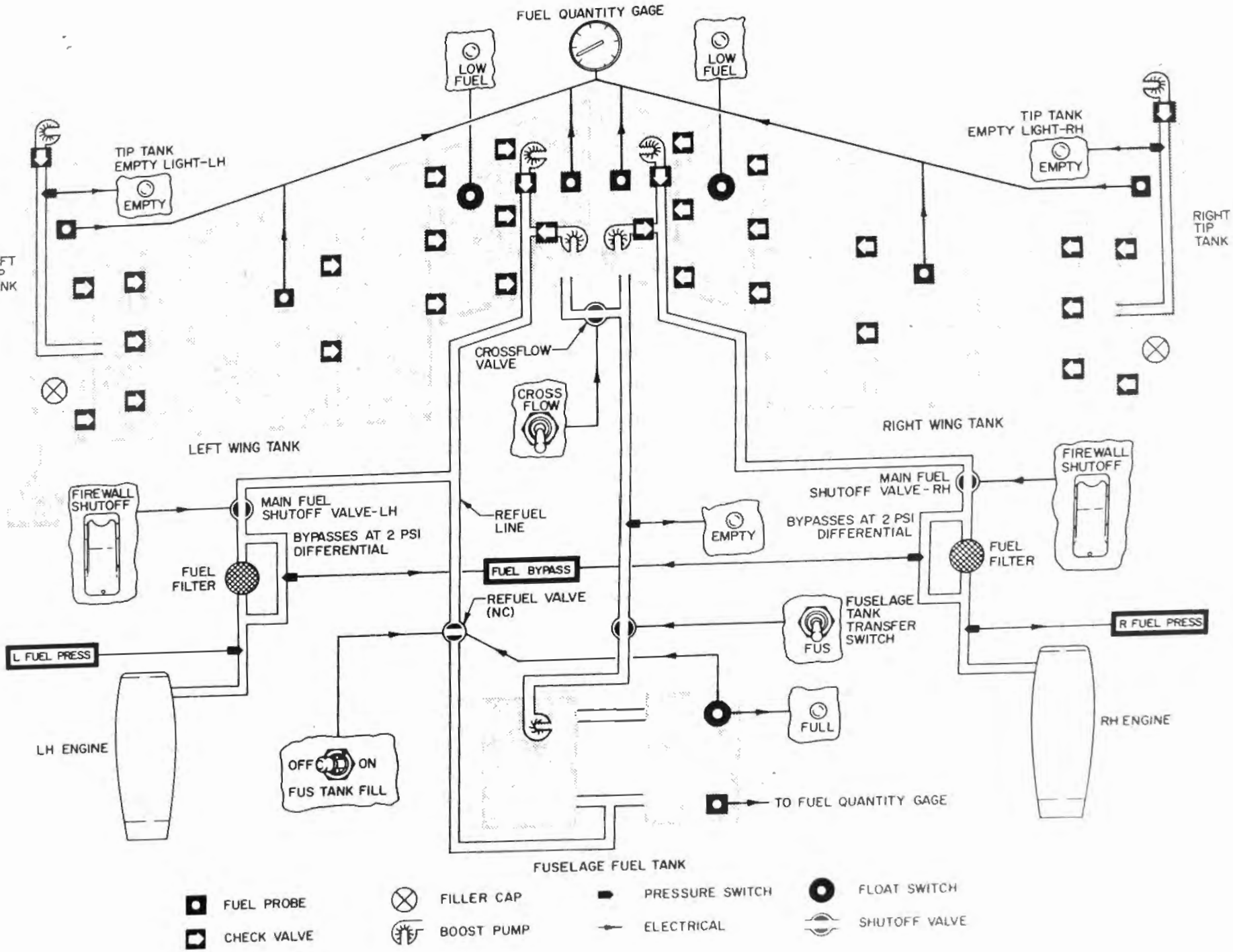

Figure 5-10. Fuel System Schematic (Sheet 2 of 3)

Aircraft 23-050 thru 23-069

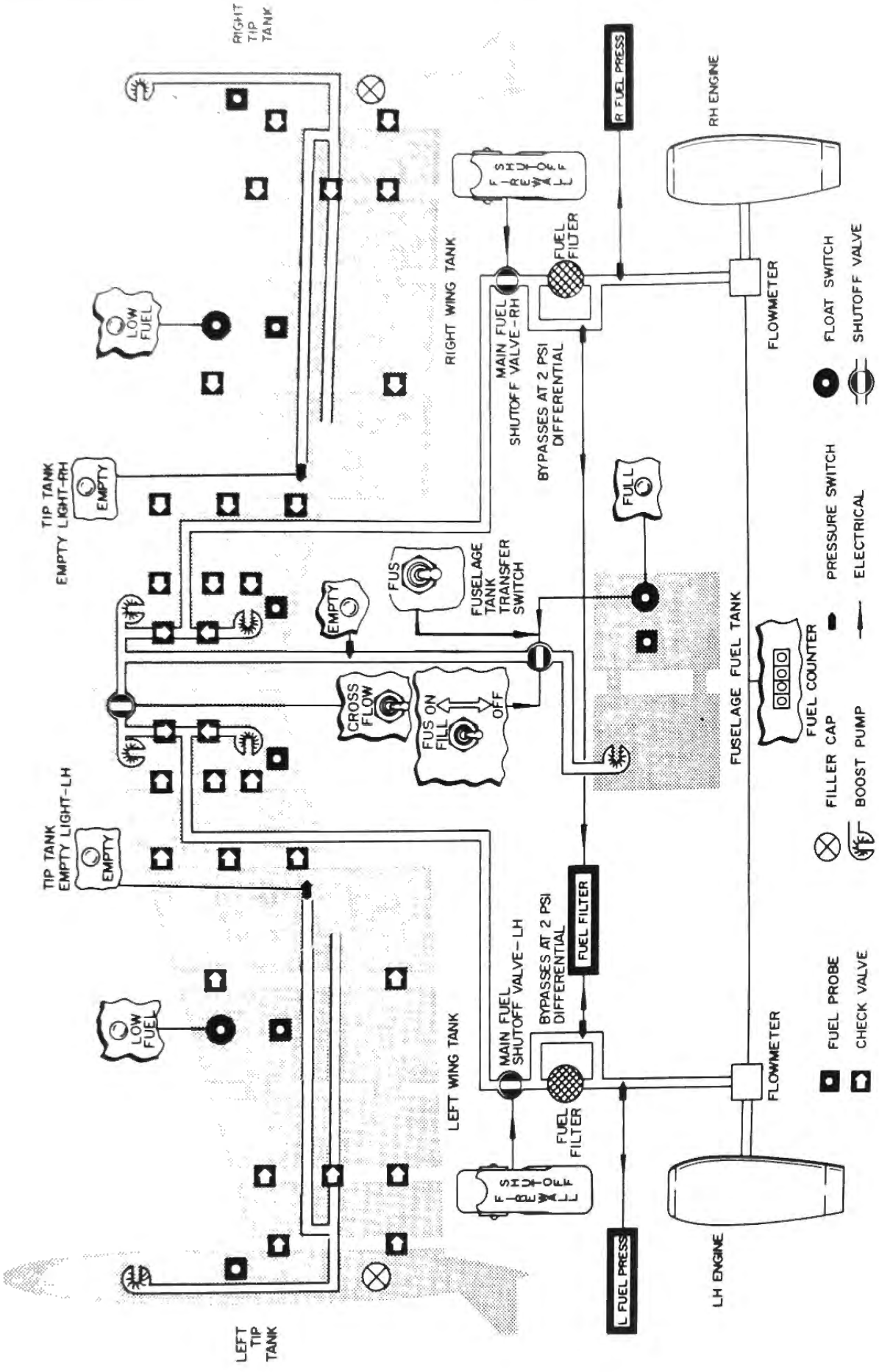

C Figure 5-10. Fuel System Schematic (Sheet 3 of 3)

C Aircraft 23-070 thru 23-099

g. Remove tailcone, junction box access cover, fuel boost pump access cover, fuselage fuel probe access cover and, where applicable, the nose cone from the tip tank.
h. Disconnect all wiring from the applicable equipment and pull the wiring from the tip tank through the aft access hole of the wing.
i. Disconnect the fuel vent line.
j. Remove attaching bolts and the tip tank from the aircraft.
k. Remove retainer rings and boot seals from wing rib. Discard old boot seals.

TIP TANK INSTALLATION. (See figure 5-11.)
a. Install new boot seals with retainer rings. Torque bolts to 10 inch-pounds.
b. Apply bead of sealant around interconnect tubes.
c. Position tip tank on wing and install washers with forward and aft attachment bolts.
d. Install clamps and flapper valve assemblies on interconnect tube. Torque clamps to 25 inch-pounds and connect fuel lines.
e. Install upper and lower access straps with screws.
f. Connect wiring to electrical components in accordance with applicable wiring diagram in Section IX.
g. Perform operation check of electrical system.
h. Apply sealant, in accordance with Section II, and install access panel.
i. Fuel the aircraft and inspect for leakage.
j. Calibrate the directisyn flux valve, in accordance with Section VI, and install tailcone.

FUSELAGE FUEL TANK. (See figure 5-12.) The fuselage fuel tank consists of two bladder-type cells located in the cavity between frames 22 and 24. Total capacity of the two cells is [A] 112 gallons ([B] 125 gallons). The two cells are interconnected to form one tank. A float switch, fuel boost pump, fuel probe, and a vent are installed in the tank. Refueling of the fuselage fuel tank is accomplished by pumping fuel from the wing tank through a refuel line to the cells. A motorized fuel shutoff valve, located in the refuel line, shuts off fuel flow to the cells when the float switch is activated (tank full position). Additional functions of the float switch, in the tank full position, are to deenergize the wing standby boost pump and turn on the TANK FULL indicator light. A pressure switch, located in the fuselage tank transfer line, senses the pressure drop when the tank is empty and energizes the FUS EMPTY light on the fuel control panel.

FUSELAGE FUEL TANK BLADDER REMOVAL. (See figure 5-12.)
a. Assure that fuel tank is empty.
b. Remove fuel cell access covers from aft side of frame 24.
c. Remove float switch from RH cell.
d. Remove fuel probe.
e. Remove fuel pump.
f. Remove clamps attaching refuel nipples to refuel tubes on bottom of fuel cell bladder. Disconnect nipples from refuel tubes.
g. Inside LH bladder, remove clamps attaching the bladder to the crossover tubes. Disconnect bladder from crossover tubes.
h. Unlace both bladders from fuel cell structure.
i. Cover access hole edges with masking tape to avoid damaging bladder when removing it from structure.
j. Remove LH bladder through large access opening in aft side of frame 24.
k. Push crossover tubes through structural cell divider and remove RH bladder with crossover tubes attached.

FUSELAGE FUEL TANK BLADDER INSTALLATION. (See figure 5-12.)
a. Clean fuel cell cavities of all burrs and foreign matter and assure that all rivet heads in cavities are sealed.
b. Check that fuel cavity drain holes are unobstructed.
c. Prepare RH bladder for installation as follows:
1. Insert three crossover tubes into bladder until they are flush inside, then secure crossover tubes with clamps.

Note

If necessary, use a very thin coat of Simonize wax as crossover tube lubricant.

d. Assure that approximately 16 feet of nylon lacing cord is available for lacing each cell into the tank structure.
e. Cover access hole edges with masking tape to avoid possible damage of bladders during installation.
f. Insert RH bladder (bottom end first) through large access hole in aft side of frame 24. Position bladder in cavity.
g. Burn both ends of each nylon lacing cord to avoid unraveling and tie a knot in one end of each cord.
h. Insert LH bladder (bottom end first) through large access hole in aft side of frame 24. Position bladder in cavity.
i. Lace both fuel cell bladders into fuel cell cavities as shown.

Note

Leave a small amount of space between top of bladders and cell structure.

j. Insert crossover tubes from RH bladder through structural cell divider into LH bladder.
k. When crossover tubes are flush with inside of LH bladder, secure tubes with clamps.
l. Position refuel nipples through holes in structure and secure to refuel tubes with clamps.
m. Position float switch in RH bladder with the word TOP up, insert through bladder and fuel cell structure, and secure with lockwasher and nut. Connect electrical wiring to float switch.
n. Install fuel probe.
o. Install fuel pump.
p. Install access panels on aft side of frame 24 as follows:

[A] Aircraft 23-003 thru 23-014.
[B] Aircraft 23-015 thru 23-099.

1. Tailcone
2. Fuel Probe
3. Nose Cone (Where Applicable)
4. Access Cover (Fuel Drain)
5. Screw
6. Access Cover (Wing)
7. Gasket
8. Strap
9. Access Cover (Tip Tank)
10. Gasket
11. Filler Cap
12. Electrical Conduit
13. Vent Line
14. Washer
15. Bolt
16. Fuel Pump Discharge Line
17. Fuel Vent Interconnect Line
18. Retaining Ring
19. Boot Seal
20. Wing Rib
21. Clamp
22. Flapper Valve
23. Adapter

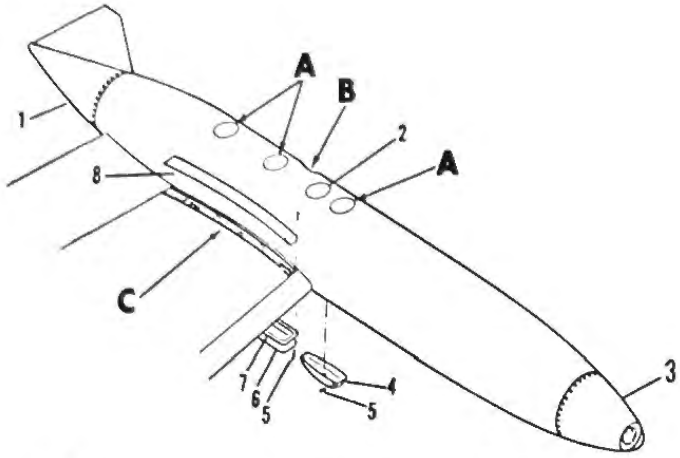

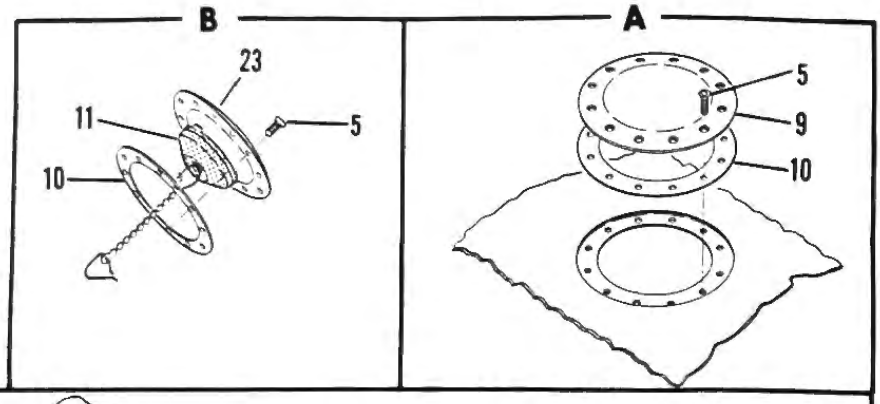

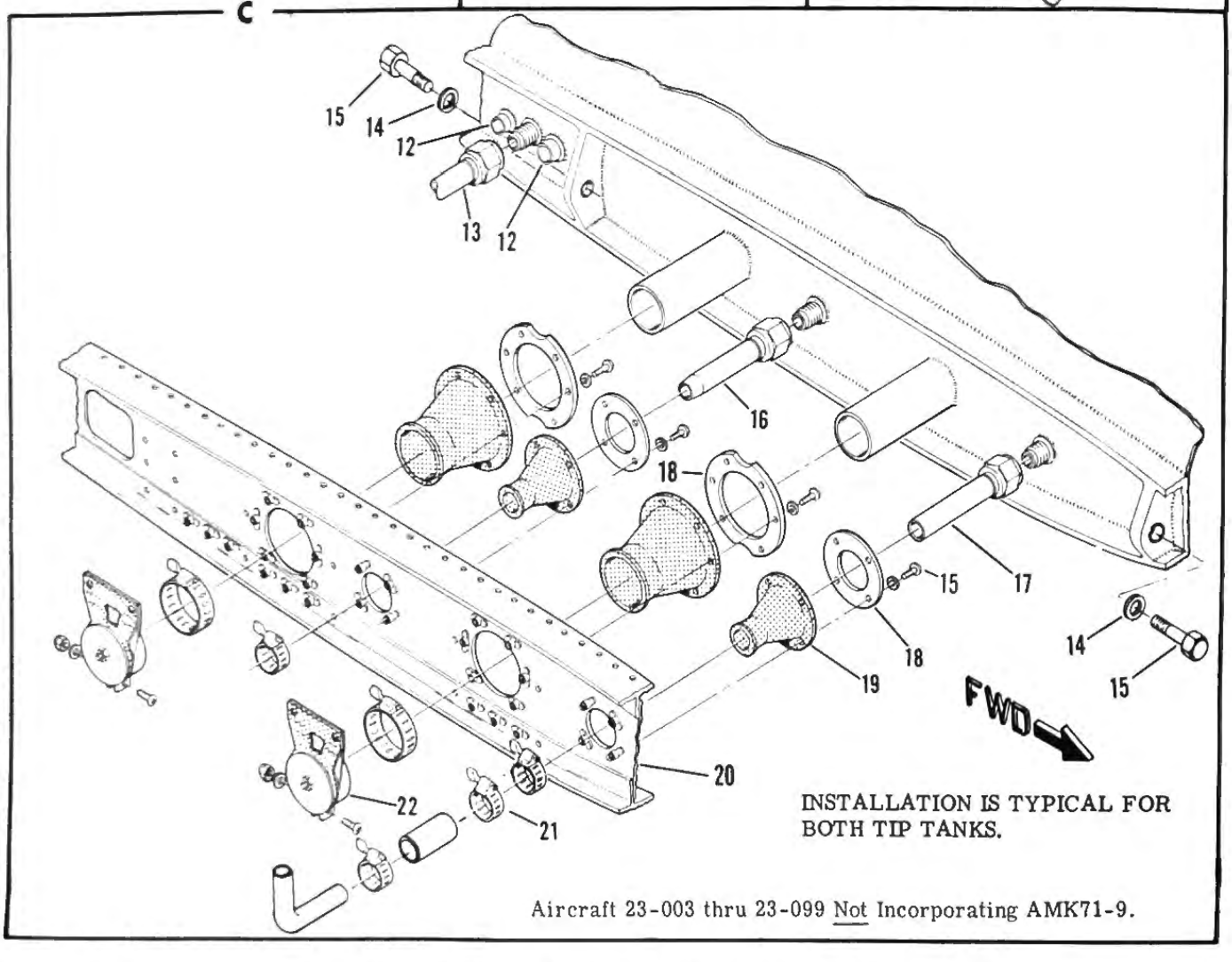

Figure 5-11. Tip Tank Installation (Sheet 1 of 2)

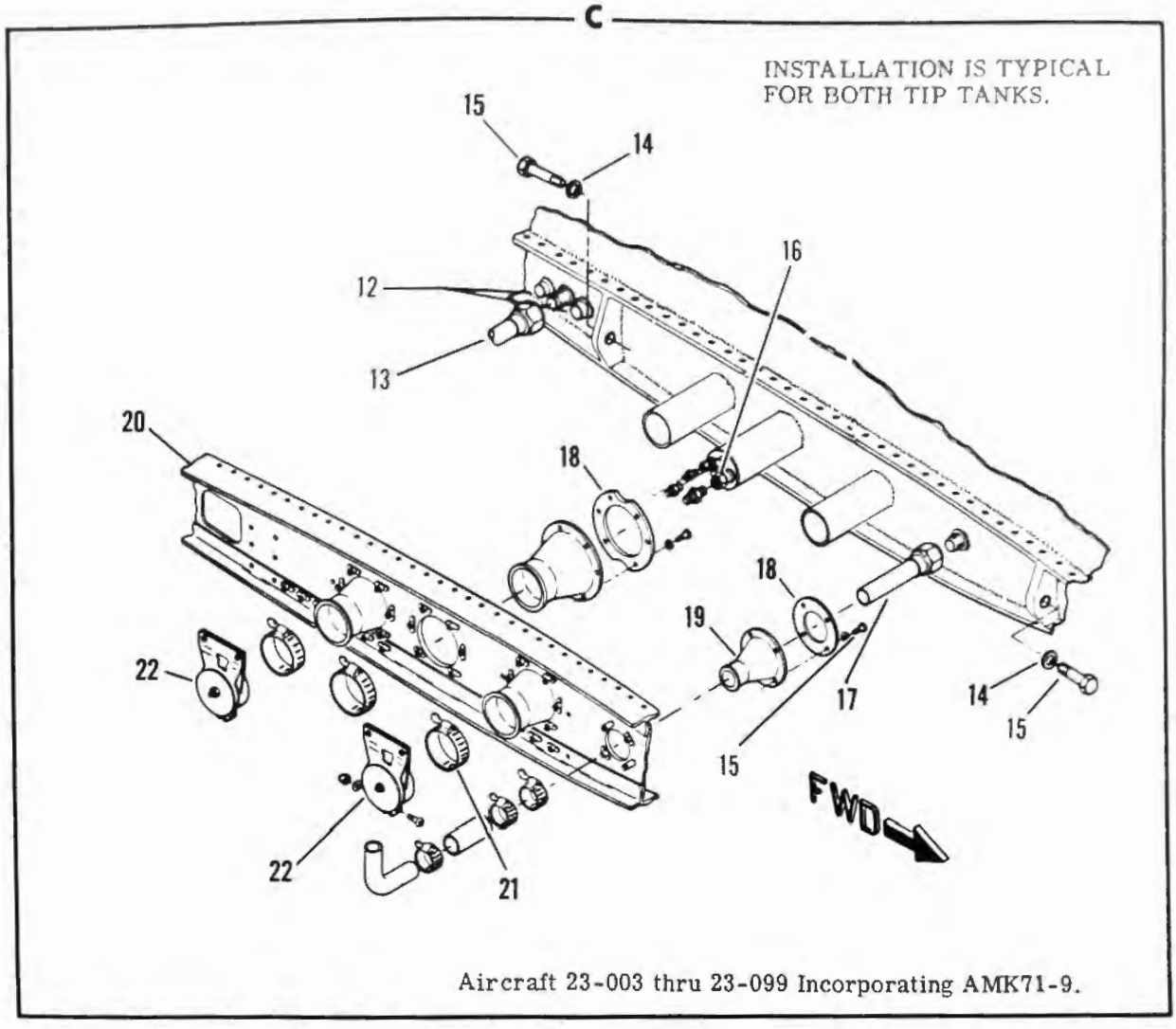

Figure 5-11. Tip Tank Installation (Sheet 2 of 2)

1. Fabricate three alignment pins by cutting off the heads of three 1/4 x 3 inch bolts.
2. Install alignment pins into three bolt holes equally spaced around perimeter of one fuel cell bladder access hole.
3. Install a gasket on alignment pins and insert pins through tank structure.
4. Install a gasket and access cover on aft side of tank structure. Install bolts securing access cover to fuel cell bladder and torque to 50 (±5) inch-pounds. Safety wire bolts.

Note

Do not torque any bolts until all bolts have been installed finger-tight.

5. Repeat steps 1 through 4 above on remaining three access covers.

FUEL BOOST PUMPS. Seven fuel boost pumps are installed in the aircraft fuel system; two in each wing tank (main and standby), one in each tip tank, and one in the fuselage tank. All seven boost pumps are identical except the fuselage pump does not incorporate a check valve in the pump outlet. The submerged-type fuel pumps have a maximum output of 18 psi. The pumps, powered by 28-volt DC, are controlled by individual switches on the pilot's switch panel.

FUEL BOOST PUMP REMOVAL AND INSTALLATION. Fuel boost pump removal and installation should be performed as shown in the exploded view sequence of figure 5-12, 5-13, 5-14.

Note

When replacing fuselage tank boost pump, torque pump attachment bolts to 50 (±5) inch-pounds.

MOTORIZED FUEL SHUTOFF VALVES. (See figure 5-15.) Five (A four) motorized fuel shutoff valves are installed in the aircraft fuel system. The two-position (open or closed) ball-and-seat type valves are electrically operated by 28-volt DC.

a. The left engine main fuel shutoff valve controls fuel flow to the left engine and is closed only in case of fire in the left engine. Operation is controlled by a cover-guarded L ENG FIRE switch, located on the pilot's sub-panel.

b. The right engine main fuel shutoff valve controls fuel flow to the right engine and is closed only in case of fire in the right engine. Operation is controlled by a cover-guarded R ENG FIRE switch, located on the pilot's sub-panel.

c. B The fuselage tank refuel valve is located in the refuel line from the LH wing tank to the fuselage tank. The valve is closed when the FUS TANK FILL switch on the switch panel is set to OFF or when the fuselage tank float switch senses a full tank condition.

d. B The fuselage fuel tank transfer valve is located in the fuel line from the fuselage tank to the RH wing tank. Operation is controlled by the FUS TANK TRANSFER switch on the switch panel.

e. A The fuselage transfer and refuel valve is located in the fuel line leading from the fuselage fuel tank to the RH wing tank. The valve (normally closed) is controlled by the FUS FILL and FUS switches.

f. The fuel crossflow shutoff valve controls gravity fuel flow between the wing tanks. Operation is controlled by the FUEL CROSSFLOW switch on the switch panel. The crossflow shutoff valve is opened automatically whenever the FUS TANK transfer pump switch is set to ON.

CAUTION

The motorized fuel shutoff valves incorporate two Teflon sealing gaskets, one black and one white, against the ball valves. The black gaskets incorporate a small orifice to relieve system pressure. Therefore, when reinstalling the motorized fuel shutoff valves, always position the valve with the black gasket to the pressure side (nearest the pump). Where pressure is exerted on both sides, such as the crossflow and transfer valves, position the black gasket to the side with the greatest pressure (nearest the pump).

FIREWALL SHUTOFF VALVE FUNCTIONAL CHECK. Two mechanics are required to perform this check; one in the cockpit operating the valve switch and one in the tailcone access hole checking valve operation.

a. Set battery switch to ON and LH firewall shutoff switch OFF; the LH firewall shutoff valve should close. This can be determined by visually checking pointer on the valve.

b. Set the LH firewall shutoff switch to ON; the valve should open. The pointer on the valve will visually indicate open.

c. Cycle the valve three times using the LH firewall switch to insure proper valve operation.

d. Perform steps a, b, and c for the RH shutoff valve.

e. Return system to normal by setting firewall switches to ON and battery switch to OFF.

A Aircraft 23-070 thru 23-099.

B Aircraft 23-003 thru 23-069.

1. O-Ring
2. Tube Assembly
3. Nut
4. Lockwasher
5. Fuel Cell Structure
6. Fuel Cell Bladder
7. Float Switch
8. Gasket
9. Access Cover (With Vent)
10. Bolt
11. Access Cover
12. Fuel Line
13. Drain Line
14. Plate
15. Fuel Pump
16. Clamp
17. Refuel Tube, RH
18. Drain Valve
19. Hose
20. Refuel Tube, LH
21. Fuel Cell Bladder
22. Fuel Cell Structure
23. Gasket
24. Fuel Pump
25. O-Ring
26. Union
27. Drain Line
28. Refuel Tube, LH

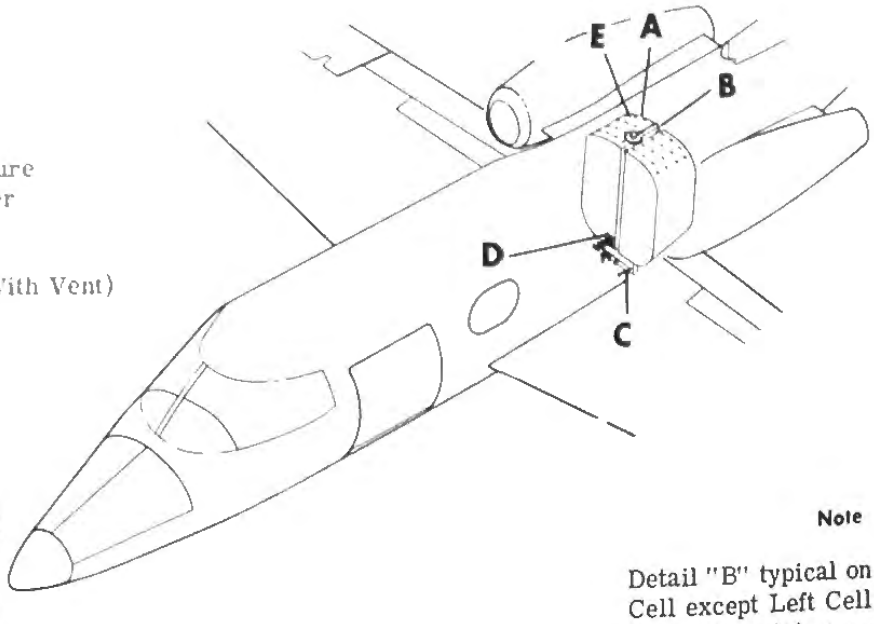

Note

Detail "B" typical on Left and Right Cell except Left Cell access cover does not contain a vent.

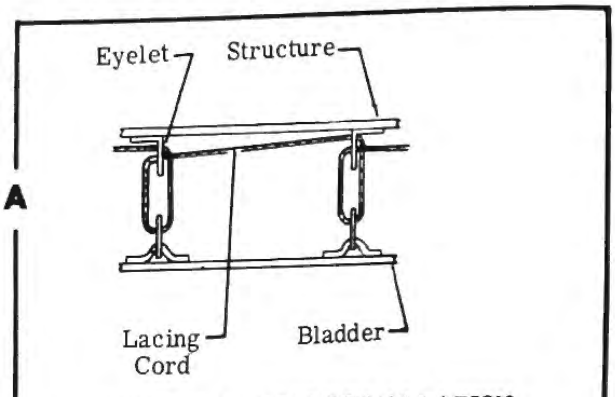

TYPICAL LACING INSTALLATION

D

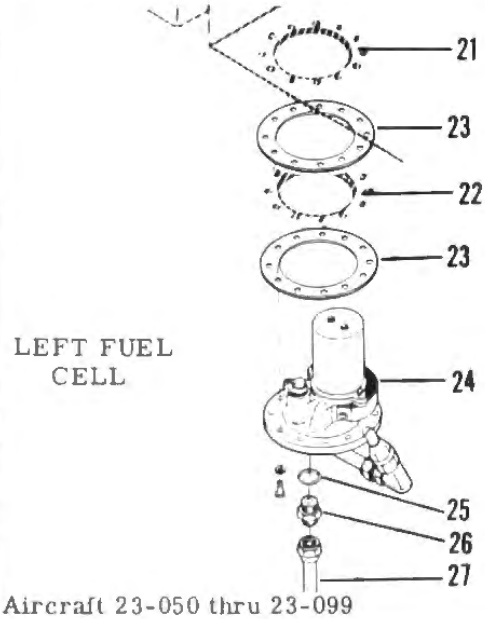

LEFT FUEL CELL

Aircraft 23-050 thru 23-099

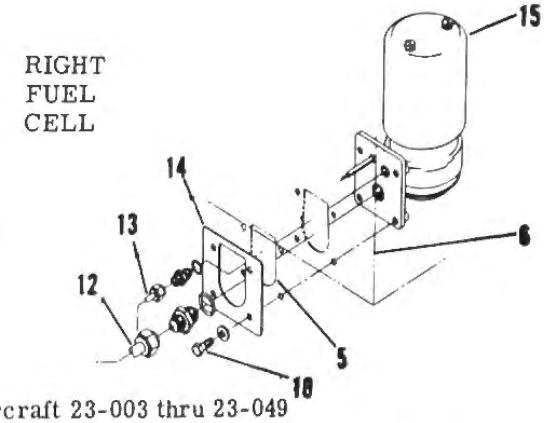

RIGHT FUEL CELL

Aircraft 23-003 thru 23-049

Figure 5-12. Fuselage Fuel Tank Installation (Sheet 1 of 2)

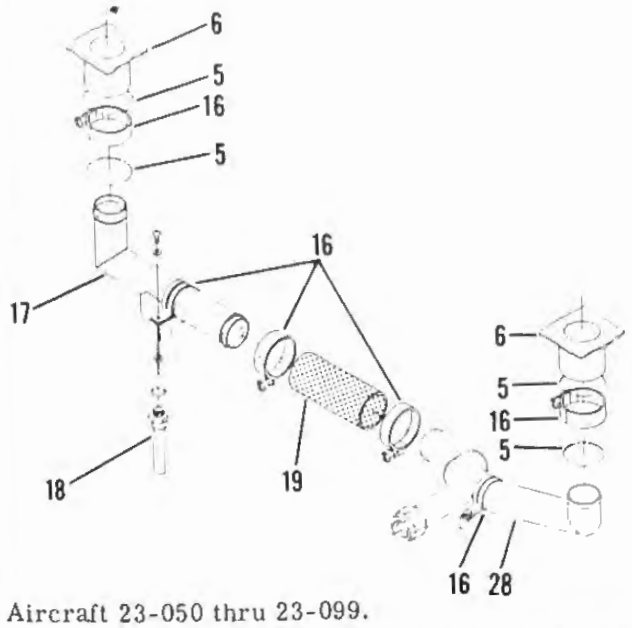

Aircraft 23-050 thru 23-099.

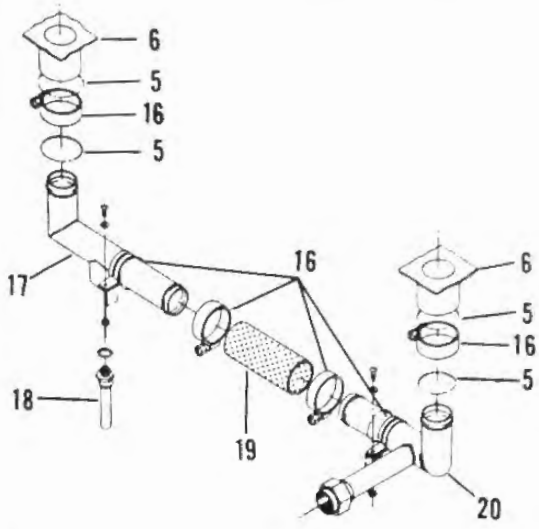

Aircraft 23-003 thru 23-049.

C

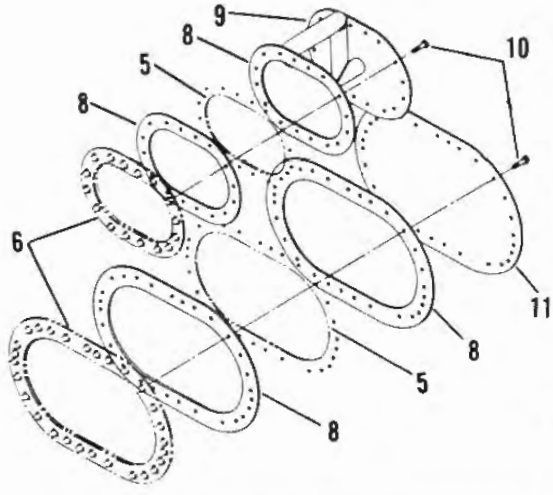

B

E

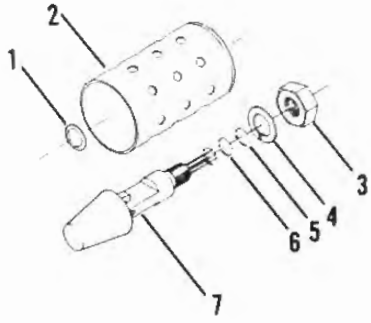

Figure 5-12. Fuselage Fuel Tank Installation (Sheet 2 of 2)

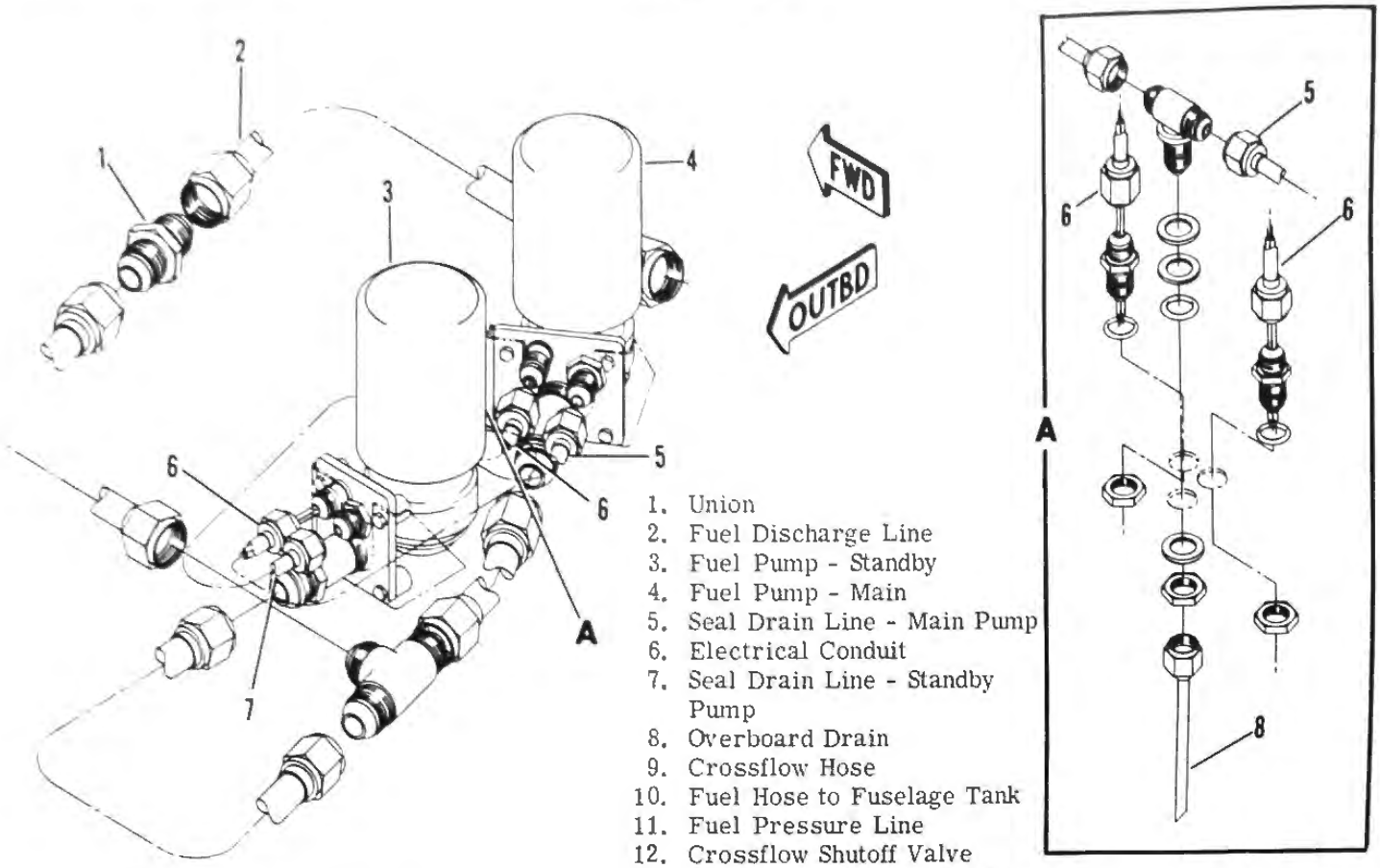

1. Union
2. Fuel Discharge Line
3. Fuel Pump - Standby
4. Fuel Pump - Main
5. Seal Drain Line - Main Pump
6. Electrical Conduit
7. Seal Drain Line - Standby Pump
8. Overboard Drain
9. Crossflow Hose
10. Fuel Hose to Fuselage Tank
11. Fuel Pressure Line
12. Crossflow Shutoff Valve
13. Fuselage Tank Transfer Line
14. Pressure Switch - Tip Tank

Aircraft 23-003 thru 23-017

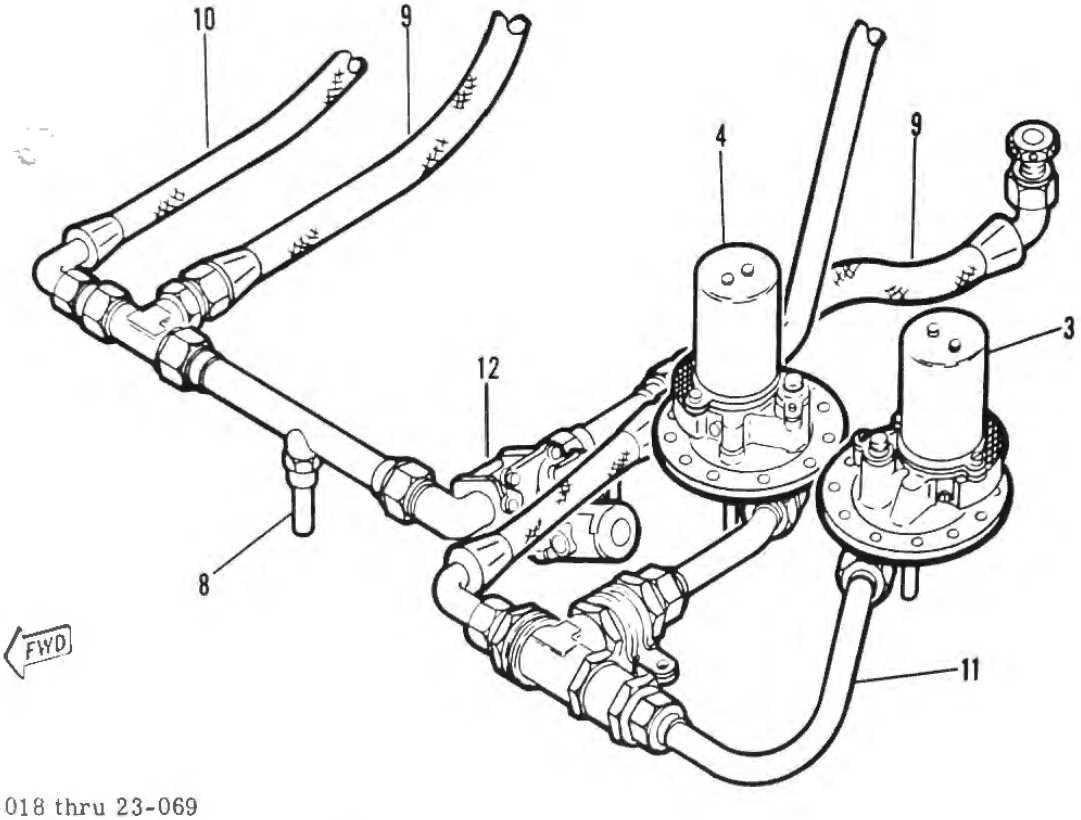

Aircraft 23-018 thru 23-069

Figure 5-13. Wing Fuel Boost Pump Installation (Sheet 1 of 2)

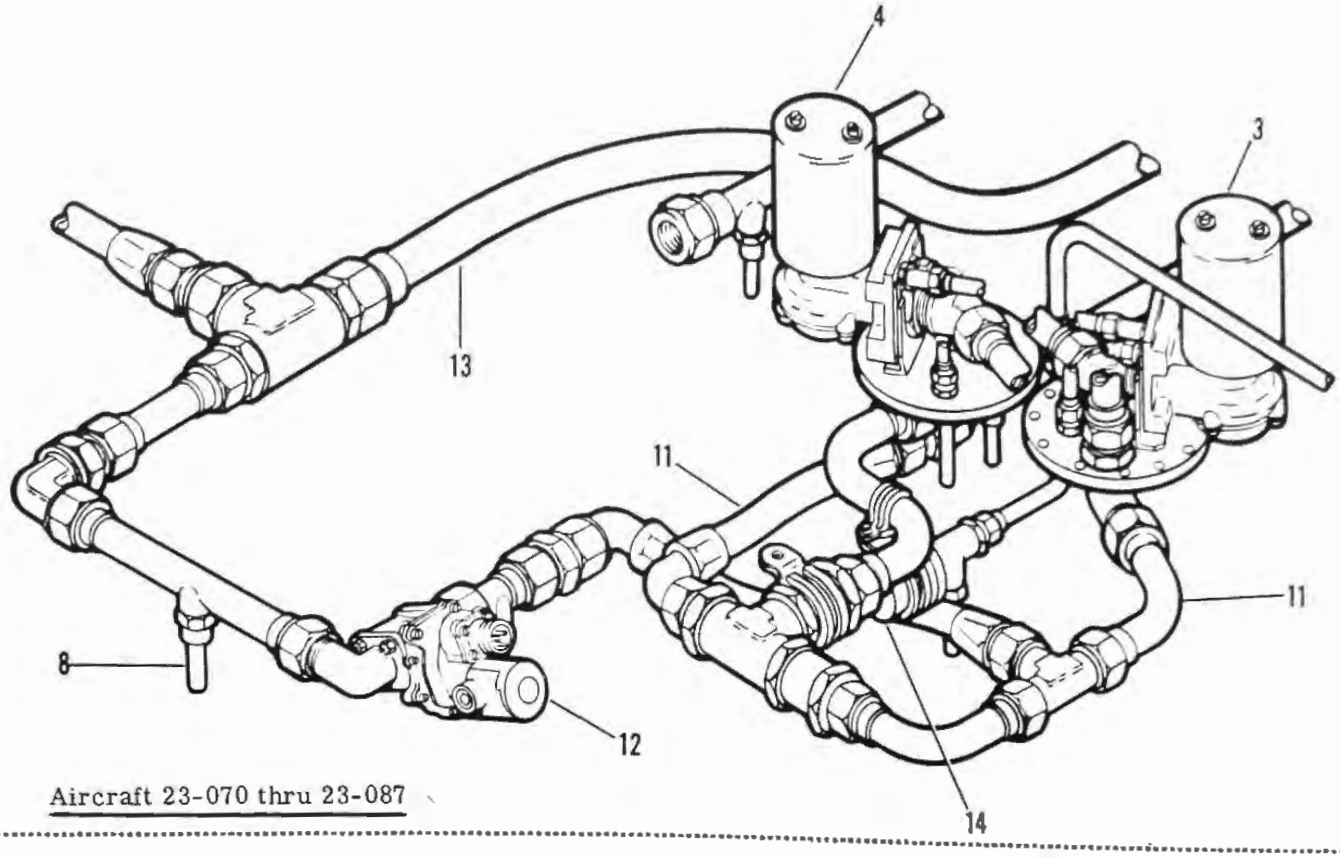

Aircraft 23-070 thru 23-087

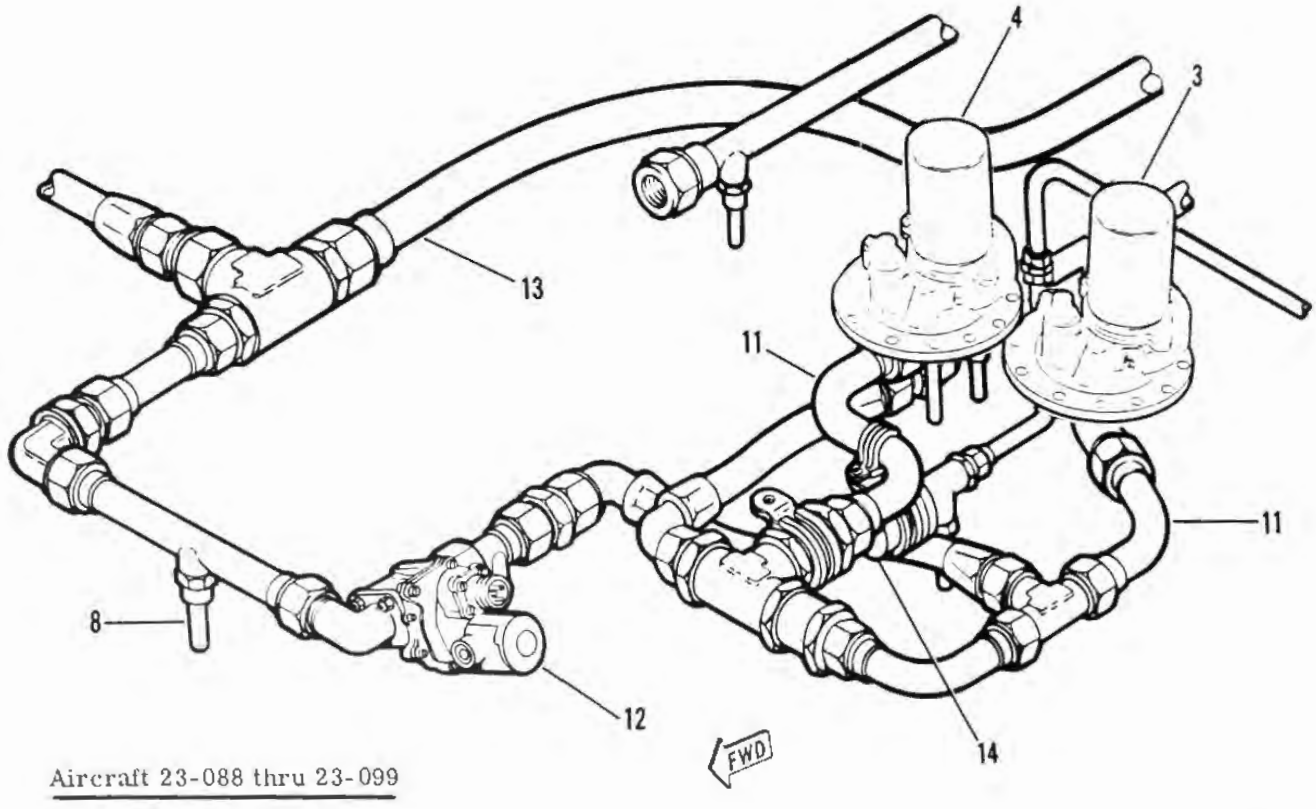

Aircraft 23-088 thru 23-099

Figure 5-13. Wing Fuel Boost Pump Installation (Sheet 2 of 2)

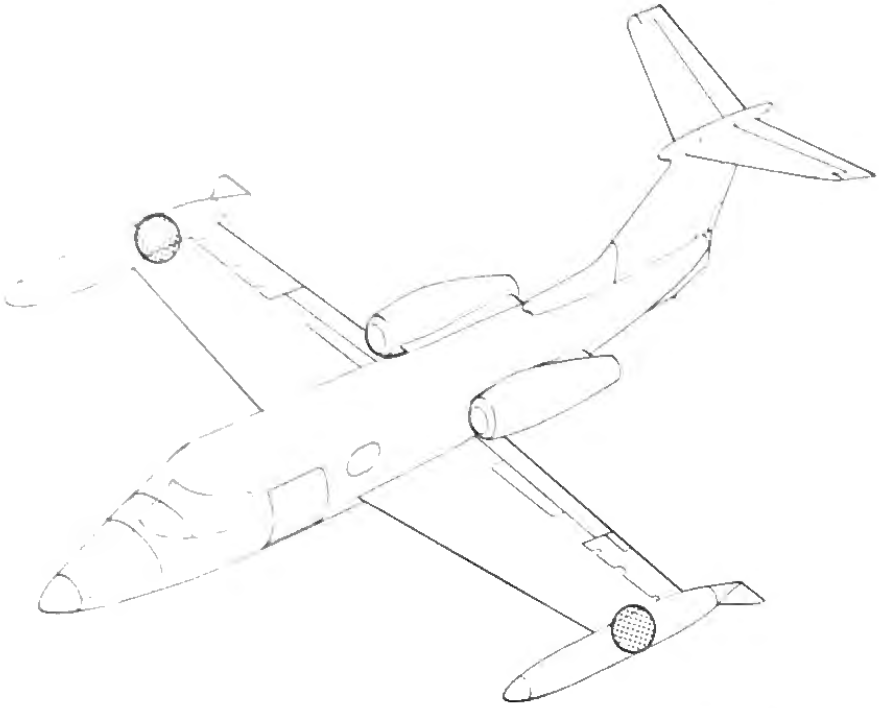

1. Vent Line
2. Electrical Conduit
3. Fuel Boost Pump
4. Gasket
5. Access Cover
6. Drain Valve
7. Fuel Pump Drain
8. Fuel Probe
9. Fuel Discharge Line
10. Vent Valve
11. Pressure Line
12. Pressure Switch
13. Tank Unit
14. Directisyn Flux Valve
15. Navigation Light
16. Fuel Line
17. Vent Standpipe
18. Vacuum Relief Valve

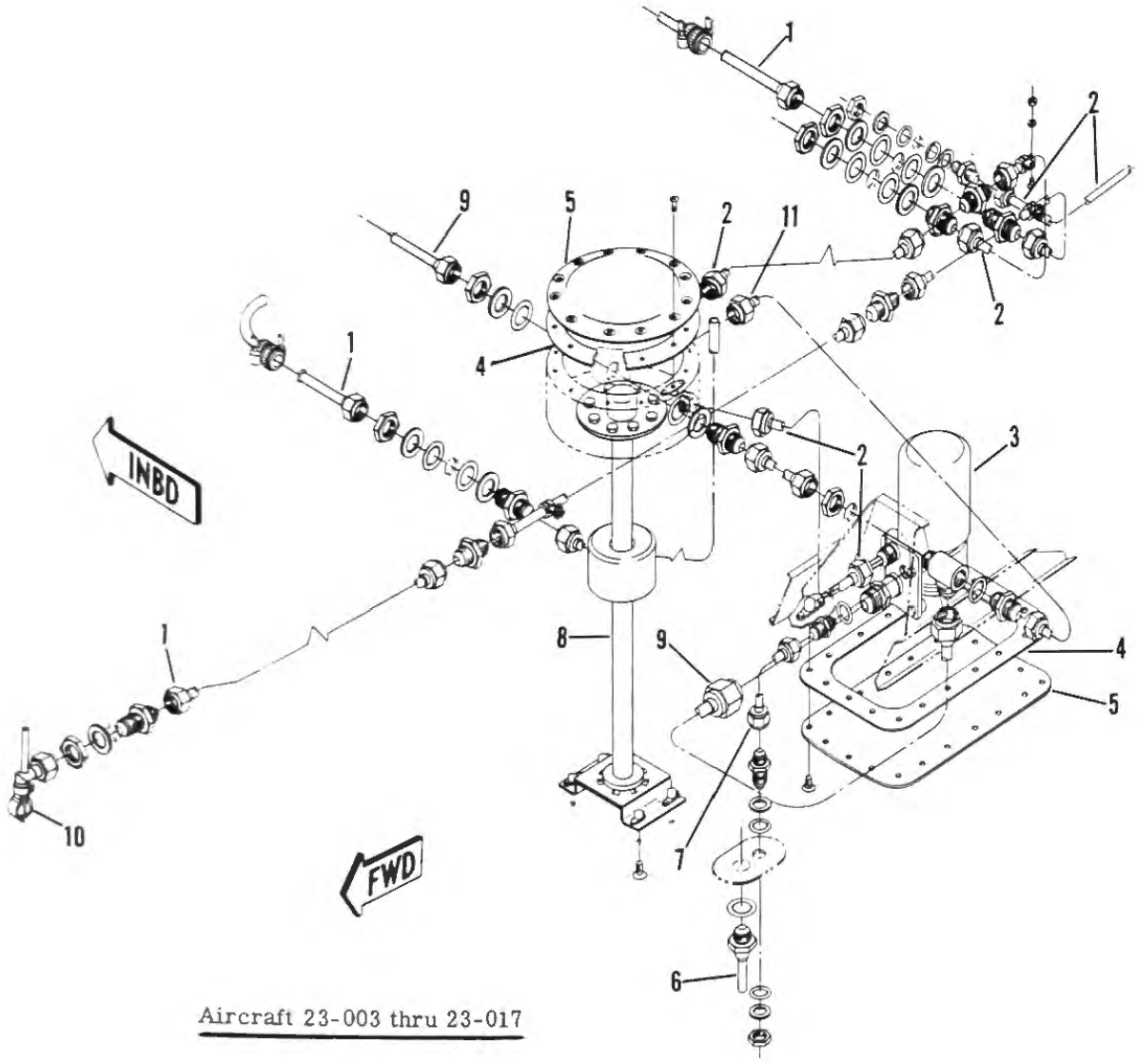

Aircraft 23-003 thru 23-017

Figure 5-14. Tip Tank Plumbing Installation (Sheet 1 of 2)

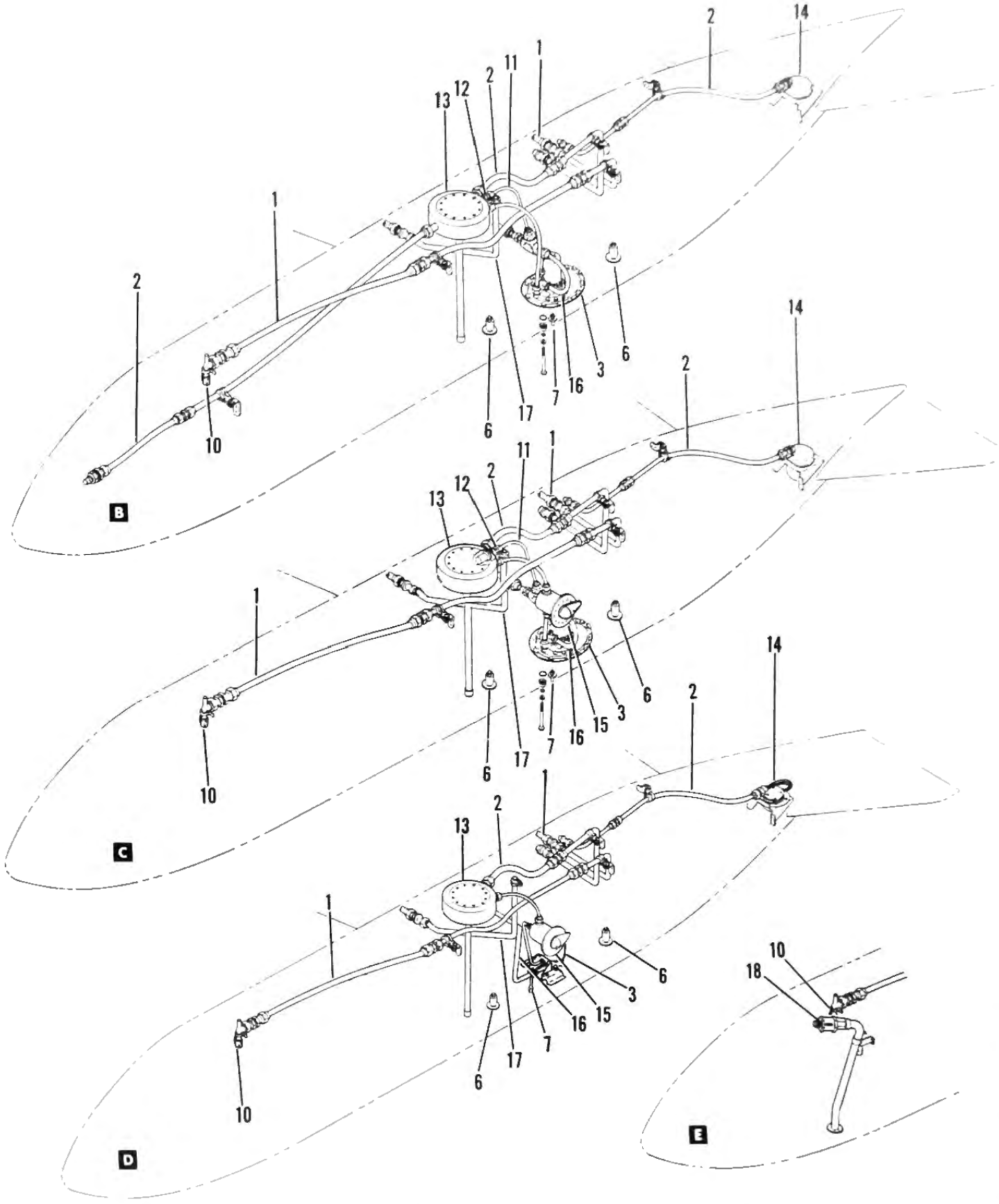

B Aircraft 23-018 thru 23-051 except aircraft 23-028 thru 23-051 modified by SK23-136.

C Aircraft 23-052 thru 23-069 and aircraft 23-028 thru 23-051 modified by SK23-136.

D Aircraft 23-070 thru 23-099

E Aircraft modified per AMK71-4

Figure 5-14. Tip Tank Plumbing Installation (Sheet 2 of 2)

FUEL FILTERS. (See figure 5-16.) A low pressure fuel filter is installed in each engine fuel line and a high pressure fuel filter is installed in each engine fuel system. Each filter incorporates a bypass valve designed to open at [A] 2.0 (±0.3) or [B] 2.5 psi differential. On [C], a pressure switch is installed in each fuel filter. The pressure switch turns on the FUEL BYPASS light on the switch and warning light panel when bypassing occurs.

Note

- Each low pressure fuel filter element should be removed and cleaned in accordance with current inspection requirements, Section VIII.
- It is recommended that all affected gaskets and O-rings be replaced when fuel filter elements are removed and cleaned.
- [D] Torque fuel filter T-bolts to 45 to 50 inch-pounds as indicated by the decal on the filter bowl.

The element is removed by removing the filter bowl and attaching parts. For information relative to the high pressure fuel filter, refer to the Engine Maintenance Manual.

FUEL TEMPERATURE WARNING SYSTEM. [F] The fuel temperature warning system consists of a thermal switch in each wing tank sump and a HOT FUEL warning light on the readout panel. The light comes on if fuel temperature reaches 82° (±3°) F and goes out when the temperature drops to 75° (±3°) F. The aircraft shall not be operated at altitudes above 25,000 feet when the HOT FUEL light is lighted.

RAM AIR FUEL VENT SYSTEM. (See figure 5-17.) The ram air fuel vent system provides continuous ram air pressure to the fuselage fuel tanks, the tip tanks, and the wing tanks while the aircraft is in flight. Components of the ram air fuel vent system are: two ram air masts, two check valves, two relief valves, an aft sump assembly, a forward sump assembly, and an overboard vent line.

a. Operation. (See figure 5-17.) When the aircraft is in flight, ram air is admitted through the ram air masts, located on the left and right side of the ventral fin. From the left ram air mast, ram air flows through the check valve to the relief valve and the forward sump assembly. From the right ram air mast, ram air flows through the check valve to the relief valve, the right fuselage fuel tank and the forward sump assembly. From the forward sump assembly the ram air flows, via the wing vent line, to the left and right tip tanks. The wing tanks receive ram air through the tip tank and wing interconnect. When pressure in the fuel tank reaches the psi setting of the two relief valves, the relief valves, located between the inlet line and the aft sump assembly, open and allow excess pressure to be vented overboard. This excess pressure is vented through the aft sump assembly and the overboard vent line. The operation of the ram air fuel vent system eliminates any overpressurization or vacuum formation. A water drain line is located on each sump assembly to drain any accumulation of water or sediment.

FUEL VENT PRESSURE RELIEF VALVE FUNCTIONAL CHECK. (See figure 5-18.)

a. Disconnect left vent tube (4) at interconnect (17).
b. Plug aft line to insure airflow through the left relief valve.

Note

Disconnecting the vent lines isolates the left vent system from the right vent system.

c. Check relief valve operation by applying pressure (21 to 27 inches of water) to the left mask. A sudden loss in indicated pressure will occur when the relief valve opens.
d. Reassemble system, then repeat same check on the right vent system.

FUEL VENT SYSTEM CHECK VALVES. (See figure 5-18.) Two check valves, one in each vent line forward of the ram air masts, are installed in the vent system. The purpose of the check valves is to provide lightning strike protection by preventing fuel vapor from escaping through the ram air masts. The check valves must be removed, disassembled and cleaned in accordance with current inspection requirements, Section VIII, as follows:

a. Remove access covers from the tailcone as required to gain access to and remove the check valves.
b. Disassemble valves as shown in detail E.
c. Clean valve thoroughly, using Stoddard solvent or equivalent. Particular attention should be given to the area of the flapper seal and the flapper seat on the valve body.
d. Reassemble the check valves using new crush washer, P/N F61A1718-9.
e. Torque valve body in valve case 75 to 80 foot-pounds. Reinstall check valves in aircraft.

REMOVAL AND INSTALLATION OF RAM AIR FUEL VENT SYSTEM. Removal and installation of the ram air fuel vent system components should be performed as shown in the exploded view sequence in figure 5-18.

[A] Aircraft 23-003 thru 23-014 modified by SK23-66
[B] Aircraft 23-003 thru 23-014 not modified by SK23-66
[C] Aircraft 23-026 and 23-027 and aircraft modified by SK23-89A
[D] Aircraft 23-003 thru 23-024
[E] Aircraft 23-028 thru 23-099
[F] Aircraft equipped with Fuel Temperature Warning System

FUEL SUPPLY LINE CHECK VALVES. (See figure 5-14A.) Four fuel supply line check valves are installed adjacent to, and down stream from each jet pump and fuel boost pump in the wing. These check valves prevent fuel from being pumped backwards through each pump by its adjacent pump. The flapper type check valves each have a small orifice in the flapper which allows fuel to drain back from the engines after engine shutdown.

FUEL SUPPLY LINE CHECK VALVE INSPECTIONS. The fuel supply line check valves must be removed and inspected, and cleaned if necessary, in accordance with Current Inspection Intervals, Section VIII as follows:

Note

It is desirable to remove and install the check valves with the aircraft defueled. Refer to Section I for defueling.

a. Remove lower fuselage access panels to gain access to the fuel supply line check valves.

b. Disconnect plumbing from check valves and remove check valves from tee.

Note

Disassembly of the check valve is not normally required unless the check valve is extremely contaminated. If valve must be disassembled it must be reassembled using a new gasket.

c. Hold valve assembly next to a light source and look through the center of the valve to assure that orifice is not obstructed. If necessary clean orifice and thoroughly flush valve using kerosene.

Note

The orifice in the flapper is either next to the rivet or through the rivet.

d. Install check valves on tee using new O-ring packings.
e. Connect plumbing to check valves.
f. Inspect plumbing and check valves for leaks.
g. Install lower access panels.

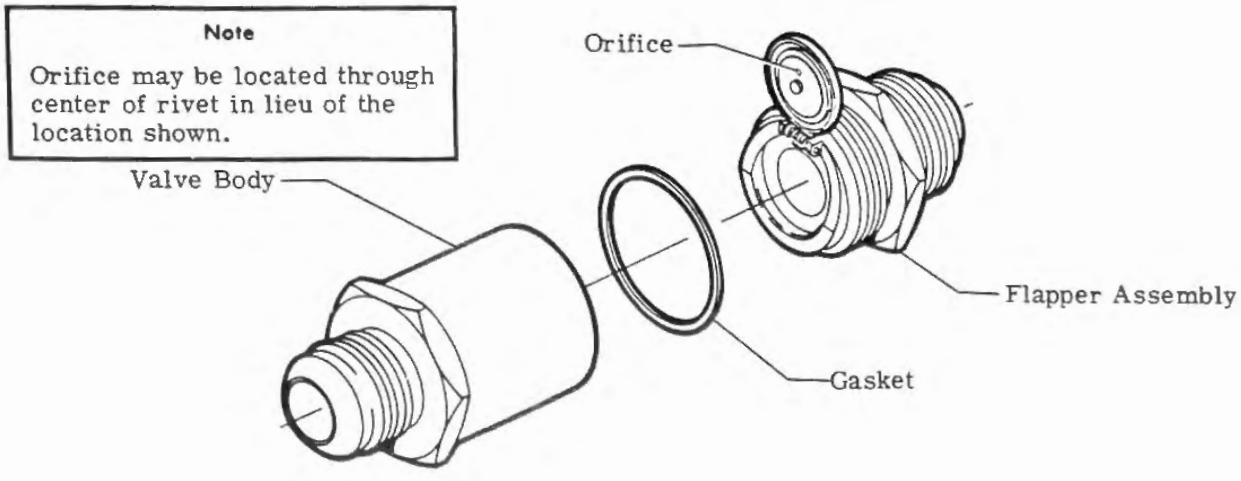

Figure 5-14A. Fuel Supply Line Check Valve Inspection

1. Fuel Pressure Line - Right Engine
2. Check Valve
3. Main Shutoff Valve
4. Pressure Switch
5. Fuel Filter
6. Overboard Drain
7. Fuel Pressure Line - Left Engine
8. Fuel Pump - Fuselage Transfer
9. Fuselage Crossflow
10. Fuel Line - From Fuselage Tank
11. Relief Valve
12. Fuselage Fuel Tank Shutoff Valve
13. Main Fuel Shutoff Valve - Left Engine
14. Crossflow Hose - Wing Tank
15. Standby Fuel Pump
16. Fuel Line From Standby Pump
17. Fuel Line From Main Pump
18. Crossflow Shutoff Valve
19. Main Fuel Pump
20. Main Fuel Shutoff Valve - Right Engine
21. Fuselage Tank Refuel Shutoff Valve

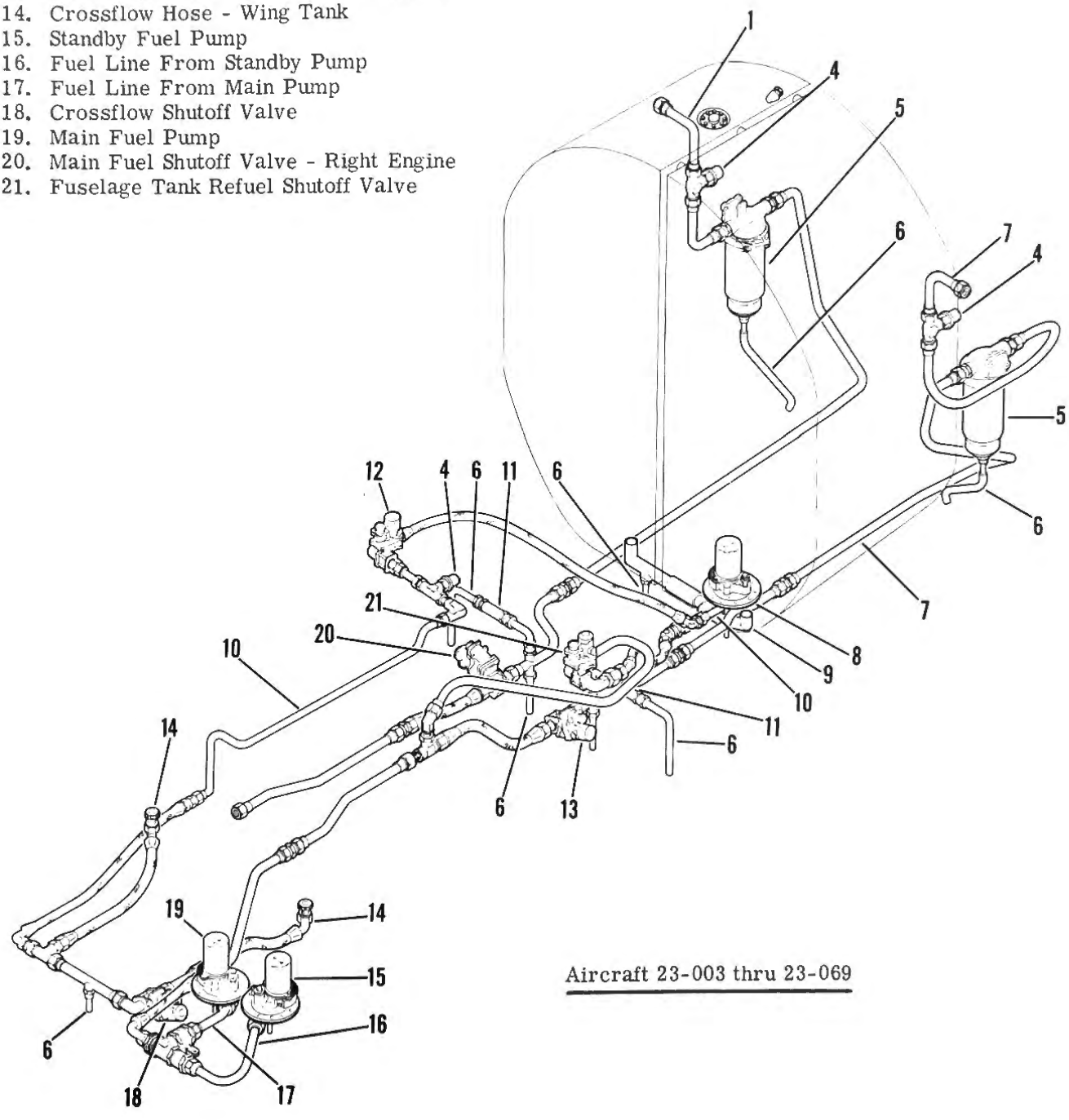

Aircraft 23-003 thru 23-069

Figure 5-15. Motorized Fuel Shutoff Valves Installation (Sheet 1 of 2)

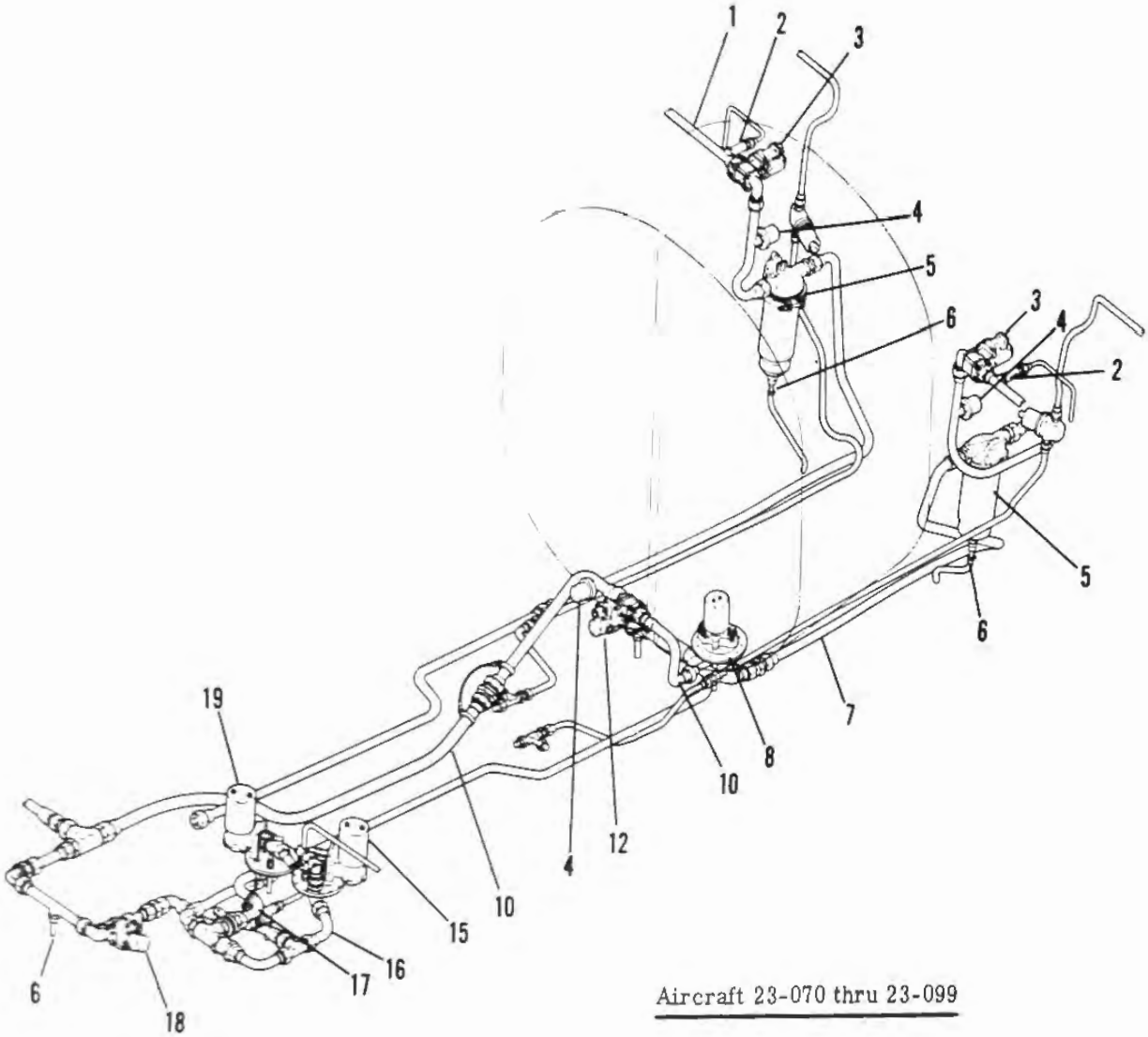

Aircraft 23-070 thru 23-099

Figure 5-15. Motorized Fuel Shutoff Valves Installation (Sheet 2 of 2)

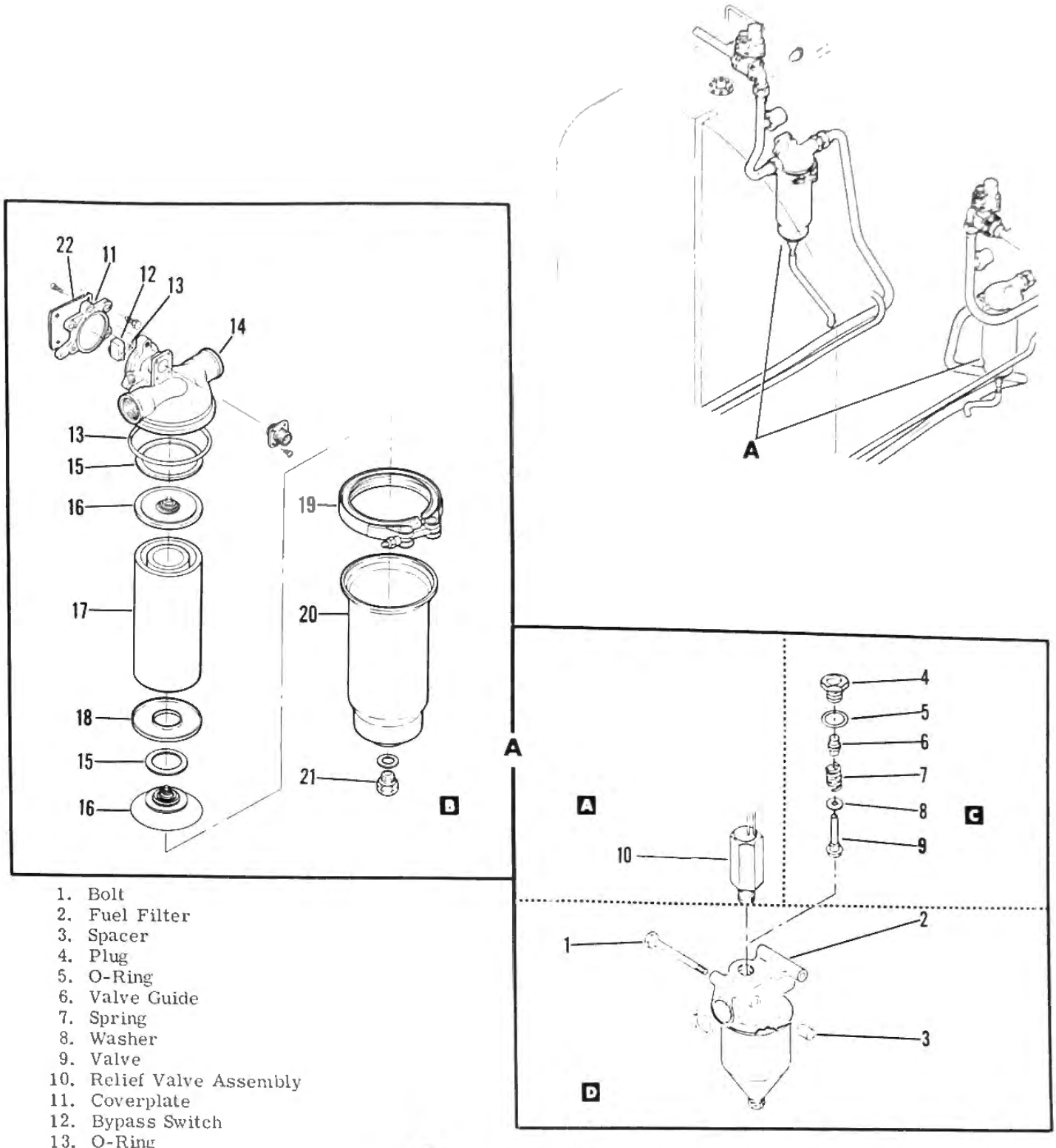

1. Bolt
2. Fuel Filter
3. Spacer
4. Plug
5. O-Ring
6. Valve Guide
7. Spring
8. Washer
9. Valve
10. Relief Valve Assembly
11. Coverplate
12. Bypass Switch
13. O-Ring
14. Filter Head
15. Gasket
16. Bypass Valve
17. Element
18. Lower End Cap
19. Clamp
20. Bowl
21. Drain Plug
22. Spacer

A Aircraft 23-026 and 23-027 and aircraft 23-015 thru 23-025 modified by SK23-89A.
B Aircraft 23-028 thru 23-099.
C Aircraft 23-003 thru 23-014 and 23-015 thru 23-025 not modified by SK23-89A.
D Aircraft 23-003 thru 23-027.

Figure 5-16. Fuel Filter Installation

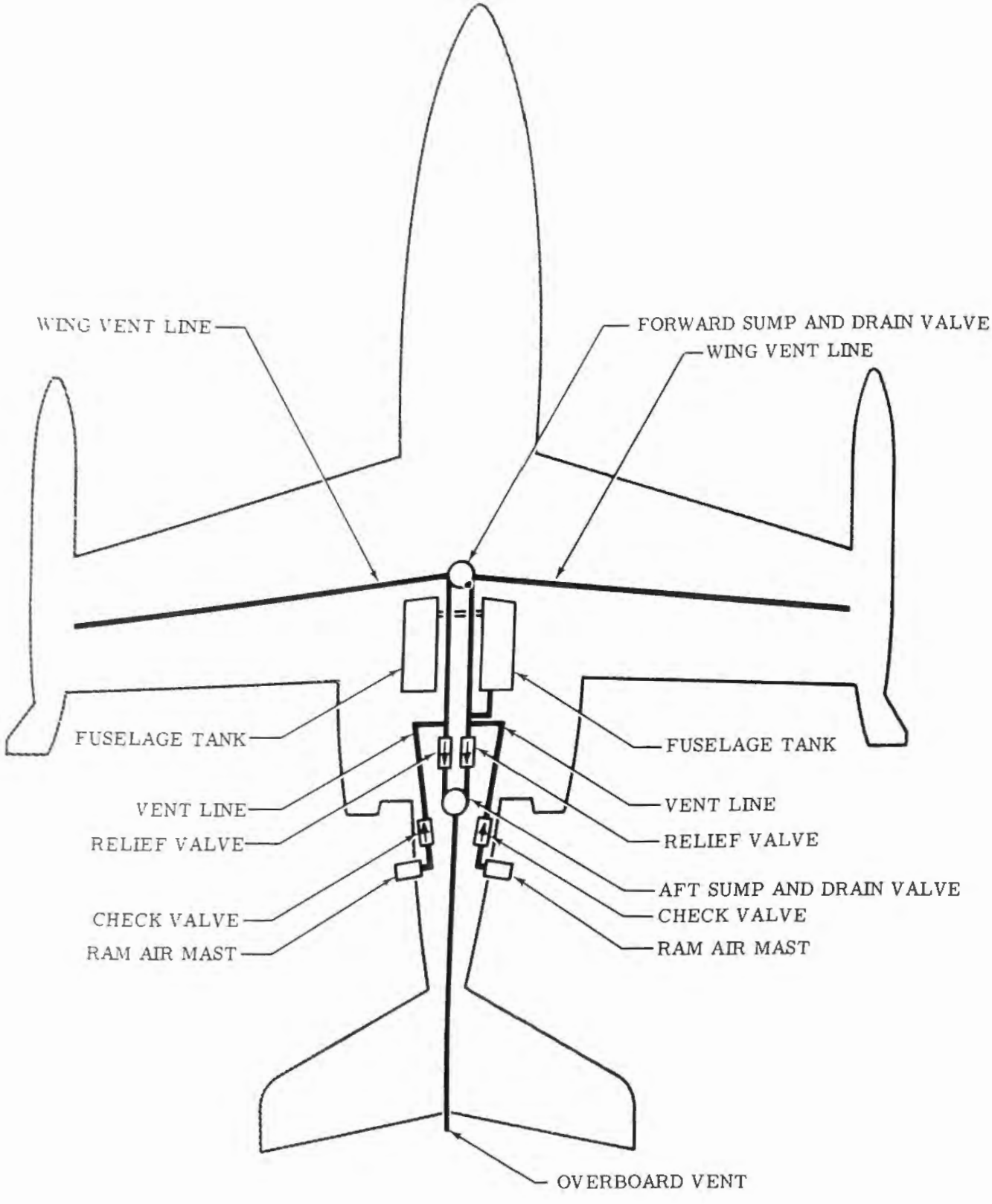

Figure 5-17. Ram Air Fuel Vent System Schematic

RESISTANCE-TYPE FUEL QUANTITY INDICATING SYSTEM [D]. (See figure 5-19.) Fuel quantity is indicated by a single fuel quantity indicator which measures the change in resistance of the float-type fuel probe sensors, located in each fuel tank. Seven probes are installed in the system; one in the fuselage tank; two in each wing tank; and one in each tip tank. The fuel quantity indicator, depending on the selector switch setting, provides an indication of the fuel remaining in any selected tank or of the total fuel remaining in all tanks. The indicator dial is graduated in pounds of fuel. Density variations, due to temperature changes, are corrected for by a temperature compensator located on the inboard LH wing tank probe.

FUEL QUANTITY INDICATOR [D]. The indicator contains a permanent magnet rotor to which the pointer is mounted and two stator coils. As the resistance of the potentiometers with the tank probes varies, the magnetic flux of the stator coils varies so as to position the rotor and pointer and thus show liquid quantity. Electrical connection is made through a single multi-pin connector on the back of the unit. A FULL and EMPTY trim potentiometer is also installed in the indicator and may be adjusted at the time of calibration.

[D] Aircraft 23-003 thru 23-024

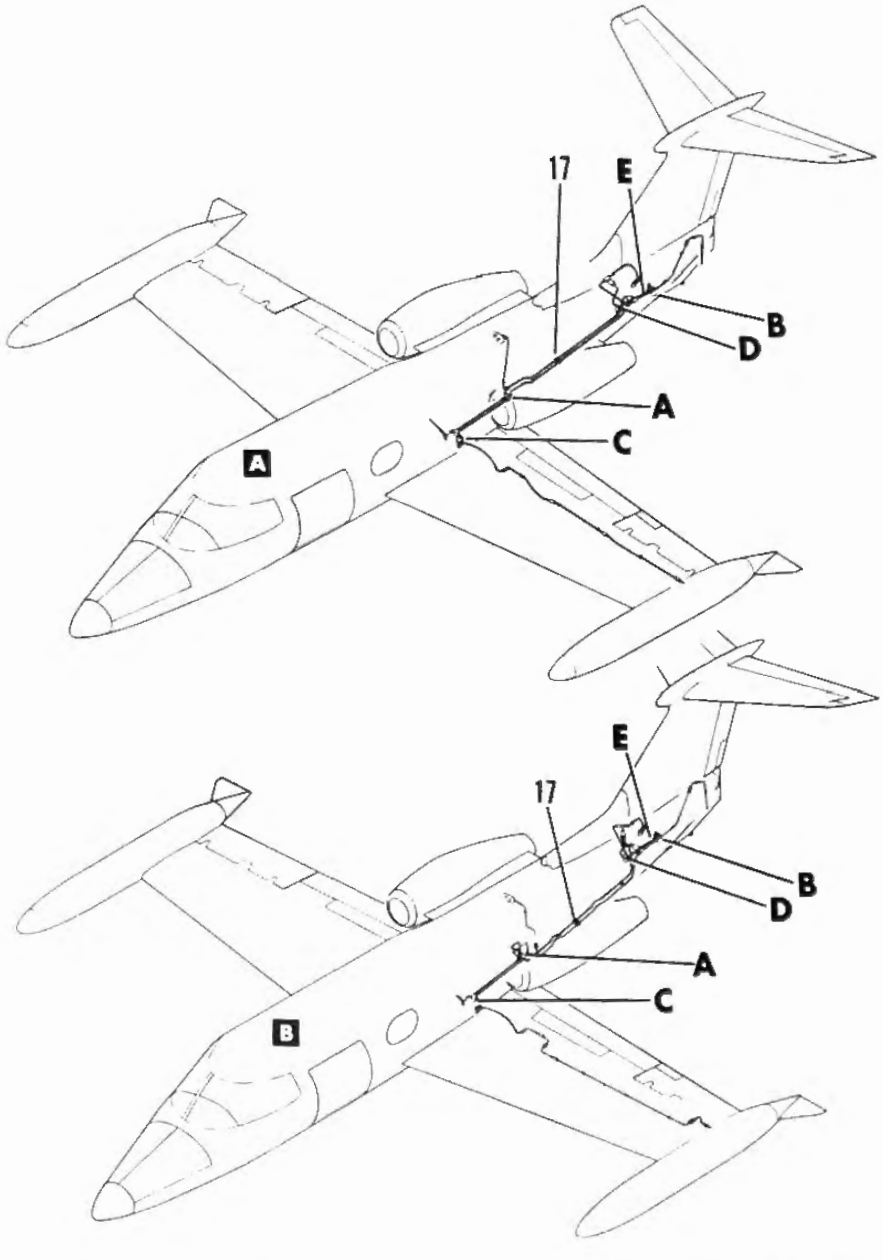

Figure 5-18. Ram Air Fuel Vent System Installation (Sheet 1 of 2)

1. Mast Assembly
2. Clamp
3. Hose
4. Tube Assembly
5. Overboard Vent Tube
6. Check Valve
7. Relief Valve
8. Bolt
9. Nut
10. Washer
11. Drain Valve
12. Aft Sump Assembly
13. Elbow
14. Union
15. Forward Sump Assembly
16. [C] Bonding Jumper
17. Interconnect
18. Valve Case
19. Flapper Seat
20. Flapper
21. Valve Body
22. Crush Washer, P/N F61A1718-9

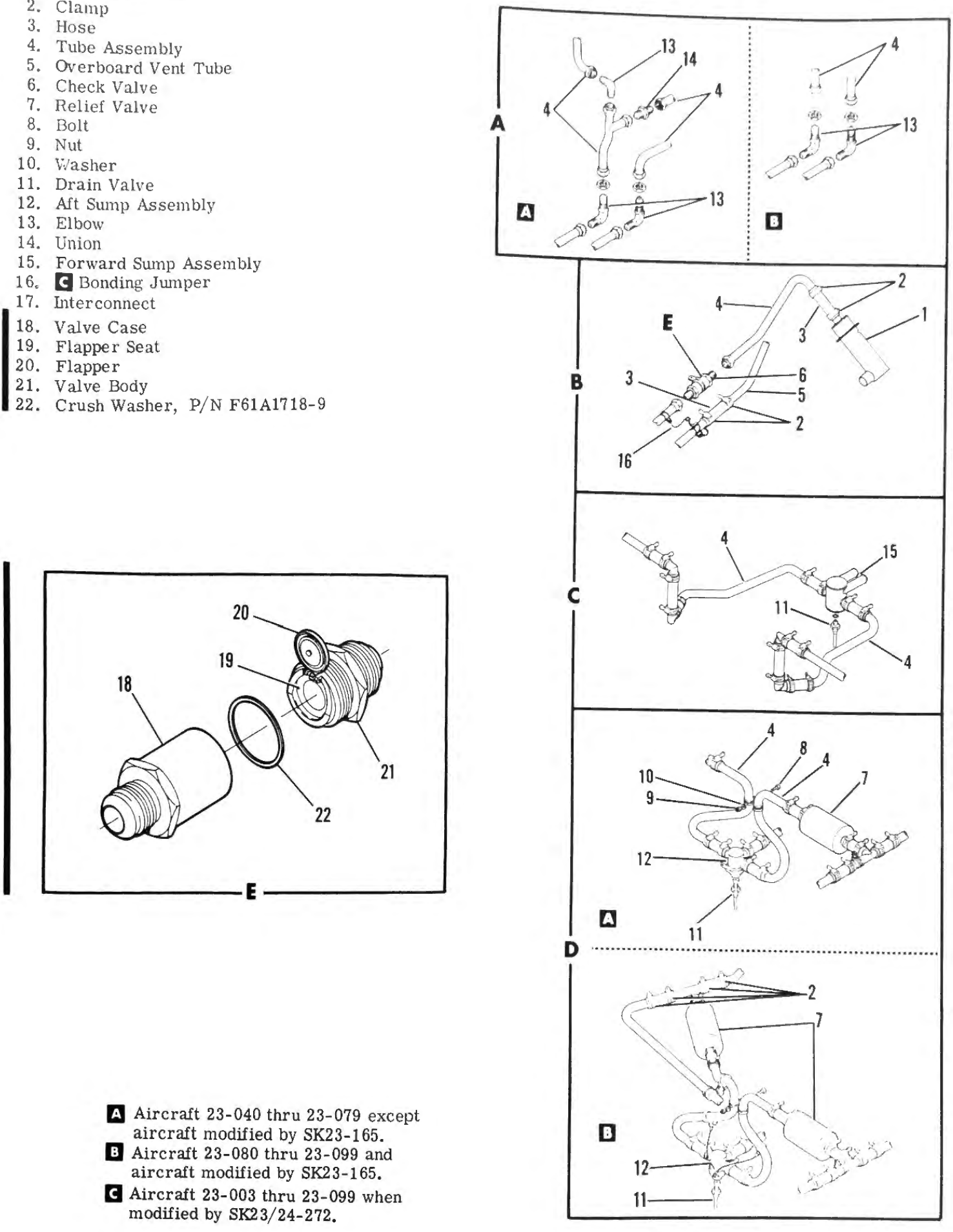

[A] Aircraft 23-040 thru 23-079 except aircraft modified by SK23-165.
[B] Aircraft 23-080 thru 23-099 and aircraft modified by SK23-165.
[C] Aircraft 23-003 thru 23-099 when modified by SK23/24-272.

Figure 5-18. Ram Air Fuel Vent System Installation (Sheet 2 of 2)

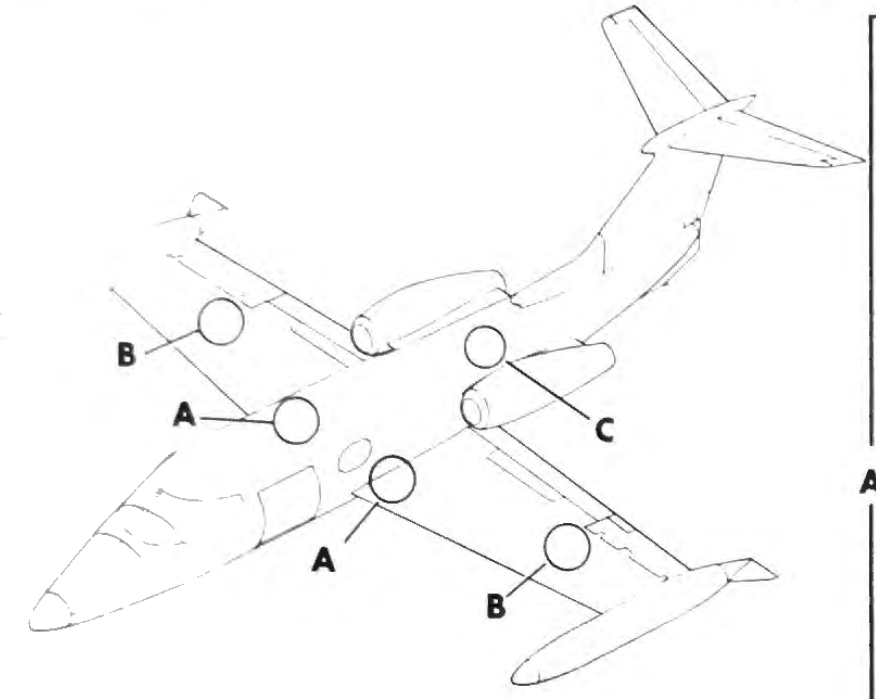

NOTE

For Tip Tank Probe Installation Refer to Figure 5-14.

1. Wing Skin
2. Gasket
3. Fuel Probe Stops
4. Inboard Fuel Probe
5. Outboard Fuel Probe
6. Adapter
7. Fuselage Fuel Probe
8. Fuel Cell Structure
9. Fuel Cell Bladder
10. Retainer
11. Temperature Compensator (Left Wing Only)

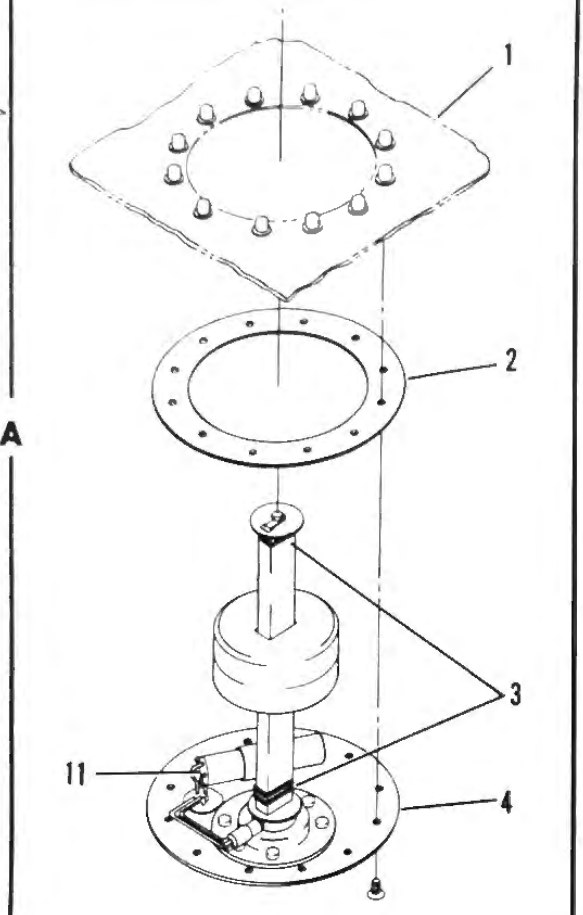

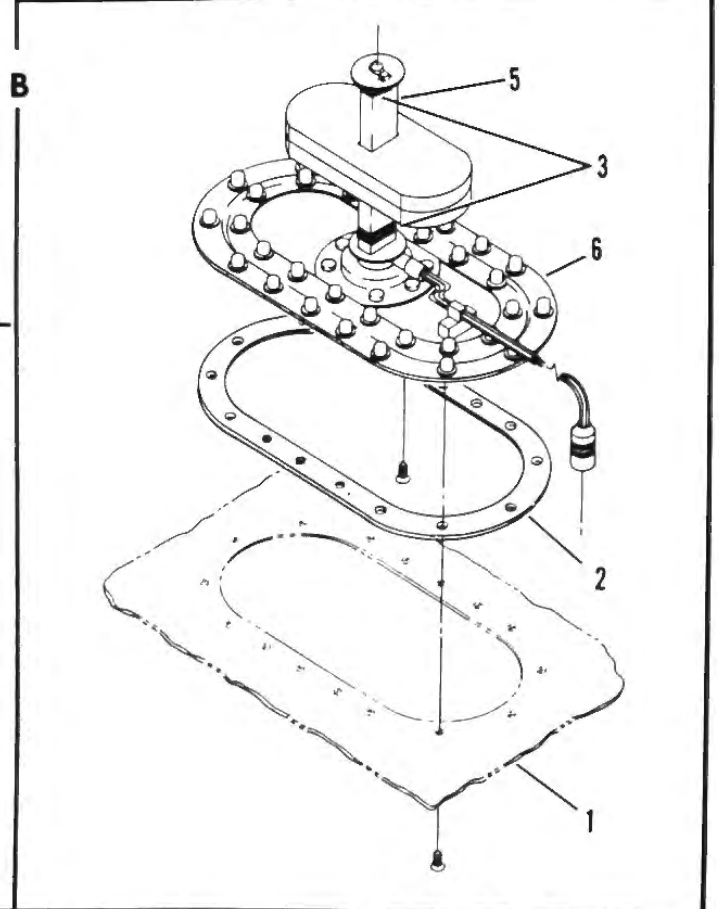

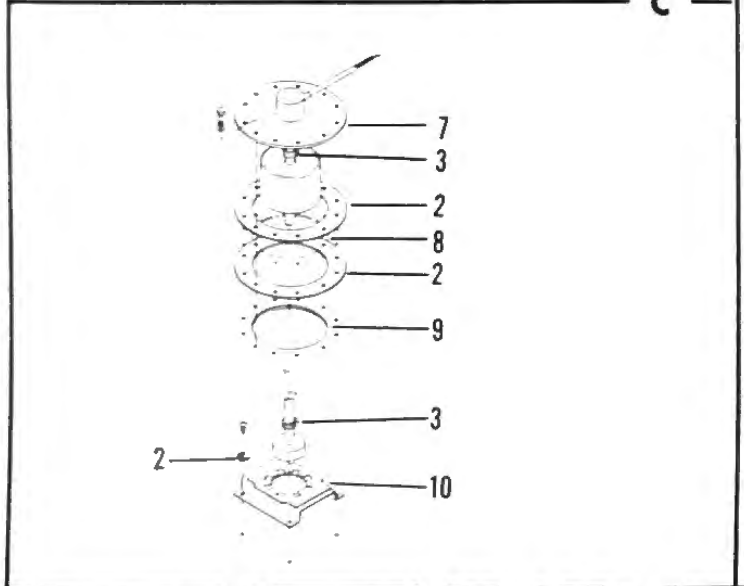

▲ Aircraft 23-003 thru 23-024 except aircraft modified by SK23-195.

▲ Figure 5-19. Fuselage and Wing Fuel Quantity Probe Installation (Sheet 1 of 2)

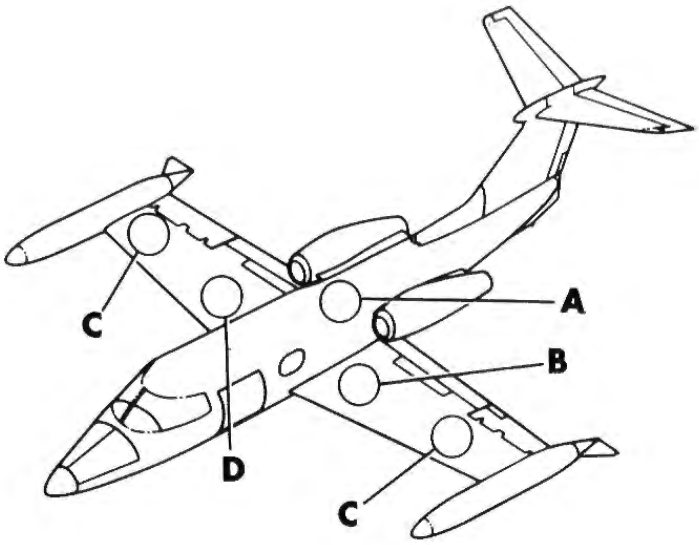

Note

For Tip Tank Probe Installation Refer to Figure 5-14.

1. Fuselage Tank Unit
2. Gasket
3. Retainer
4. Plug
5. O-Ring
6. Clamp Half
7. Bracket
8. Plate
9. Left Wing Inboard Tank Unit
10. Clamp
11. Wing Outboard Tank Unit
12. Right Wing Inboard Tank Unit

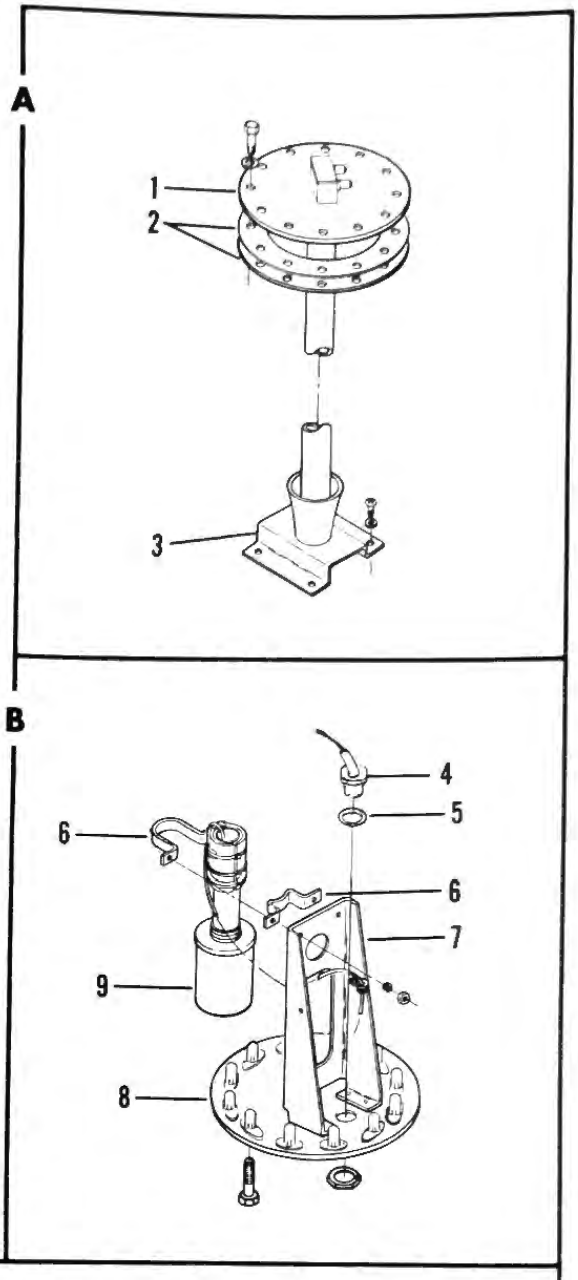

B Aircraft 23-025 thru 23-099 and aircraft modified by SK23-195.

B Figure 5-19. Fuselage and Wing Fuel Quantity Probe Installation (Sheet 2 of 2)

FUEL PROBE SENSORS [A]. (See figure 5-19.) Each wing and tip tank probe contains two fixed wire-wound resistance strips. The fuselage probe contains a single fixed wire-wound resistance strip. A shorting strip with closely spaced flexible fingers serves as a wiper for each resistance strip. A magnet in the float pulls the fingers directly in line with it against the resistance strip. As the float rises, the next finger is drawn down and the lowest one is released. As the float rises, the empty stator coil in the indicator becomes weaker and the full stator coil becomes stronger. This causes the rotor magnet to move toward the full end of the scale. A magnet travel of approximately 90° is geared up to a 300° pointer travel. Changes in fuel temperature is sensed by the temperature compensator, located on the inboard LH wing tank probe. As fuel temperature increases, the resistance of the temperature compensator increases. This tends to drive the pointer downscale and cancels the tendency to move upscale caused by a rise in float height due to expanding fuel.

FUEL PROBE CIRCUIT INSULATION AND HIGH VOLTAGE CHECKS [A]. (See figure 5-20.)

a. Insulation Check. All probes may be removed and checked for insulation resistance between mutually insulated circuits of the individual transmitter, using a General Radio Megohmmeter, Type 1862B, or equivalent, at 500-volt drive. Minimum limit is 100 megohms. Test the resistance of the probes in accordance with figure 5-20. Only qualified personnel should perform this test.

Note

Lightly tap the probe before taking the readings.

TEMPERATURE COMPENSATOR TEST [A]. (See figure 5-21.)

a. Connect the Temperature Compensator circuit (Pins E and F) of the B820-3196-1 (L Wing Inboard) probe as shown.

Note

The 1000-ohm resistor is included to prevent the Compensator from heating and giving a wrong reading. The value of this resistor should be measured and the deviation from 1000 ohms should be included with those noted in step b.

b. Submerge the unit in water at a temperature of 70° F. The resistance should be 1342 to 1366 ohms.

Probe No.	Float Position	Color Code (Leads)	Resistance (Ohms)
B820-2880 (Tip Tanks)	Empty	White to Blue Red to Black	246.3 (±8.5) 1.9 (±1.5)
	Full	White to Blue Red to Black	2.4 (±2.0) 246.3 (±8.5)
B820-2882 (Fuselage Tank)	Empty	Blue to White White to Red	161.7 (±6.0) 0.7 (±0.7)
	Full	Blue to White White to Red	0.7 (±0.7) 161.7 (±6.0)
B820-3196 (R Wing Inbd.) and B820-3196-1 (L Wing Inbd.)	Empty	Pin A to B Pin C to D	83.9 (±5.0) 1.8 (±1.5)
	Full	Pin A to B Pin C to D	1.8 (±1.5) 83.9 (±5.0)
B820-3197 (R & L Wing Outbd.)	Empty	Pin A to B Pin C to D	142..7 (±8.0) 3.4 (±3.0)
	Full	Pin A to B Pin C to D	5.6 (±4.0) 142.7 (±8.0)

Figure 5-20. Insulation Resistance - Fuel Probe Sensors

[A] Aircraft 23-003 thru 23-024 except aircraft modified by SK23-195.

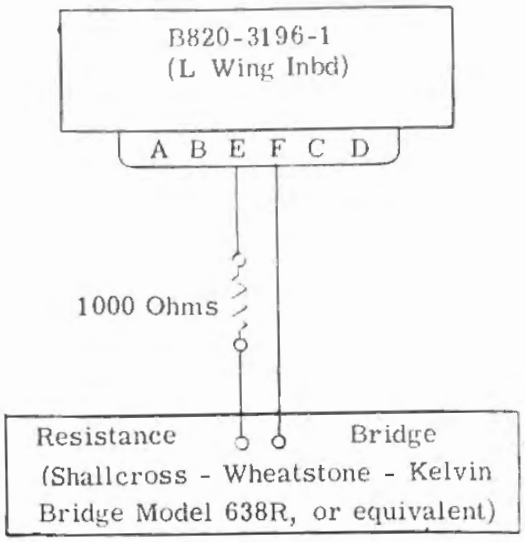

Figure 5-21. Temperature Compensator Test Circuit

FUEL QUANTITY INDICATOR TEST [A] . (See figure 5-22.)

a. Test Equipment Required.
   1. Resistors
      (a) One 354 (±12) ohm
      (b) One 13.0 (±0.10) ohm
      (c) One 1160.0 ohm
      (d) One 28.0 (±0.20) ohm
   2. One SPDT Toggle Switch
   3. One Pushbutton Test Switch
   4. One 0.1 Amp Fuse
   5. 28-Volt DC Power Source

b. Testing.
   1. Connect the indicator and test equipment as shown.
   2. Energize the unit and set switch SW-A to position #1.
   3. The indicator should indicate zero.
   4. If the indicator does not indicate zero, adjust the EMPTY potentiometer on the back of the indicator until it does.
   5. Set switch SW-A to position #2.
   6. The indicator should indicate the top limit of the scale (Full).
   7. If the indicator does not indicate full, adjust the FULL potentiometer on the back of the indicator until it does.
   8. Repeat steps 2 through 7 until no adjustment is required at empty or full.
   9. Depress the test switch. The indicator should fall below the zero increment. When released, it should return to its original indication.

[A] Aircraft 23-003 thru 23-024 except aircraft modified by SK23-195.

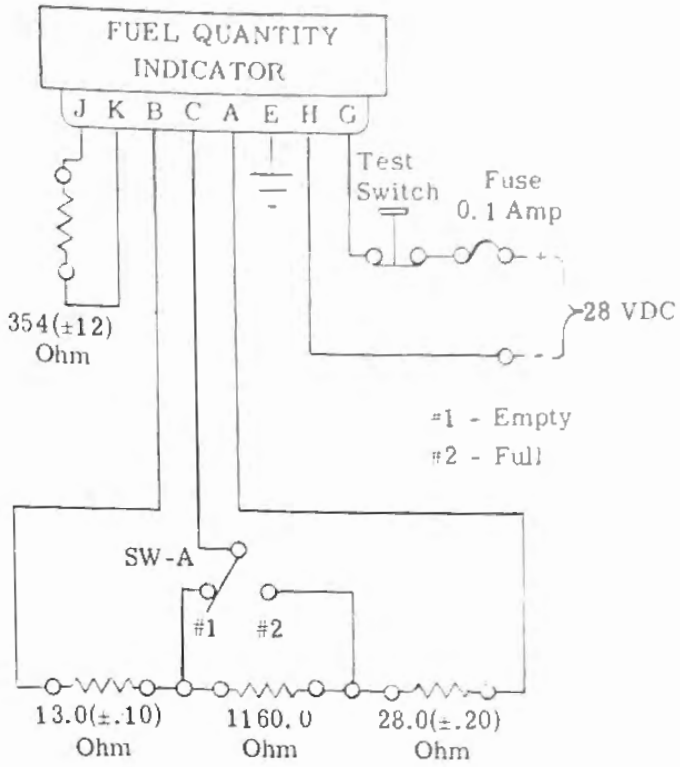

Figure 5-22. Fuel Quantity Indicator Test Circuit

FUEL QUANTITY SELECTOR SWITCH TEST [A] .

a. Using a Simpson Ohmmeter, Model 372, or equivalent, check the resistance of the selector in accordance with figure 5-23. With the switch set to the specified positions, the resistance should fall within the range indicated.

b. External Adjustment Check.
   1. Using a Simpson Ohmmeter, Model 372, or equivalent, check the resistance at the ends of the adjustment on each potentiometer.
   2. Using the ohmmeter across the pins specified in figure 5-24, slowly adjust each potentiometer through its entire range. The ohmmeter should not jump, but should operate smoothly through the range noted.

c. Resistance Value Check of Fixed Resistors.
   1. Using an ohmmeter across the pins referenced in figure 5-25, check that the fixed resistors fall within the allowable tolerance.

d. Megohmmeter Test.
   1. Using a General Radio Megohmmeter, Type 1862B, or equivalent, on the 500-volt range, check the resistance of the Selector Switch circuits as follows: The resistance must not be less than 100 megohms.

Switch Position	Circuit Checked
ALL	Between Pins H & C
ALL	Between Pins G & C
TOTAL	Between Pins F & C

Circuit Check Between Pins	POSITION OF SELECTOR SWITCH					
	L. Tip	L. Wing	Total	R. Wing	R. Tip	Fuselage
F & B	.4	∞	∞	∞	∞	∞
F & E	.4	∞	∞	∞	∞	∞
F & L	∞	.4	∞	∞	∞	∞
F & R	∞	.4	∞	∞	∞	∞
F & J	∞	∞	.4	∞	∞	.4
F & D	∞	∞	∞	.4	∞	∞
F & P	∞	∞	∞	.4	∞	∞
F & M	∞	∞	∞	∞	.4	∞
F & A	∞	∞	∞	∞	.4	∞
G & N	830-1030	∞	.4	∞	∞	∞
G & E	∞	830-1030	∞	∞	∞	∞
G & R	∞	∞	∞	830-1030	∞	∞
G & D	∞	∞	∞	∞	830-1030	∞
G & M	∞	∞	∞	∞	∞	920-1120
H & K	0-23	∞	.4	∞	∞	∞
H & B	∞	0-23	∞	∞	∞	∞
H & L	∞	∞	∞	0-23	∞	∞
H & P	∞	∞	∞	∞	0-23	∞
H & A	∞	∞	∞	∞	∞	0-23
F & C	∞	∞	∞	∞	∞	∞
G & C	∞	∞	∞	∞	∞	∞
H & C	∞	∞	∞	∞	∞	∞
C & Case	.4	---	---	---	---	---

Figure 5-23. Resistance - Fuel Quantity Selector Switch

Switch Position	External Empty Trim Adjustment	Measured Between Pins on Selector Switch	Resistance Tolerance (Ohms)	
			*CW End	*CCW End
Left Tip	Left Tip Tank	H & K	0-1	17-23
Left Wing	Left Wing Tank	H & B	0-1	17-23
Right Wing	Right Wing Tank	H & L	0-1	17-23
Right Tip	Right Tip Tank	H & P	0-1	17-23
Fuselage	Fuselage Tank	H & A	0-1	17-23

* As viewed from the Rear.

Figure 5-24. Potentiometer Resistance

Switch Position	Measured Between Pins on Selector Switch	Fixed Resistor	Allowable Resistance (Ohms)
Left Tip	G & N	R104	921-941
Left Wing	G & E	R102	921-941
Right Wing	G & R	R101	921-941
Right Tip	G & D	R103	921-941
Fuselage	G & M	R105	1009-1031

Figure 5-25. Value Check of Fixed Resistors

FUEL QUANTITY CALIBRATION PROCEDURE [A] .

Note

The aircraft fuel tanks should be empty prior to calibration.

a. Mechanically adjust the external full adjustments on the Selector Switch and Indicator to the approximate center of their adjustments.

Note

This may be done by turning the adjustment one way until it hits the stop, then counting the revolutions, then turning it in the opposite direction until it hits the other stop. Back off one-half the number of turns required from stop to stop.

b. Energize the fuel quantity indicating system.
c. Set the Selector Switch to TOTAL.
d. Adjust the EMPTY adjustment on the back of the indicator until the pointer reads zero.
e. Setting the Selector Switch to each of its other five positions, adjust the respective EMPTY trim adjustments on the Selector Switch until the indicator reads zero at each position.
f. Service the aircraft with fuel. Measure the density of the fuel.
g. Calculate the total weight of fuel placed in the aircraft.
h. With the Selector Switch set to TOTAL, adjust the full adjustment on the back of the indicator to the calculated total weight (±6%) of the fuel.

CAPACITANCE TYPE FUEL QUANTITY INDICATING SYSTEM [B] . (See figure 5-19.) This system is manufactured by Minneapolis-Honeywell and the components are: an indicator and a selector switch on the instrument panel and seven tank units. The tank units are located one in each tip tank, one in the fuselage tank, and two in each wing tank.

FUEL QUANTITY INDICATOR [B] .
a. The indicator basically consists of a hermetically sealed combination transistor power unit and indicator. Its function is to amplify a signal caused by unbalance in a bridge circuit and to convert this signal into a visual indication of fuel quantity in pounds.
b. The unit, of subminiature construction, includes a self-balancing bridge circuit, amplifier stages, motor, gear train, and an indication dial. Electrical connection is made through a single multi-pin connector on the back of the unit.
c. FULL and EMPTY adjustment screws are located on the back of the indicator.

FUEL QUANTITY SELECTOR SWITCH [B] . The switch is a cylindrical-shaped six-position rotary unit, located directly to the right of the fuel quantity indicator. It permits reading of each tank separately as well as the total system.

TANK UNITS [B] . (See figure 5-19.)
a. The tank units are variable capacitors located in each fuel tank to sense fuel quantity. Each tank unit consists of two concentric electrodes which are rigidly spaced at intervals throughout their length by insulating centering spacers.
b. The inner electrode consists of a main body of insulating material with two separately insulating conducting surfaces around its outside face. One conducting surface is grounded and the other is connected to the amplifier input of the system bridge circuit located in the indicator.
c. The outer electrode is an aluminum tube coated on the outside with insulating material. Openings in the unit permit fuel to flow between the electrodes to the same level as that in the tank.
d. Electrical connections to the tank units are made through quick-disconnect electrical connectors on the unit mounting flange.
e. The tank units in each tank are connected in parallel. The fuel is the variable dielectric factor of the capacitor. Capacitance of the tank units provides a continuous signal to the fuel quantity indicator. The tank units are part of the system bridge circuit which receives a power from the secondary winding of a power transformer located in the fuel quantity indicator.

FUEL QUANTITY CALIBRATION PROCEDURE [B] .

Note

The aircraft fuel tanks should be empty prior to calibration.

a. Energize the fuel quantity indicating system.
b. Set the Selector Switch to TOTAL.
c. Adjust the EMPTY adjustment on the back of the indicator until the pointer reads zero.
d. Service the aircraft with fuel. Measure the density of the fuel.
e. Calculate the total weight of fuel placed in the aircraft.
f. With the Selector Switch set to total, adjust the FULL adjustment on the back of the indicator to the calculated total weight (±4.5%) of the fuel.

Note

If erroneous indications are evident in the fuel quantity indicating system, a thorough check should be made of all electrical connections for continuity, security of connections, etc, prior to replacing any component in the system. Refer to applicable wiring diagram when making continuity checks.

[A] Aircraft 23-003 thru 23-024 except aircraft modified by SK23-195.

[B] Aircraft 23-025 thru 23-099 and aircraft modified by SK23-195.

INTEGRAL FUEL TANK SEALING.

a. Fuel tank sealing must be applied so that absolutely no leakage exists. Since the fuel has low surface tension and viscosity, it can flow through extremely small openings. Sealing of the structure that has sealant applied to it must be kept to a minimum to avoid adding excessive weight to the airplane. These factors make sealing an important process. In order to maintain the sealing, it is necessary to understand thoroughly how sealant materials are used and the methods of applying sealant to repair leaking fuel tanks.

b. Damage to integral fuel tank sealing, which has been evaluated as being in need of repair, must be repaired using approved repair procedures. All repairs must be accomplished by the application of approved sealing compounds with special tools.

Note

As a general rule, repair sealant should not be added to areas or parts which were not originally sealed. If the source of leak appears at an area which was not originally sealed, the cause of the leak is probably failure of a pre-pack or faying surface seal not visible. Application of additional sealant would only temporarily stop the leak. A study of the surrounding structure should be made for hidden seals. As an option to replacing a failed pre-pack, injection or faying surface seal, the failed seal may be isolated from fuel by raising (relocating) the seal plane. Raising the seal plane can involve an extensive amount of sealant addition so in many cases structure removal and replacement of the failed seal will be the best action.

c. Sealing compound used for repair is available as Type A for brush application and Type B for flow gun cartridges.

d. Sealing repair in the integral fuel tanks presents a number of problems and, to be satisfactory, directions for doing the work involved must be followed implicitly. Careless workmanship and disregard for basic sealing principles can endanger the safety of the airplane and its personnel. The following conditions are encountered when making leak repairs: Structural repair is sometimes necessary; sealing compounds must be properly prepared and applied; application of sealant is a non-inspectable item as the quality of work cannot, in most instances, be immediately determined upon completion and therefore close attention to details and faithful accomplishment of the functional steps of the repair in the proper order are most essential. The effectiveness of any repair depends entirely upon the skill and integrity of the personnel doing the work. Directions for mixing sealant compounds, sealant work life and the time it takes for the sealant to cure must all be carefully supervised. It must also be remembered that if all preparation work is done properly and then the sealant is applied to a surface that is not properly cleaned, the sealing will not be satisfactory as sealant will never adhere to a dirty surface.

e. Repair of failed sealant is not a speedy operation and less man hours will be expended in the long run if ample time is allowed to properly examine and repair the sealant. Effective original repairs will alleviate repetitious leakage and prevent extensive fuel leak difficulties.

TYPES OF SEALS.

a. Fillet Seals. The basic sealant application to fuel tank structure is the fillet seal, and this type of sealing will be used in most cases for the repair of fuel tank leaks. Fillet seals are used to cover structural joints along stiffeners, tank walls and wing spars and to seal around fittings on tank walls and in corners. The dimensions shown in figure 5-26 represent typical finished fillet shapes for various applications. Fillets should conform to the dimensions as near as possible since the shape of a fillet determines its service life. The metal surface must be absolutely clean before a fillet seal will adhere properly.

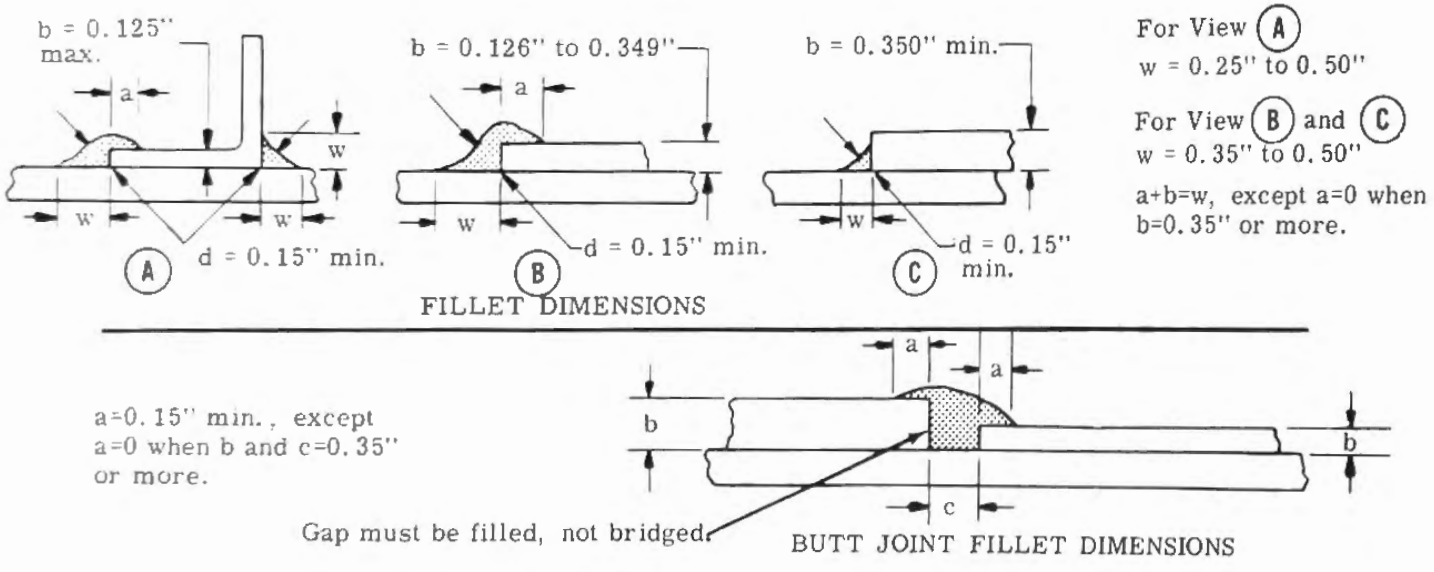

Figure 5-26. Fillet Dimensions - Integral Fuel Tanks

b. Faying Surface Seal. Faying surface seals are used in fuel tank sealing for several purposes. As primary seals (figure 5-27) they are used between surfaces where an absolute seal cannot be economically obtained by the use of sealed fasteners and fillets. A faying surface seal around a fastener acts to prevent the possibility of fuel reaching the fastener area. It does not entirely seal the fastener which must also be sealed. Faying surface seals are especially used to seal areas that will be hard or impossible to seal after assembly.

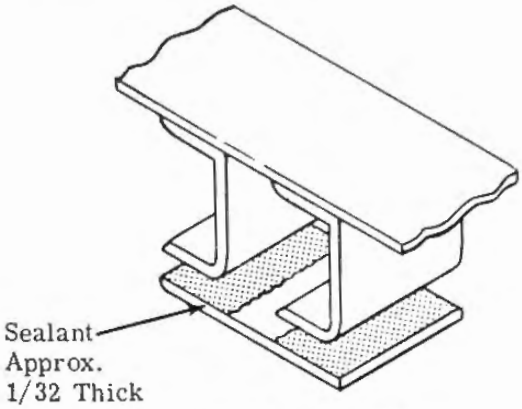

BEFORE ASSEMBLY

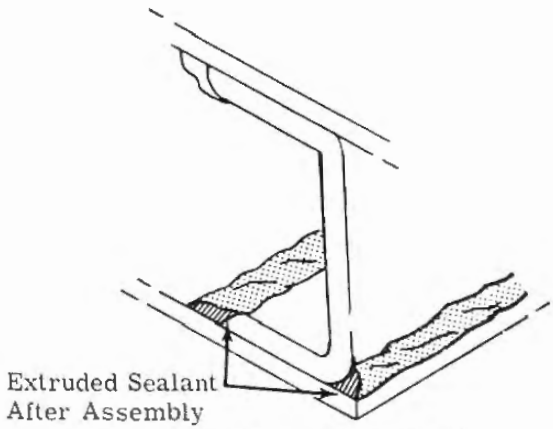

AFTER ASSEMBLY

Figure 5-27. Faying Surface Seal

c. Injection Seals. Hole, joggles, channels and other voids caused by buildup of structure in the fuel tank boundaries are normally filled by injection seals. Injection seals (figure 5-28) may be applied to provide continuity where fillet seals are interrupted by structure. Injection sealing acts to force air out of a cavity and to fill the vacant space with a solid block of sealant. Holes, joggles and channels along seams which are to be fillet sealed are also injected full of sealant to provide a backup seal to support the primary fillet seal.

d. Pre-Pack Seal. Pre-pack seals are used to fill voids in the tank structure which cannot be reached by the injection method. These voids are packed with sealant before they are closed by the assembly of structure members.

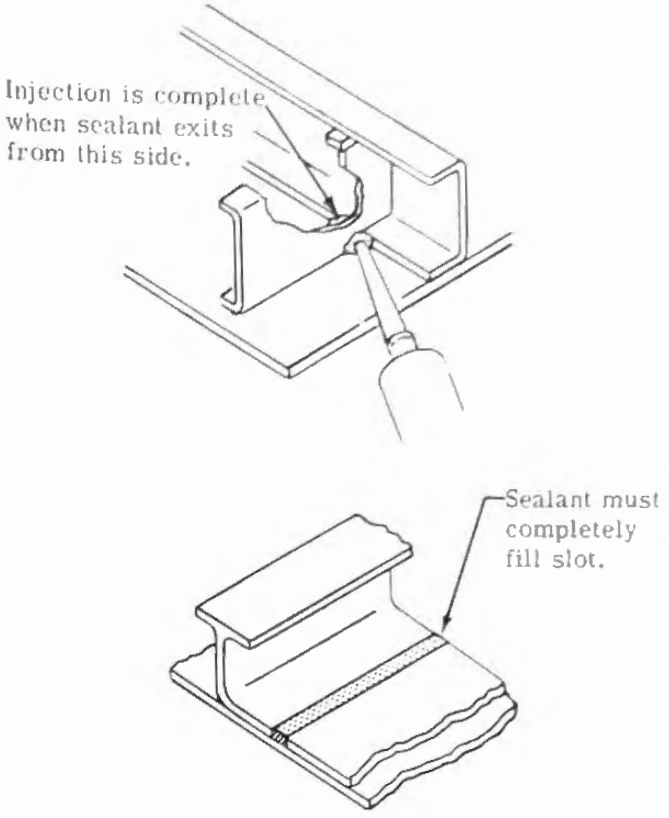

Figure 5-28. Injection Seals

e. Sealed Rivets. Rivets installed in the "wet" area of the tanks must be sealed. Sealing is accomplished by brush stroking in two directions to apply a coating of 0.005 to 0.015 inch thick. Tooling holes are plugged with soft rivets and then brush-coated with sealant.

f. Sealed Bolts. Sealant must be applied to prevent leakage around all bolts in the fuel tanks. Fillet seals as shown in figure 5-29 should be used.

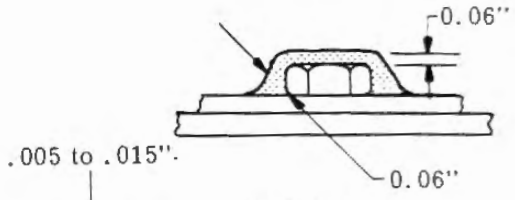

BOLT HEAD

RIVET

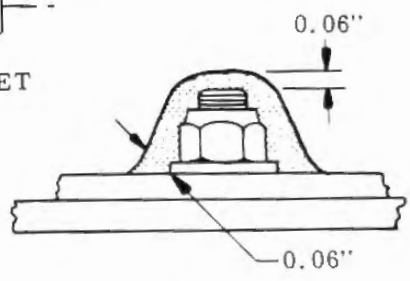

NUT AND THREAD

Figure 5-29. Sealing Bolts and Rivets

g. Dome Type Nutplates. Apply a fillet of sealant around the base of the fastener and over the attaching rivets. If necessary, the sealant may be worked with a tool to obtain a minimum thickness as shown in figure 5-30. Care must be taken to eliminate any visible voids or bubble areas around the nutplate base and especially between the rivet and the nutplate base.

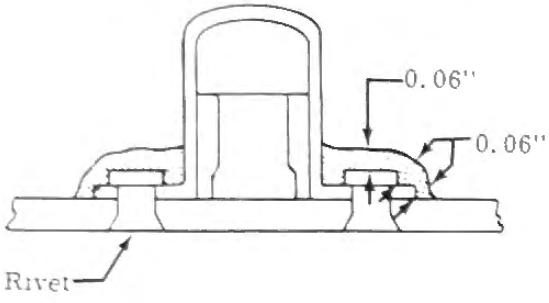

Figure 5-30. Sealing Dome Type Nutplates

METHODS OF APPLICATION.

a. Sealant material may be applied with a brush, an extrusion gun, or a spatula. Each method works best in a particular situation. The following paragraphs describe these methods and the situations in which they are used.

1. Brush application
   (a) A stiff bristled brush (not nylon) is used to apply the pre-coat of class A sealant. Sealant should be well brushed onto the surface and into the joint which is to be sealed.
2. Extrusion application
   (a) Fillet, faying surface and pre-pack seals may be applied with an extrusion gun. Injection seals must be applied with an extrusion gun. The extrusion gun uses air pressure to force the sealant material through a nozzle onto the surface or into the cavity to be sealed. Nozzles are available in different sizes to produce different sized beads of extruded sealant. The nozzle tips may be shaped locally to produce a bead of sealant with the shape and dimensions to fit a specific job.
3. Spatula application
   (a) A spatula is used to spread sealant material for faying surface and pre-pack seals. Small repair fillet seals may be applied with a spatula if an extrusion gun is not available.

INTEGRAL FUEL TANK SEALING - REPAIRS.

a. Before any sealant is applied, the leak path must be carefully analyzed to determine which seal, or seals, have failed. After the actual leak point is known, an effective method of repair can be decided upon. The following paragraphs describe the repair methods used in a few typical situations.

1. If leak path tracing procedures determine the actual leak point is a failed fillet or fastener seal, the correct repair is to remove and replace the faulty seal. All faulty sealant material must be cut away, surfaces thoroughly cleaned, and new sealant applied to produce a seal of the same size and shape as the original seal.
2. Raising the seal plane can be employed whenever leak path tracing procedures determine that the actual leak point is in a failed pre-pack or faying surface seal. The structure surrounding the failed seal must be carefully reviewed to determine the point to which the seal plane must be raised. The new seal plane must completely isolate the failed seal from fuel but the seal plane should not be raised any more than necessary to accomplish this. As an option, the failed pre-assembly seal may be replaced as directed in step (4). Raising the seal plane can involve an extensive amount of sealant addition so in many cases, structure removal and replacement of the failed seal will be the best action.
3. When removing a failed injection seal, all the sealant material must be removed through the injection channel. A satisfactory seal cannot be formed if the channel is not clear, since trapped air will prevent complete filling of the channel with sealant material. As an option, the failed injection seal may be repaired by raising the seal plane.
4. Replacing a failed pre-pack or faying surface seal involves disassembly of structure to gain access to the faulty seal.

EQUIPMENT AND MATERIALS.

Note

It is of primary importance that all equipment used for the application of sealing compound be kept clean at all times. It is particularly necessary to see that this equipment is cleaned thoroughly after completing each job.

a. Sealant removal and cutting tools (see figure 5-31)
   1. These tools should be made of hardwood to reduce the possibility of damaging the aircraft structure.
b. Fillet fairing tools (see figure 5-32)
c. Stiff bristle brushes (not nylon)
d. Clean white cotton cloth
e. Pipe cleaners
f. Solvent dispensers (polyethylene squirt bottles)
g. Sealant gun (Pyle No. 950) or equivalent - Pyle Industries Inc, Southfield, Michigan
h. Polyethylene nozzles for sealant gun
i. Polyethylene cartridges for sealant gun
j. Cleaning solvents
   1. APCO No. 10 Mineral Spirits or equivalent - Sherwood and Co, Inc, Wichita, Kansas
   2. Skellysolve - S or equivalent - Skelly Oil Co, Kansas City, Mo.
   3. Turco Seal Solvent or equivalent - Turco Products Inc, Kansas City, Mo.
k. Sealant
   1. Brushable sealing compound
      (a) Pro-Seal No. 890 Class A - Coast Pro-

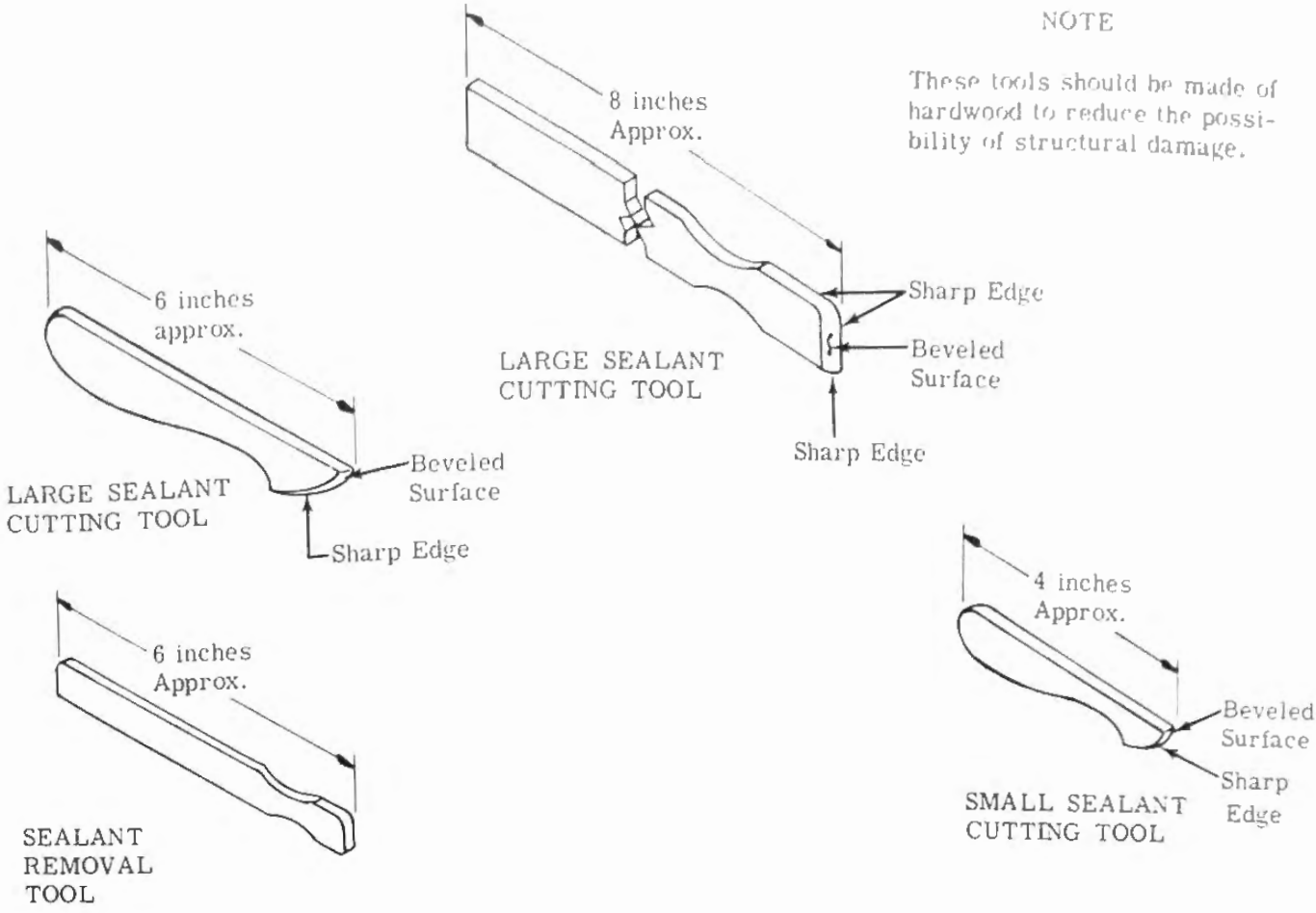

Figure 5-31. Sealant Removal and Cutting Tools

Seal and Manufacturing Co, Los Angeles, Calif.

2. Extrusion gun sealing compound
   (a) Material shall be procured from Coast Pro-Seal and Manufacturing Co. (Pro-Seal No. 890 Class B).
   (b) For minor repairs, a repair kit (Senkit 654) containing 6 ounces of sealant is available from The Lear Jet Corporation, Wichita, Kansas.
1. White cotton gloves.

MIXING SEALING COMPOUND. Brushable sealant (Type A) can be mixed in any quantity desired, but unless refrigeration facilities are available for storage, mix only as much as required for the work at hand. A balance scale with graduated weights should be available for mixing unless the small kits with the proper amount of accelerator and sealant in one package are used. All equipment used in the mixing process must be clean.

a. Place approximate amount of base compound to be used on scale and balance with weights.

b. Add to weights an additional amount of weight to give accelerator-to-base compound ratio as called out on manufacturer's sealant container.

c. Balance scale by adding accelerator, placing accelerator on top of base compound.

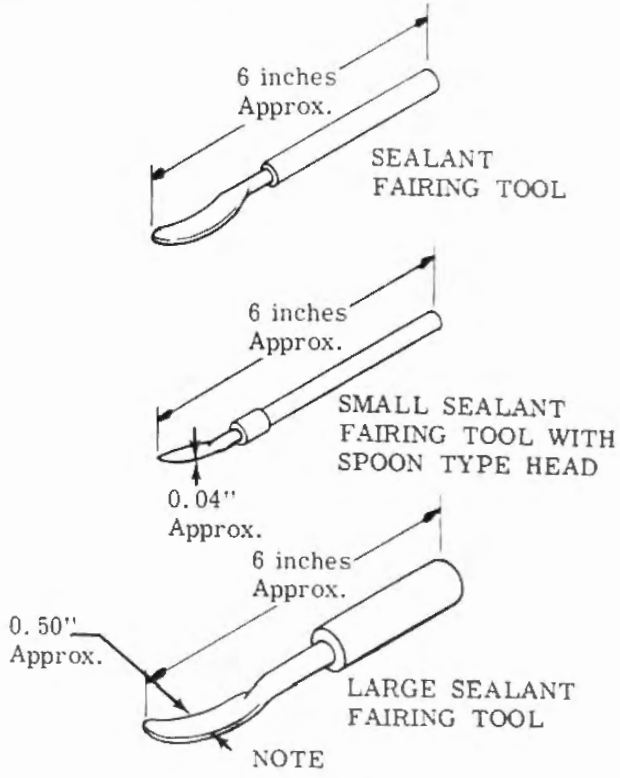

Figure 5-32. Sealant Fairing Tools

Note

Always use accelerator with base compound from same repair kit. Do not mix accelerator from one repair kit with base compound from another kit.

d. Thoroughly mix accelerator and base (minimum of 5 minutes) until sealant of solid uniform color is obtained.

CAUTION

Use care to avoid incorporating air into sealant during mixing process. Be sure that sealant is mixed until no streaks or areas of non-uniform color remain.

e. Place sealant in tube or can which has been cleaned with methyl ethyl ketone. Sealant is now ready for use.

CLEANING. Cleaning should be accomplished immediately prior to sealant application as follows:
a. Fold cotton cloth in such a manner to eliminate raw edges to reduce the possibility of lint.
b. Dampen the cloth with cleaning solvent from a polyethylene squirt bottle. The cloth should not be saturated to a point where the solvent drips.

WARNING

Special precautions should be observed during cleaning. Cleaning solvents are toxic and inflammable. Fresh air masks and or adequate ventilation should be available in all closed areas.

Note

Cleaning solvent shall never be poured or sprayed on the aircraft structure because the solvent may run back between structure layers, then creep back out again after cleaning operations are complete, bringing contamination to surfaces previously cleaned.

c. Thoroughly scrub the area to be sealed. Extreme care should be exercised to clean inaccessible corners, gaps, etc. A small paint brush or pipe cleaners may be used for these areas. Always clean an area larger than that required for the sealant.
d. Before the solvent has evaporated, wipe the area dry with a clean dry cloth.
e. Repeat steps c and d until no discoloration is evident on the drying cloth.
f. After the surfaces are thoroughly cleaned, personnel should wear clean white cotton gloves to prevent surface contamination.

GENERAL APPLICATION REQUIREMENTS.
a. Sealant shall not be applied at temperatures below 60° F or to structure that is below 60° F.
b. Sealant in the integral fuel tanks shall be applied over epoxy finish.
c. Sealed structure, other than faying surface seals, shall not be moved or handled until the sealant is tack-free.
d. Pressure testing shall not be performed until sealant is tack-free.

REPAIRING FILLET SEAL.
a. Remove faulty sealant.
1. Use sealant cutting tools similar to those shown in figure 5-31.
2. Cut faulty section from fillet as shown in figure 5-33. Slope cuts at ends of section so that new sealant will lap remaining portions of old fillet in these areas. Avoid abrupt changes in cross section.

Note

Remove enough sealant on both sides of defective area to be sure that remaining material is satisfactory.

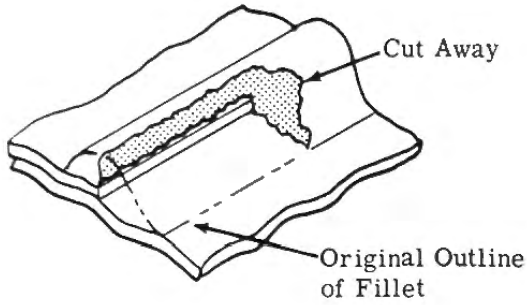

Figure 5-33. Fillet Seal Removal

3. Examine all cut surfaces. Remove loose cuts or flaps. Make sure that no faulty sealant remains. If fillet adhesion is good, it is not necessary to cut sealant down to bare metal.
b. Refinish damaged surface if necessary.
c. Clean surface to be sealed.

Note

If epoxy finish is removed during the cleaning operation, it is permissible to seal directly over the bare metal. Touch up exposed areas after the sealant has been applied.

d. Apply new fillet seal.
1. Prior to fillet sealing, all fasteners in the area to be sealed must be installed. All bolts must be torqued to their respective values as retorquing is not permitted after sealing. The proper nozzle for the sealing gun must also be used. If a small fillet is to be laid, use a small nozzle; a large fillet requires a large nozzle.
2. With extrusion gun, apply a small fillet of

Type B sealant as shown in figure 5-34.
3. When a nozzle tip is used, it shall be pointed into the seam and shall be maintained nearly perpendicular to the line of travel.

CAUTION

Sealant must be applied carefully to avoid trapping air in fillet. Operate gun so that a bead of sealant is continually forced ahead of nozzle tip in the direction of nozzle travel.

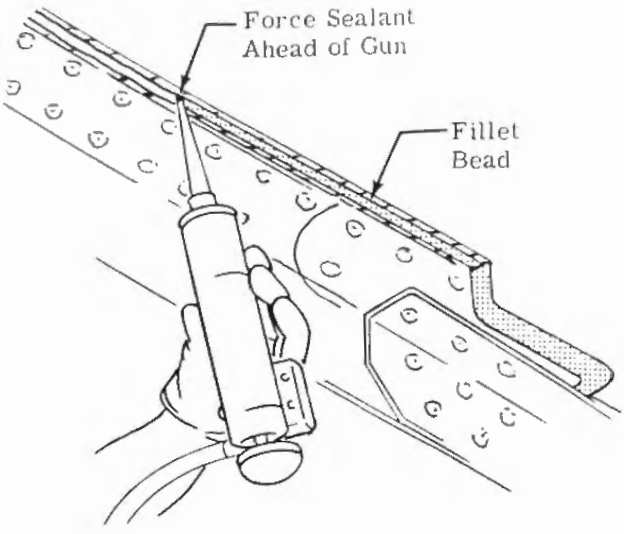

Figure 5-34. Application of First Fillet

4. Using a fillet fairing tool, press the first fillet firmly into position as shown in figure 5-35. Work the entire beaded section.

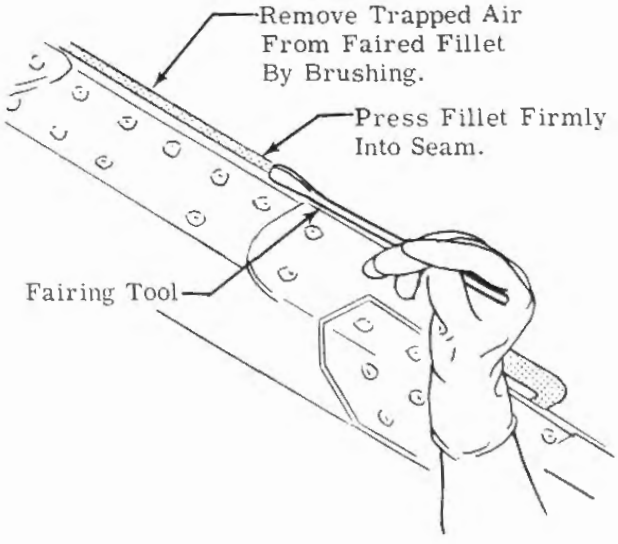

Figure 5-35. Pressing First Fillet Into Seam

CAUTION

Check that the fairing tool is absolutely clean. Use no solution or lubricant to make it slide smoothly over the sealant. Wipe the tool with clean gauze frequently to aid in the fairing operation.

5. If the first fillet has cured but is not clean, then it must be cleaned before the application of the second fillet.
6. Apply the second application of Type B sealant to produce a full bodied fillet as shown in figure 5-36. A larger nozzle will be required than was used for the first fillet. If an extruded nozzle head is used, make cuts in nozzle to fit fillet and make it conform to the dimensions given in figure 5-26. If extruded head nozzle is not used, use a fairing tool as required to make sealant conform to the full-bodied fillet dimensions.

Note

Keep the sealing gun nozzle right on the work to prevent inclusion of air bubbles between fillets. Do not hurry. Good sealant application requires patience as well as proper technique. If a fillet extrusion head is used, the head shall be pressed firmly against the part in such a position that the maximum thickness of the fillet will be directly over the edge.

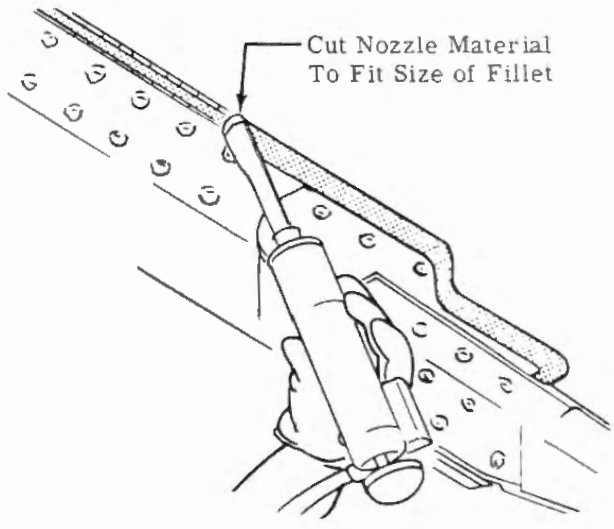

Figure 5-36. Application of Final Fillet

7. Work out any evident air bubbles.
8. Fillet re-entrant edges are not acceptable. (See figure 5-37.)
9. A typical finished fillet seal with dimensions is shown in figure 5-26.

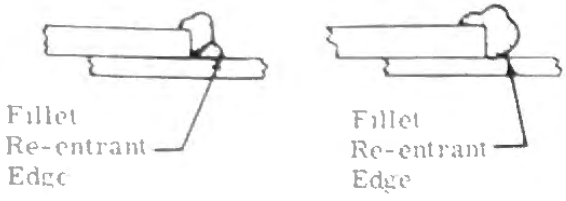

Figure 5-37. Re-Entrant Fillets

REPAIRING FILLET SEALED FASTENERS. Leaking fastener fillet seals are repaired by replacing the faulty sealant. Proceed as follows:

a. Using a sealant cutting tool, cut around seal at base of fastener to separate sealant from structure.

b. Grasp seal with pliers and pull up away from fastener end. Most of seal should be removed by this process.

c. Cut away remaining sealant with cutting tool. Small quantities of sealant which adhere firmly to fastener need not be removed.

Note

If bolt is being sealed, it must be torqued before applying sealant. Tightening during or after sealing is not allowed.

d. Clean fastener and surrounding area with cleaning solvent.

e. Using an extrusion gun or spatula, apply a coat of Type B sealant around and over fastener.

f. Work sealant with fairing tool until fillet seal dimensions given in figure 5-29 are obtained.

g. Use extreme care to eliminate any visible voids or bubble areas around the fastener base.

REPAIRING DOME TYPE NUTPLATES. Sealed nutplates that leak should be repaired by fillet sealing the nutplates and attaching rivets.

a. Clean the nutplate and the surrounding surface with cleaning solvent.

b. Using an extrusion gun or spatula, apply Type B sealant around nutplate and over rivet heads. (See figure 5-30.)

c. Work sealant with fairing tool to obtain fillet seal dimensions shown in figure 5-30.

d. Use extreme care to eliminate any visible voids or bubble areas around the base of the nutplate and especially between the rivet and nutplate base.

REPAIRING RIVET SEALS.

a. Clean the area to be sealed.

b. Apply Type A sealant over rivet butts and/or heads that are within the wet area. Sealant may also be applied on the structure. Apply by brushing in two directions until a coating of 5 to 15 mils thick is obtained. (See figure 5-29.)

c. Tooling holes on any new parts shall be plugged with a soft rivet and then brush coated with sealant.

REPAIRING INJECTION SEALS.

a. Repair failed injection seal by removing faulty sealant and applying a new injection seal or by raising seal plane to isolate faulty seal from fuel.

b. Remove faulty sealant.
   1. Remove sealant from short injection channels with a hooked wire and small cutting tools. Longer injection channels require disassembly of structure.
      (a) Clear injection channel all the way through since trapped air will prevent complete filling of the channel with sealant.
      (b) Exercise care so that structure is not damaged during the removal process.

c. Clean injection channel.
   1. The channel to be sealed must be absolutely clean. Proceed as follows:
      (a) Clean channel with cleaning solvent and pipe cleaners.
      (b) Apply solvent with saturated pipe cleaner or brush. Wipe surface dry with clean pipe cleaner. Repeat until drying cleaner remains clean.
      (c) Clean channel at least once more after visible evidence of impurities has been removed and the surfaces are clean.

d. Apply new injection seal.
   1. To apply a new injection seal, a fairing tool, pipe cleaners, and an extrusion gun with an injection nozzle attached are required.
      (a) Make sure channel is thoroughly cleaned.
      (b) Inject channel full from one end only with Type B sealant, until sealant emerges from all other openings. Completely fill joggles and channels that require continuity of seal or block off seal. (See figure 5-28.)

CAUTION

Be sure gun has enough sealant to make complete seal at one injection without any break, as stopping and starting will cause air bubbles in seal and is cause for rejection of repairs.

      (c) Remove excess sealant with a fairing tool and smooth out ends of seal.
      (d) Inspect finished repairs, checking for poor adhesion and air bubbles. Any air bubble is cause for rejecting a seal. Rework only area that has bubbles.
      (e) Check that the area where the sealant protrudes out into the fillet seal area has no abrupt changes in section. Sealant must be faired out gradually into the area that is to be fillet sealed.

REPAIRING PRE-PACK AND FAYING SURFACE SEALS.

a. Failed pre-pack and faying surface seals are normally repaired by raising the seal plane to isolate the failed seal from fuel. As an option, the structure

surrounding the faulty seal can be disassembled, a new seal applied and the structure reassembled.

b. To replace a failed pre-pack seal, proceed as follows:

1. Disassemble structure surrounding seal.
2. Remove all sealant from pre-packed cavity with sealant cutting tools and suitable plastic scrapers.
3. Complete all pre-assembly operations such as hole drilling and burring.
4. Clean parts with cleaning solvent.
5. Apply a coat of Type B sealant to one of the parts. Shape the sealant with a fairing tool to the general contours of the cavity.

Note

Sufficient sealant must be applied to insure complete filling of the cavity.

6. Assemble parts within sealant work life.

c. To replace a failed faying surface seal, proceed as follows:

1. Disassemble structure surrounding seal.
2. Remove all sealant from faying surfaces with sealant cutting tools and suitable plastic scrapers.
3. Complete all preassembly operations such as hole drilling and burring.
4. Refinish damaged surface.
5. Clean faying surfaces with cleaning solvent.
6. Apply a coat of Type B sealant to one faying surface with a roller, an extrusion gun, or a spatula. Spread the sealant over the entire surface to obtain a uniform coating.
7. Removable seals shall be applied with the use of a parting agent. The parting agent shall be applied to one surface. Paint shall be omitted from this surface when the parting agent is dry to the touch; the parts may be assembled with a faying surface seal. If the part is removed, the sealant shall be removed, new parting agent applied, and resealed.

Note

The parting agent is one part by weight of MIL-I-7444, vinyl tubing, dissolved in four parts of cyclohexanone. Do not apply this parting agent over paints, primers, or on acrylics.

8. Assemble parts within sealant work life.
9. Fair out extruded sealant to leave a smooth fillet along joint. (See figure 5-27.)

Note

Sufficient sealant must have been applied to insure a continuous extrusion on both sides of the joint after assembly of the faying surfaces.

SECTION VI
INSTRUMENTS

TABLE OF CONTENTS

Title	Page
Instruments	6-1
Instrument Panel	6-1
Instrument Markings	6-8
Readout Panel	6-8
Master Caution Light	6-8
Engine Instruments	6-8
Exhaust Temperature Indicating System	6-8
Engine Tachometer System	6-10
Fuel Flow Indicating System	6-10
Engine Pressure Ratio Indicating System	6-10
Oil Pressure Indicating System	6-11
Oil Temperature Indicating System	6-11
Pitot Static System	6-12
Flight Instruments	6-16
Airspeed Indicator	6-16
Machmeter	6-16
Airspeed and Mach Indicator	6-16
Mach Warning System	6-16
Turn and Bank Indicator	6-16
Rate of Climb Indicator	6-16
Altimeter	6-16
Magnetic Compass	6-16
Flux Valve Calibration - Directisyn	6-17
Miscellaneous Instruments	6-18
Clock	6-18
Fuel Quantity Gage	6-18
Flap Position Indicator	6-18
Ram Air Temperature Gage	6-18
Cabin Air Pressure Indicator	6-18
Cabin Altimeter	6-18
Oxygen Pressure Gage	6-18
AC Voltmeter	6-18
DC Voltmeter	6-18
Ammeters	6-18
Emergency Air Pressure Gage	6-18
Hydraulic Pressure Indicator	6-18
Hydraulic Pressure Gage	6-18
Roll Trim Position Indicator	6-18
Yaw Trim Position Indicator	6-18
Pitch Trim Position Indicator	6-18
Position Indicator Calibration Assembly	6-18
Calibration of Position Indicators	6-19

INSTRUMENTS. The instruments are divided into three groups: engine, flight, and miscellaneous.

CAUTION

Disassembly or overhaul of instruments should be performed only in approved shops by authorized personnel.

When removing instruments, plug all hoses and cap all fittings to prevent the entry of foreign matter. When installing instruments, lubricate the straight threads with TT-A-580 anti-seize compound and the tapered threads with JAN-A-669 anti-seize compound.

INSTRUMENT PANEL. (See figure 6-2.) The Lear Jet instrument panel consists of five separate sub-

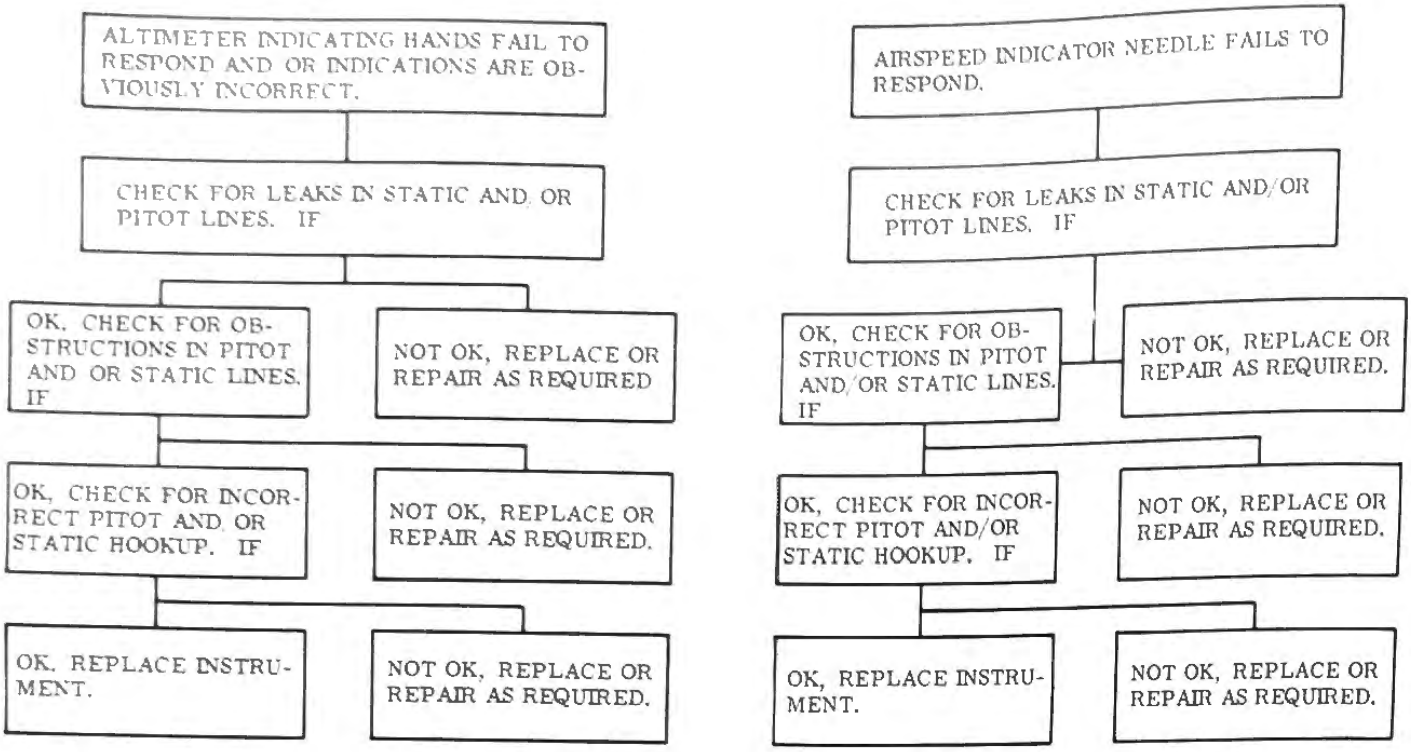

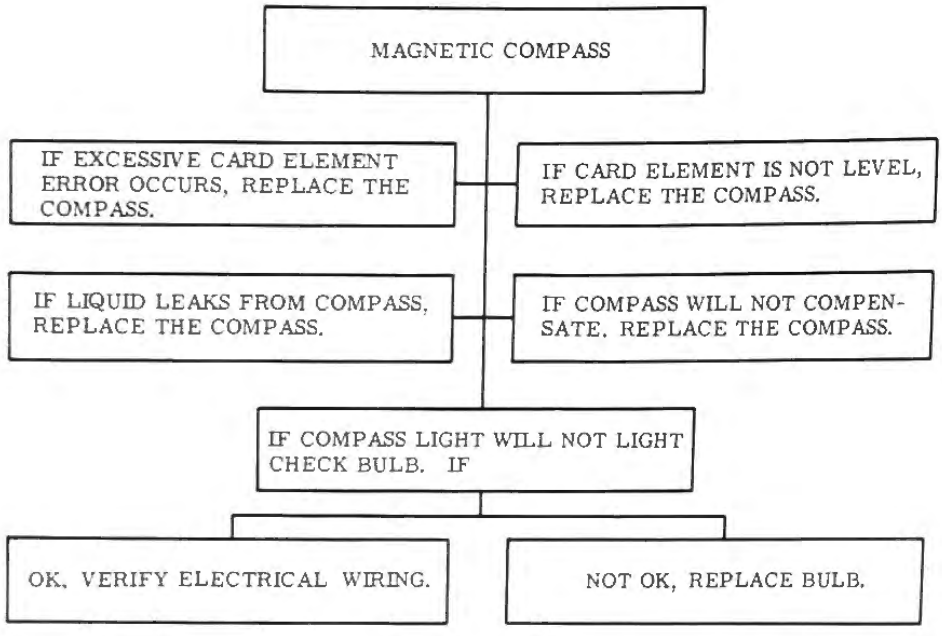

Figure 6-1. Trouble Shooting Chart - Instruments (Sheet 1 of 2)

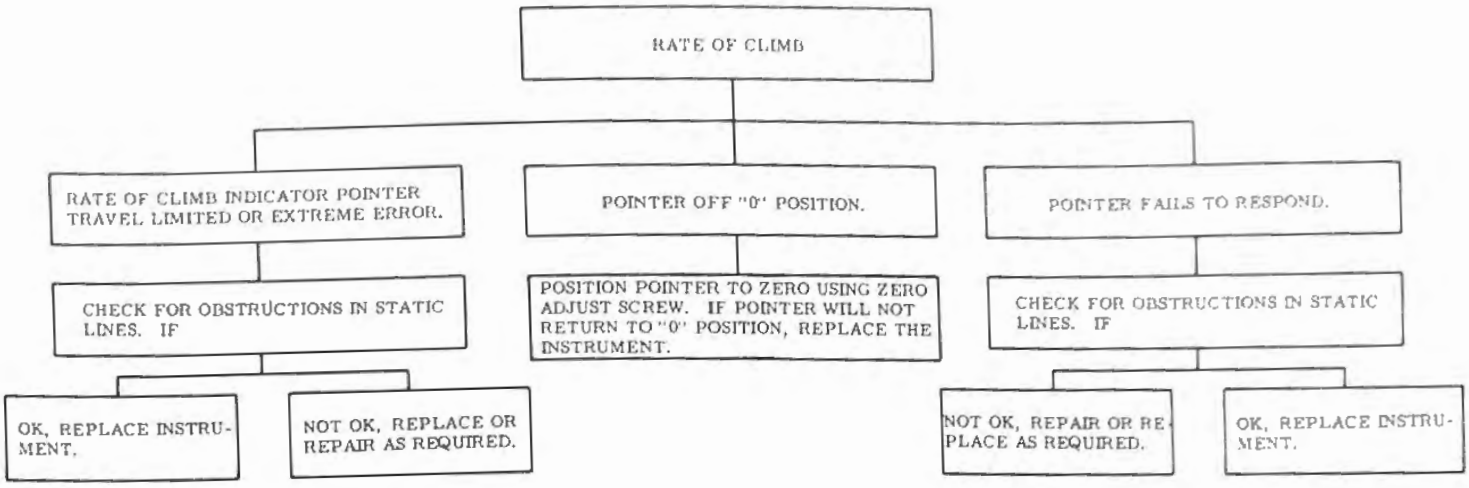

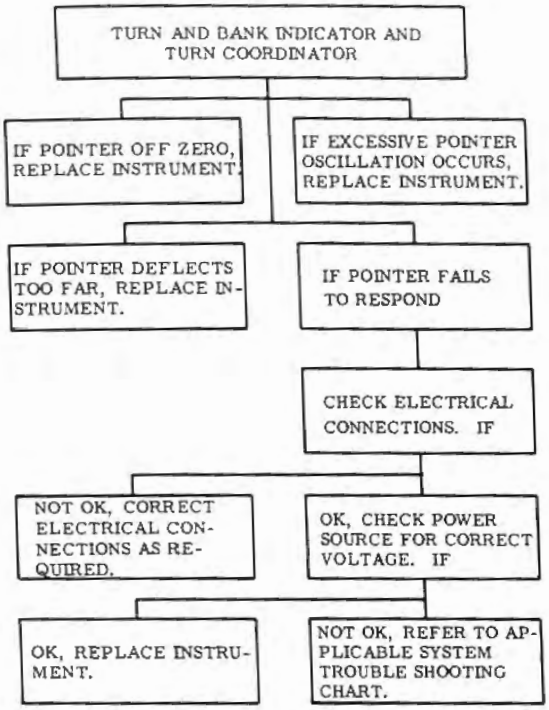

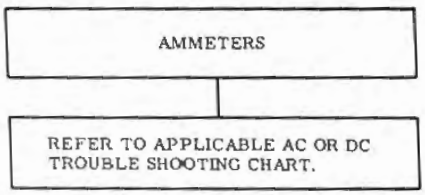

Figure 6-1. Trouble Shooting Chart - Instruments (Sheet 2 of 2)

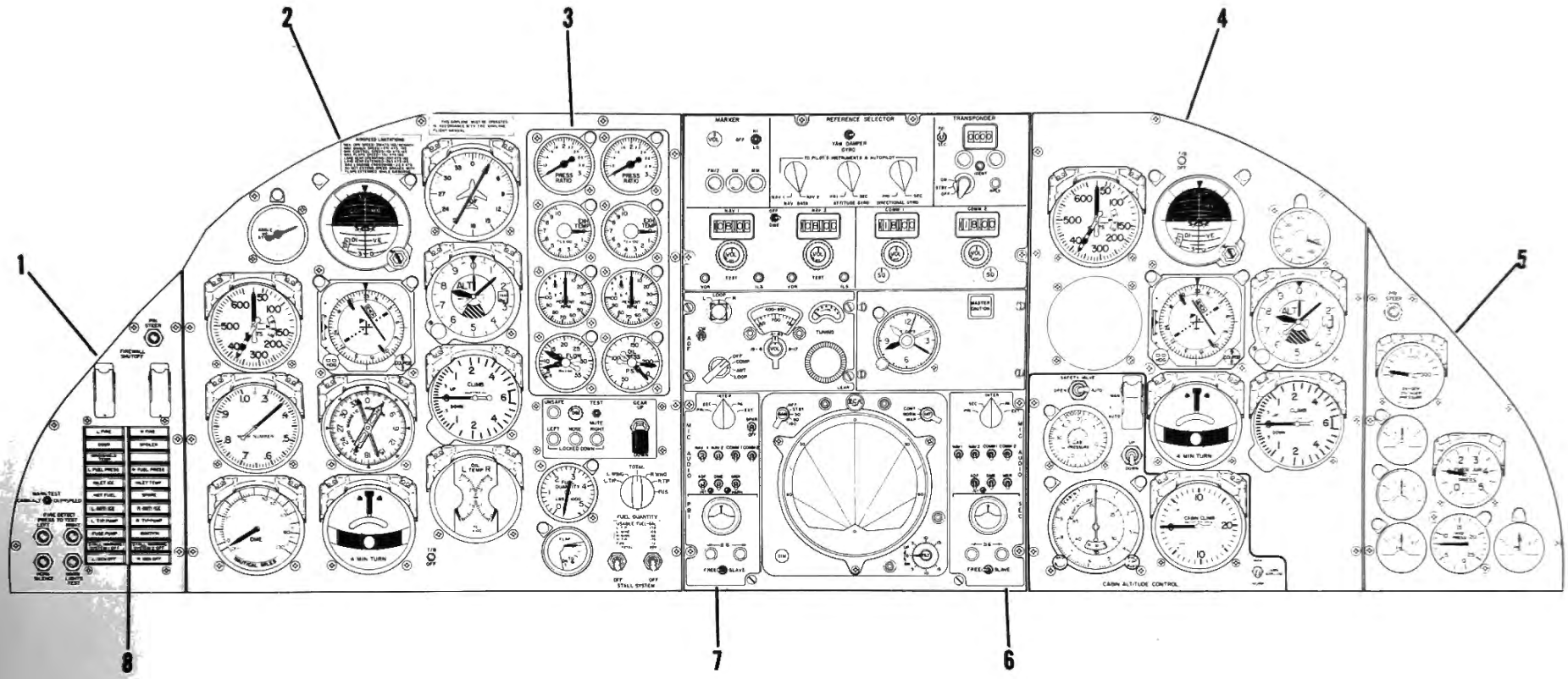

Figure 6-2. Instrument Panel (Sheet 1 of 4)

1. Pilot's Sub-Panel
2. Pilot's Flight Panel
3. Engine Gage Panel
4. Copilot's Flight Panel
5. Copilot's Sub-Panel
6. Copilot's Radio Panel
7. Pilot's Radio Panel
8. Readout Panel

Aircraft 23-003 thru 23-014.

Aircraft 23-015 thru 23-017

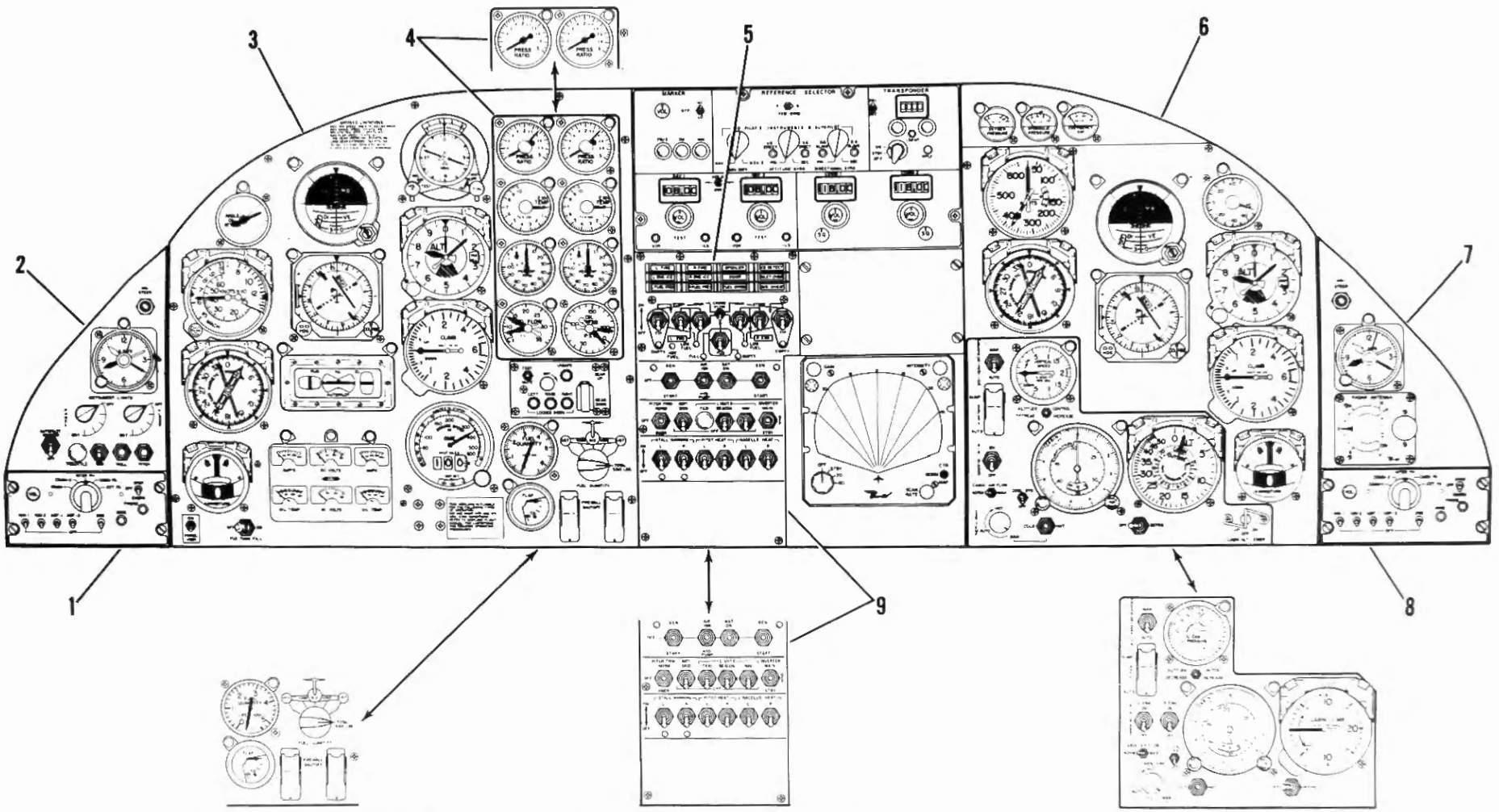

Aircraft 23-015 thru 23-024

Aircraft 23-015 thru 23-027

Aircraft 23-015 thru 23-029

1. Pilot's Radio Panel
2. Pilot's Sub-Panel
3. Pilot's Flight Panel
4. Engine Gage Panel
5. Readout Panel
6. Copilot's Flight Panel
7. Copilot's Sub-Panel
8. Copilot's Radio Panel
9. Switch Panel

Aircraft 23-015 thru 23-039

Figure 6-2. Instrument Panel (Sheet 2 of 4)

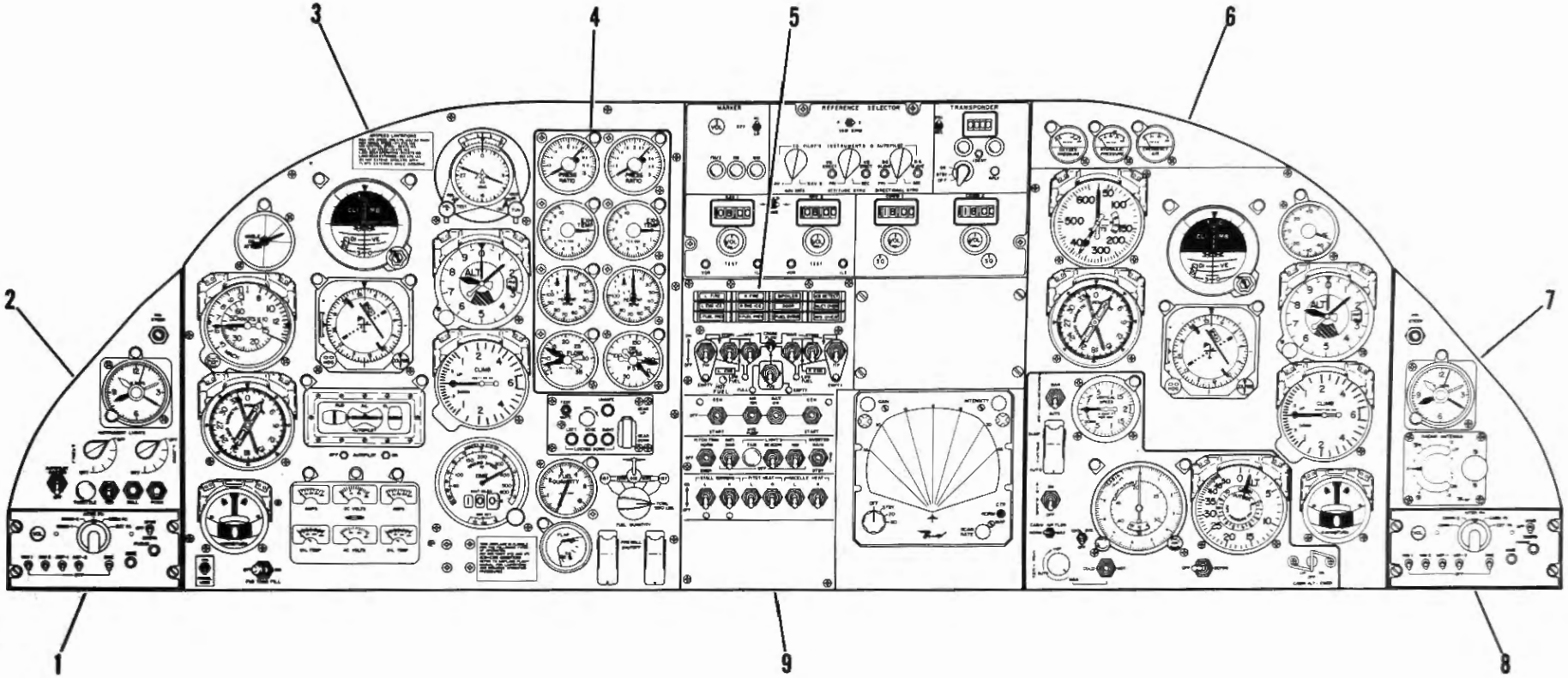

Figure 6-2. Instrument Panel (Sheet 3 of 4)

1. Pilot's Radio Panel
2. Pilot's Sub-Panel
3. Pilot's Flight Panel
4. Engine Gage Panel
5. Readout Panel
6. Copilot's Flight Panel
7. Copilot's Sub-Panel
8. Copilot's Radio Panel
9. Switch Panel

Aircraft 23-040 thru 23-069

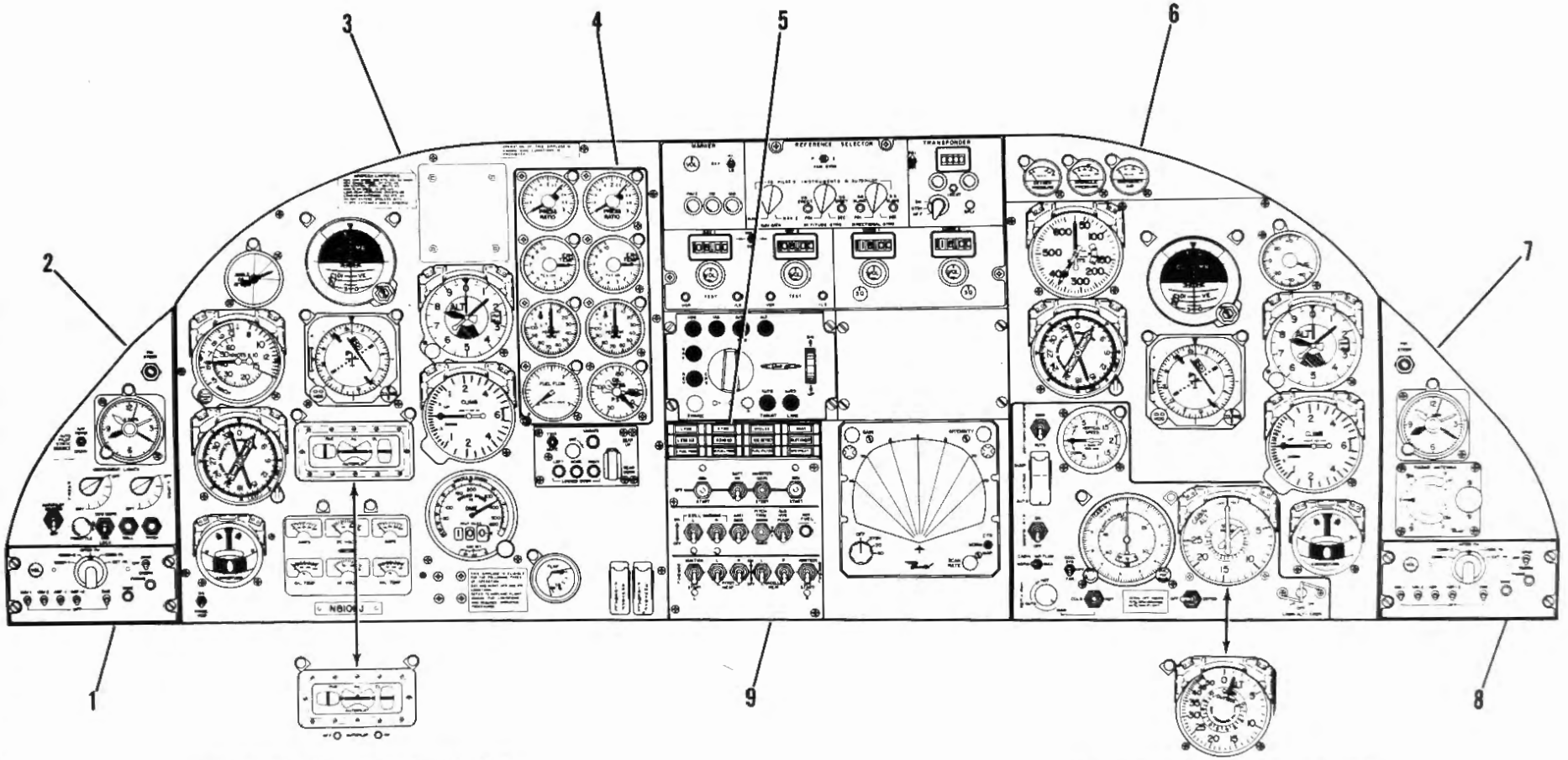

Figure 6-2. Instrument Panel (Sheet 4 of 4)

Aircraft 23-070 thru 23-091

Aircraft 23-070 thru 23-093

1. Pilot's Radio Panel
2. Pilot's Sub-Panel
3. Pilot's Flight Panel
4. Engine Gage Panel
5. Readout Panel
6. Copilot's Flight Panel
7. Copilot's Sub-Panel
8. Copilot's Radio Panel
9. Switch Panel

Aircraft 23-070 thru 23-099

panels: pilot's sub-panel, pilot's flight panel, radio panel, copilot's flight panel, and copilot's sub-panel. Each sub-panel is easily removed for inspection and maintenance. The pilot's and copilot's flight panels are hinge-mounted and may be lowered for access.

CAUTION

Prior to lowering either flight panel for maintenance, assure that the stall shaker switches are off.

INSTRUMENT MARKINGS. (Refer to figure 6-3.)

READOUT PANEL. (See figure 6-4.) A readout panel consisting of [A] 22 ([B] 12) warning lights is located on the instrument panel. The lights give a condition indication of various aircraft system. Refer to Section IX for wiring diagram.

MASTER CAUTION LIGHT [A]. (See figure 6-2.) The master caution light is located on the instrument panel just to the right of the clock. The light is installed to call the crew's attention to an unsafe indication on the readout panel and may be reset by pressing the indicator. Refer to Section IX for wiring diagram.

ENGINE INSTRUMENTS. (See figure 6-2.) The dual engine instruments are grouped on the engine gage panel which is conveniently located on the upper right side of the pilot's flight panel.

EXHAUST TEMPERATURE INDICATING SYSTEM. (Refer to Section IX for wiring diagram.) There is an identical exhaust temperature indicating system for each engine. Each system consists of an exhaust temperature indicator, a thermocouple spool resistor, and eight harness-mounted bayonet-type chromel-alumel thermocouples. The thermocouples are mounted at two different immersion depths in each engine tailpipe. The resistors are located in the aft fuselage between frames 25 and 26.

a. Operation. The thermocouples, heated by the exhaust gas, generate a small amount of electricity which is applied to the indicators by the chromel and alumel leads. The resistors are located in the alumel side of the circuit. The indicators are sensitive millivoltmeters with dials graduated from 0 to 900 degrees Centigrade. They provide the pilot with visual indications of the existing average tailpipe temperature within each tailpipe.

ADJUSTING AND TESTING EXHAUST TEMPERATURE INDICATING SYSTEM. When any element in the exhaust gas temperature indicating circuit is

EMERGENCY AIR GAGE
a. Green Arc - 1800 to 3000 psi
b. Red Line - 3000 psi

TACHOMETER
a. Green Arc - 47.0% to 100%
b. Yellow Arc - 100% to 101%
c. Red Line - 101.2%

OIL PRESSURE GAGE
a. Green Arc - 5 to 50 psi
b. Red Line - 4 and 51 psi
c. Red Arc - 0 to 5 psi

OIL PRESSURE GAGE [C]
a. Green Arc - 5 to 60 psi
b. Red Line - 4, 61 and 70 psi
c. Red Arc - 0 to 5 psi

EXHAUST GAS TEMPERATURE GAGE
a. Green Arc - 200° to 677°
b. Yellow Arc - 677° to 704°
c. Red Line - 704° and 950°

HYDRAULIC PRESSURE GAGE
a. Green Arc - 1250 to 1500 psi
b. Yellow Arc - 0 to 500 psi
c. Red Line - 1750 psi

OXYGEN PRESSURE GAGE
a. Green Arc - 1550 to 1850 psi
b. Yellow Arc - 0 to 300 psi
c. Red Line - 2000 psi

MACHMETER
a. Red Line - .82

AMMETER
a. Red Line - 400 amps

AC VOLTMETER
a. Green Arc - 110 to 130 volts

PITCH INDICATOR
a. Green Arc - 2° to 4°

OIL TEMPERATURE GAGE
a. Green Arc - 0° to 184°
b. Red Line - 185°

AIRSPEED INDICATOR
a. Red Line - 358 knots

DC VOLTMETER
a. Red Line - 35 volts

TRIM TAB
a. Green Bar - Second to third graduation up from the DN position.

Figure 6-3. Instruments Markings

[A] Aircraft 23-003 thru 23-014.
[B] Aircraft 23-015 thru 23-099.
[C] Aircraft 23-003 thru 23-099 modified by SK23-197.

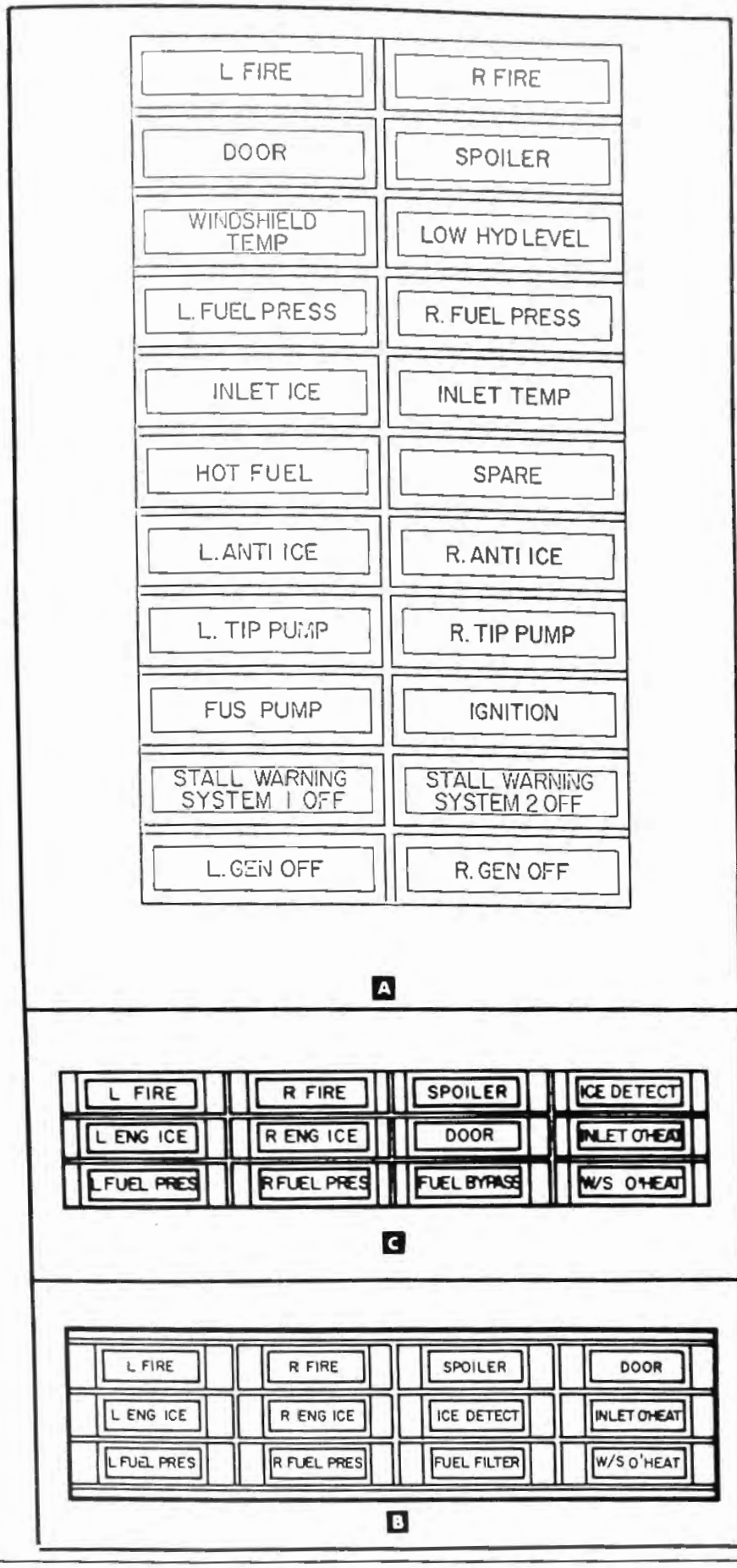

A Aircraft 23-003 thru 23-014 **B** Aircraft 23-015 thru 23-069 **C** Aircraft 23-070 thru 23-099

Figure 6-4. Readout Panel

changed or if an engine is replaced, the exhaust temperature circuit resistance shall be tested and, if necessary, adjusted. It is recommended that a Jetcal Analyzer be used for testing. For required engine temperatures versus engine rpm, refer to Engine Maintenance Manual (SEI-136).

ENGINE TACHOMETER SYSTEM. (Refer to Section IX for wiring diagram.) The engine tachometer system consists of a tachometer generator, mounted on the rear of each engine-driven lube pump housing, and the tachometer indicators on the instrument panel.

a. Operation. Engine rotation operates the three-phase AC tachometer generator which generates power to operate the tachometer indicators. Each indicator is a synchronous motor operating a magnetic drag element coupled to two pointers. The pointers indicate the synchronous motor speed and therefore the engine rpm. Dial markings are based on percent of maximum allowable engine speed. The large dial is graduated in 2% increments from 0% to 100%; the small dial is graduated in 1% increments from 0% to 10%. Using the small dial for the last 10%, the maximum indicator reading is 110%. No adjustment should be attempted. In case of malfunction, replace defective component.

FUEL FLOW INDICATING SYSTEM **A**. (Refer to Section IX for wiring diagram.) The aircraft fuel flow indicating system consists of a fuel flow transmitter (figures 5-4 and 5-5) located on each engine, downstream of the engine-driven fuel pump, and one indicator with dual pointers. The pointers are decaled L and R.

a. Operation. The transmitter measures fuel flow by means of a swinging vane which is prevented from rotating by a calibrated spring. Vane position is converted to electrical signals by movements of a ring magnet. The electrical signals are applied to the indicator electrical windings. Variations in electrical fields position the pointers which indicate the fuel flow in pounds per hour. System power is 26 vac, 400 cycles, supplied through a 2.5-ampere circuit breaker. No system adjustment should be attempted. In case of malfunction, replace defective component.

FUEL FLOW INDICATING SYSTEM **B**. (Refer to Section IX for wiring diagram.) The fuel flow indicating system consists of a fuel flowmeter (figures 5-4 and 5-5) located on each engine, downstream of the engine-driven fuel pump; a fuel monitor printed circuit board; an indicator; and a selector switch.

a. Operation. The flowmeters measure fuel flow by means of a rotor-turbine assembly in each engine flow line. An increase in fuel flow causes the rotor-turbine assembly speed to increase or decrease. A pickup coil sensing device converts any change in electromagnetic flux caused by the rotating rotor-turbine assembly into alternating voltage. These alternating voltages are applied to the fuel monitoring circuit and converted into DC electrical signals. The DC electrical signals are applied to the fuel flow indicator through a selector switch labeled L and R. The system is powered by 28 vdc supplied through a 2.5-ampere circuit breaker. In case of malfunction, refer to FUEL FLOW INDICATOR CALIBRATION, this section.

FUEL FLOW INDICATOR CALIBRATION **B**. (See figure 6-5.) This adjustment is for aircraft equipped with Fuel Flow Indicator Assembly (P/N 2308126-1). Adjust the indicator assembly as follows:

Note

The indicator assemblies have both a jumper wire and resistor installed between points A and B.

a. With a voltage of 0.277 (±0.05) vdc applied across terminals (+) and (-), adjust potentiometer for deflection of 700 pounds per hour indicator reading.

b. If proper scale deflection cannot be obtained, clip the jumper wire and repeat step a.

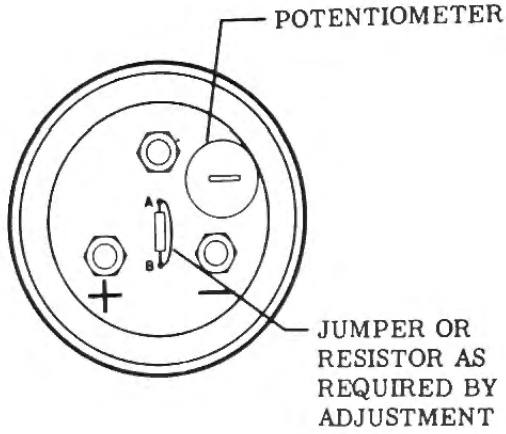

Figure 6-5. Fuel Flow Indicator Calibration

ENGINE PRESSURE RATIO INDICATING SYSTEM. (See figure 6-6.) The pressure ratio indicating system provides engine pressure ratio readings to the pilot. The system for each engine consists of engine exhaust inlet probes in the engine tailcone, two transducers in the aft fuselage, an EPR indicator on the engine gage panel, and the pitot assembly located in the dorsal fin air inlet. The pitot assembly is common to both engines. Drain plugs are located in the system for draining any condensation.

a. Operation. One transducer senses engine exhaust pressure and the other senses dorsal inlet air pressure. The ratio of these two pressures is amplified within the transducers with the resultant electrical

A Aircraft 23-003 thru 23-069 except aircraft modified by SK23-180A.
B Aircraft 23-070 thru 23-099 and aircraft modified by SK23-180A.

signals being applied to the EPR indicator. System power is 26 vac, 400 cycles, supplied through a 2.5-ampere circuit breaker. No system adjustment should be attempted. In case of malfunction, replace defective component. Refer to Section IX for wiring diagram.

OIL PRESSURE INDICATING SYSTEM. (Refer to Section IX for wiring diagram.) The oil pressure indicating system consists of an oil pressure transmitter on each engine and a single oil pressure gage, with dual pointers, on the engine gage panel. The pointers are decaled L and R.

a. Operation. The transmitter contains a pressure element which senses oil pressure through a pressure line. This signal, after amplification, imparts a rotary motion to the shaft of a small, highly precise synchro motor. The motor shaft movement produces an electrical signal which is transmitted to the remote pressure indicators. System power is 26 vac, 400 cycles, supplied through a 2.5-ampere circuit breaker.

OIL TEMPERATURE INDICATING SYSTEM. (Refer to Section IX for wiring diagram.) The oil temperature indicating system consists of a resistance-type temperature bulb in each oil tank and a [A] dual indicator ([B] individual indicators) on the engine gage panel. The indicator has a range from 0° to 300° C and is powered by 28 vdc. See figure 6-3 for range markings.

[A] Aircraft 23-003 thru 23-014.
[B] Aircraft 23-015 thru 23-099.

1. Inlet Probe
2. Drain
3. Drain
4. Transducer (PT_2) RH
5. Transducer (PT_2) LH
6. Drain
7. Transducer (PT_5) RH
8. Transducer (PT_5) LH

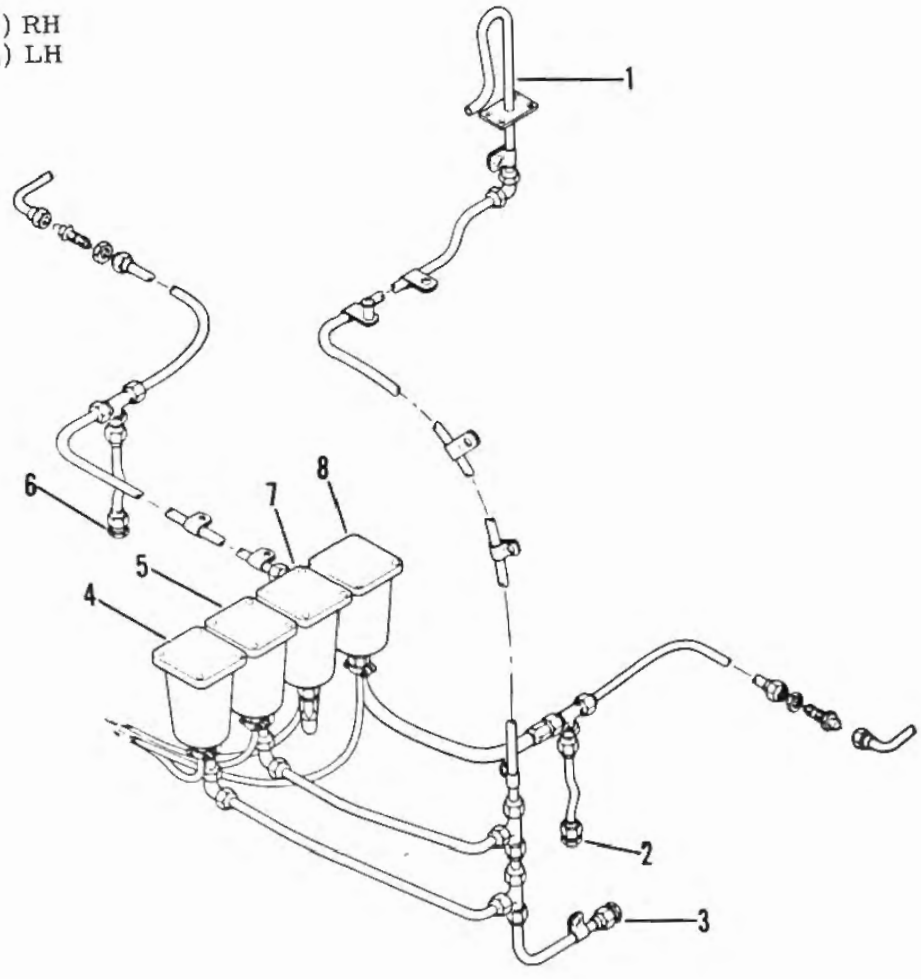

Figure 6-6. Engine Pressure Ratio Indicating System

PITOT STATIC SYSTEMS. (See figures 6-7, 6-7A, and 6-8.)

a. Pitot Heads. Pitot pressure is obtained from two pitot heads, one located on each side of the nose compartment. Each pitot head is equipped with an electrical heating element to prevent moisture from freezing and obstructing the heads. The heaters are controlled by the pitot heat switch located on the switch panel. On aircraft A, manual drain valves are installed in the pitot lines just forward of frame 5 to drain any accumulation of water in the lines.

b. Static Ports. Static pressure is sensed from B seven (C eight) static ports. On aircraft A, manual drain valves and static port heaters are installed. The static port heaters are energized when the battery switch is set to ON. The static ports perform the following functions:

1. The RH center and LH forward static ports are interconnected and supply static pressure to the copilot's instruments. On aircraft A, the static ports supply the pilot's instruments.
2. The RH forward and LH aft static ports are interconnected and supply static pressure to the pilot's instruments. On aircraft A, the static ports supply the copilot's instruments.
3. The RH aft static port supplies static pressure to the cabin air exhaust control valve. An alternate static port, installed in the nose compartment, supplies static pressure in case foreign objects should obstruct the RH aft port.
4. D The RH lower center static port supplies static pressure to the cabin safety valve. On aircraft E, the cabin safety valve static source is located in the tailcone equipment section.
5. B The static source, located in the tailcone equipment section, supplies static pressure to the autopilot altitude controller. A manual valve is installed to drain any condensate from the system.
6. C Two shoulder static ports, installed forward of the windshield halves supply static pressure to the autopilot altitude controller. Manual or solenoid operated drain valves are installed to drain accumulations of moisture. The solenoid valve is controlled by the autopilot static source switch.
7. F A union installed in frame 5 serves as the static port for the operation of the cabin emergency altitude control valve.

c. G Instrument Alternate Static Source. The instrument alternate static source consists of a manual control valve mounted on the lower edge of the instrument panel, a union installed in frame 5 which acts as a static port, and the hoses connecting the union and control valve to the instrument static system. The alternate static source acts as a backup should blockage of the primary static ports or tubes occur. The system provides static pressure to the pilot's instruments only. Setting the valve handle to OPEN supplies static pressure from the nose compartment to the pilot's instruments through the union-type static port and the control valve. The control valve handle, when not in use, is safety wired in the CLOSED position with breakaway safety wire.

PITOT SYSTEM LEAKAGE CHECK.

a. Assure that all pitot lines are secure and the pitot instruments are securely connected.

b. Using a suitable source of pressure and a test unit, install the test unit boot over the LH pitot head, making sure the drain hole is covered.

c. Apply pressure slowly until the pilot's airspeed indicator indicates 450 knots. Rate of pressure increase shall not increase the airspeed indicator in excess of 20 knots per second. The maximum pressure shall not exceed 6 psi. Quickly block off pressure source.

CAUTION

Apply only pressure (not vacuum) to pitot lines.

d. Leakage rate should not exceed 5 knots in 1 minute.

e. Release pressure slowly and remove test unit, checking that pitot head is clear of obstructions.

f. Repeat above procedure utilizing RH pitot head and copilot's airspeed indicator.

PITOT SYSTEM OPERATIONAL CHECK. The difference between the pilot's and copilot's airspeed indicator shall not exceed 5 knots while maintaining a constant speed within a range of 80 to 140 knots and not exceed 9 knots while maintaining a constant speed within a range of 150 to 400 knots.

STATIC SYSTEM LEAKAGE CHECK. A leakage check of the individual static systems is performed as follows:

a. Instrument Static Lines.

Note

The following procedure is applicable for either the pilot's or copilot's static systems. Check the static systems individually.

1. Assure that all instruments and lines are securely connected and all drain lines are tightly capped.
2. Attach a vacuum source to one static port (either LH or RH) while blocking the remaining static port.

A Aircraft 23-003 thru 23-025 except aircraft modified by SK23/24-226.
B Aircraft 23-026 thru 23-069 except aircraft modified by SK23/24-226.
C Aircraft 23-070 thru 23-099 and aircraft modified by SK23/24-226.
D Aircraft 23-003 thru 23-099 except aircraft modified by SK23/24-238.
E Aircraft 23-003 thru 23-099 when modified by SK23/24-238.
F Aircraft 23-030 thru 23-099.
G Aircraft 23-003 thru 23-099 when modified by SK23/24-282.

Learjet Temporary Service Manual Revision

MANUAL AFFECTED: Gates Learjet Models 23, 24, 24B, 24D/E/F and 25 Service Manuals.

FILING INSTRUCTIONS: Insert as listed below and retain until further notice.

Model 23	- Insert adjacent to page 6-12.
Model 24	- Insert adjacent to page 6-8.
Model 24B	- Insert adjacent to page 6-8.
Model 24D/E/F	- Insert adjacent to page 6-12.
Model 25	- Insert adjacent to page 6-11.

REASON: To add general maintenance practices to avoid damage to the pitot-static related instruments during testing.

INSTRUCTIONS: Add the following text.

PITOT STATIC SYSTEM MAINTENANCE PRACTICES:

a. When performing static system leak check, it will be necessary to apply vacuum to both the pitot and static systems simultaneously. This will prevent severe pressure differential which could cause instrument damage. Pressure in the pitot system must always be equal to or slightly greater than in the static system.

b. Whenever a pitot or static line is disconnected, all exposed fittings should be capped or plugged.

c. All pitot and static line B-nuts incorporate a fitting seal. Each time a line is disconnected, a new fitting seal must be installed.

d. Pitot system leak check should be performed and all leaks repaired prior to performing static leak check.

e. Pitot and static system leak checks should be performed at the intervals specified in Section VIII as well as anytime an instrument is replaced or a connection is loosened. All maintenance and inspections should be completed prior to performing leak checks.

f. Use of the system schematic is recommended to prevent application of reverse pressure and help determine the location of leaks.

g. Test equipment should be checked for leaks prior to use.

h. The rate of pressure change or the pressure applied should not exceed the design limits of the instruments.

April 7, 1978

STATIC PRESSURE p IN INCHES OF MERCURY FOR VALUES OF PRESSURE ALTITUDE H IN GEOPOTENTIAL FEET

Pressure altitude, H geopotential feet	0	100	200	300	400	500	600	700	800	900
-1,000	31.0185									
-0		30.0295	30.1382	30.2471	30.3563	30.4659	30.5758	30.6860	30.7965	30.9073
0	29.9213	29.8133	29.7056	29.5983	29.4913	29.3846	29.2782	29.1721	29.0663	28.9608
1,000	28.8557	28.7508	28.6463	28.5421	28.4382	28.3345	28.2312	28.1282	28.0255	27.9231
2,000	27.8210	27.7193	27.6178	27.5166	27.4157	27.3151	27.2148	27.1148	27.0151	26.9158
3,000	26.8167	26.7179	26.6193	26.5211	26.4232	26.3256	26.2283	26.1312	26.0345	25.9380
4,000	25.8418	25.7459	25.6504	25.5550	25.4600	25.3653	25.2708	25.1767	25.0828	24.9892
5,000	24.8959	24.8029	24.7101	24.6177	24.5255	24.4336	24.3419	24.2506	24.1595	24.0687
6,000	23.9782	23.8880	23.7980	23.7083	23.6189	23.5297	23.4409	23.3523	23.2639	23.1759
7,000	23.0881	23.0006	22.9133	22.8263	22.7396	22.6532	22.5670	22.4811	22.3954	22.3100
8,000	22.2249	22.1401	22.0555	21.9711	21.8871	21.8033	21.7197	21.6364	21.5534	21.4706
9,000	21.3881	21.3058	21.2238	21.1421	21.0606	20.9793	20.8983	20.8176	20.7371	20.6569
10,000	20.5769	20.4972	20.4177	20.3385	20.2595	20.1808	20.1023	20.0241	19.9461	19.8684
11,000	19.7909	19.7136	19.6366	19.5599	19.4834	19.4071	19.3310	19.2553	19.1797	19.1044
12,000	19.0293	18.9545	18.8799	18.8055	18.7314	18.6575	18.5839	18.5105	18.4373	18.3644
13,000	18.2917	18.2192	18.1470	18.0749	18.0032	17.9316	17.8603	17.7892	17.7184	17.6477
14,000	17.5773	17.5072	17.4372	17.3675	17.2980	17.2287	17.1597	17.0909	17.0223	16.9539
15,000	16.8858	16.8187	16.7501	16.6827	16.6154	16.5483	16.4815	16.4149	16.3485	16.2824
16,000	16.2164	16.1507	16.0851	16.0198	15.9547	15.8899	15.8252	15.7608	15.6965	15.6325
17,000	15.5687	15.5051	15.4417	15.3785	15.3155	15.2582	15.1902	15.1279	15.0657	15.0038
18,000	14.9421	14.8806	14.8192	14.7581	14.6972	14.6365	14.5760	14.5157	14.4556	14.3957
19,000	14.3360	14.2765	14.2173	14.1582	14.0993	14.0406	13.9821	13.9238	13.8657	13.8078
20,000	13.7501	13.6926	13.6352	13.5781	13.5212	13.4644	13.4079	13.3516	13.2954	13.2394
21,000	13.1836	13.1281	13.0727	13.0175	12.9624	12.9076	12.8530	12.7985	12.7442	12.6902
22,000	12.6363	12.5826	12.5290	12.4757	12.4225	12.3696	12.3168	12.2642	12.2117	12.1595
23,000	12.1074	12.0556	12.0039	11.9523	11.9010	11.8498	11.7988	11.7480	11.6974	11.6469
24,000	11.5967	11.5466	11.4966	11.4469	11.3973	11.3479	11.2987	11.2496	11.2007	11.1520
25,000	11.1035	11.0551	11.0069	10.9589	10.9110	10.8634	10.8158	10.7685	10.7213	10.6743
26,000	10.6274	10.5808	10.5342	10.4879	10.4417	10.3957	10.3498	10.3041	10.2586	10.2133
27,000	10.1681	10.1230	10.0781	9.98887	9.98887	9.90023	9.90023	9.85616	9.81224	9.76848
28,000	9.72488	9.68144	9.63815	9.59502	9.55205	9.50923	9.46658	9.42407	9.38172	9.33952
29,000	9.29748	9.25559	9.21385	9.17227	9.13083	9.08956	9.04843	9.00745	8.96662	8.92594
30,000	8.88541	8.84503	8.80480	8.76472	8.72479	8.68500	8.64536	8.60587	8.56652	8.52732
31,000	8.48826	8.44935	8.41059	8.37197	8.33349	8.29515	8.25696	8.21891	8.18100	8.14324
32,000	8.10561	8.06813	8.03079	7.99358	7.95652	7.91960	7.88281	7.84616	7.80966	7.77328
33,000	7.73705	7.70095	7.66499	7.62917	7.59348	7.55793	7.52251	7.48722	7.45208	7.41706
34,000	7.38218	7.34743	7.31281	7.27833	7.24397	7.20975	7.17566	7.14170	7.10787	7.07417
35,000	7.04060	7.00716	6.97385	6.94066	6.90761	6.87468	6.84188	6.80920	6.77665	6.74423
36,000	6.71194	6.67977	6.64774		6.58414		6.52115		6.45877	
37,000	6.39698		6.33578		6.27517		6.21514		6.15568	
38,000	6.09679		6.03846		5.98070		5.92348		5.86681	
39,000	5.81069		5.75510		5.70004		5.64551		5.59151	
40,000	5.53801		5.48503		5.43256		5.38059		5.32911	
41,000	5.27813		5.22764		5.17763		5.12809		5.07904	
42,000	5.03045		4.98232		4.93466		4.88745		4.84069	
43,000	4.79439		4.74852		4.70309		4.65810		4.61354	
44,000	4.56940		4.52569		4.48239		4.43951		4.39704	
45,000	4.35497		4.31331		4.27205		4.23118		4.19070	
46,000	4.15061		4.11090		4.07157		4.03262		3.99405	
47,000	3.95584		3.91799		3.88051		3.84339		3.80662	
48,000	3.77020		3.73413		3.69481		3.66303		3.62799	
49,000	3.59328		3.55890		3.52486		3.49113		3.45774	
50,000	3.42466		3.39189		3.35945		3.32731		3.29548	
51,000	3.26395		3.23273		3.20180		3.17117		3.14083	

Figure 6-6A. Conversion Table - Altitude to Inches of Mercury

CAUTION

Apply only suction (vacuum) to static system when checking.

Note

Steps a. 3 thru a. 6 consist of a typical vacuum system check. Figures shown will vary with the geographical location where check is to be made. In all cases, the acceptable check consists of evacuation of the static system until a pressure differential equivalent to the maximum cabin pressure differential is obtained. Without additional pumping for a period of 1 minute, the indicated loss of altitude shall not exceed 2% of the equivalent altitude of the maximum cabin differential pressure or 100 feet, whichever is greater. An altitude to inches of mercury (Hg) conversion table is provided to assist personnel in performing the following check. All altitude readings are taken to the nearest 100 feet.

3. Determine the local geographical altitude and convert to inches of mercury (Hg).
Example: Wichita, Kansas - Altitude 1332 feet. Converted to inches of mercury by use of the table in figure 6-6A, 1300 feet = 28.5421 (Hg).
4. Convert the cabin differential pressure (8.3 psi) to inches of mercury by multiplying 8.3 by 2.036 (the equivalent of 1 psi in inches of mercury) which equals 16.8988 Hg.
5. Subtract the results of step a. 4 from results of a. 3 and convert to altitude. This is the desired altimeter reading to which the system must be evacuated.
Example: 28.5421 Hg minus (-) 16,8988 Hg = 11.6433.
11.6433 converted to altitude = 23,900 feet (this is the required altimeter reading).
6. Evacuate the system until the altimeter reading determined in step a. 5 is obtained. Turn off vacuum source, sealing the system. Observe altimeter drop for 1 minute. Loss of altitude shall not exceed 2% of the required altimeter reading in 1 minute.
Example: Required altimeter reading 23,900 feet. 2% of 23,900 feet = 478 feet (maximum drop in 1 minute is 478 feet).

7. [A] Block the instrument alternate static port and open static source valve. Loss of altitude shall not exceed the required reading obtained in step a. 6.
8. If acceptable, release vacuum slowly and perform check of remaining static system.

b. Pressurization Valve Static Lines.

Note

The following procedure can be used for both static lines.

1. Assure that lines are securely connected and alternate static source blocked.
2. Apply a vacuum at the applicable static port until the vacuum gage indicates 18,000 feet (14.94 inches of Hg). Turn off vacuum source sealing the system; leakage rate for 1 minute should not raise the vacuum gage to more than 17,500 feet (15.25 inches of Hg).
3. If acceptable, release vacuum slowly and return system to normal.

c. Autopilot Altitude Controller.

Note

The procedure as outlined for the pressurization valves applies to the autopilot altitude controller except leakage rate for 1 minute should not raise the vacuum gage to more than 17,900 feet (15.00 inches of Hg).

[A] Aircraft 23-003 thru 23-099 modified by SK23/24-282.

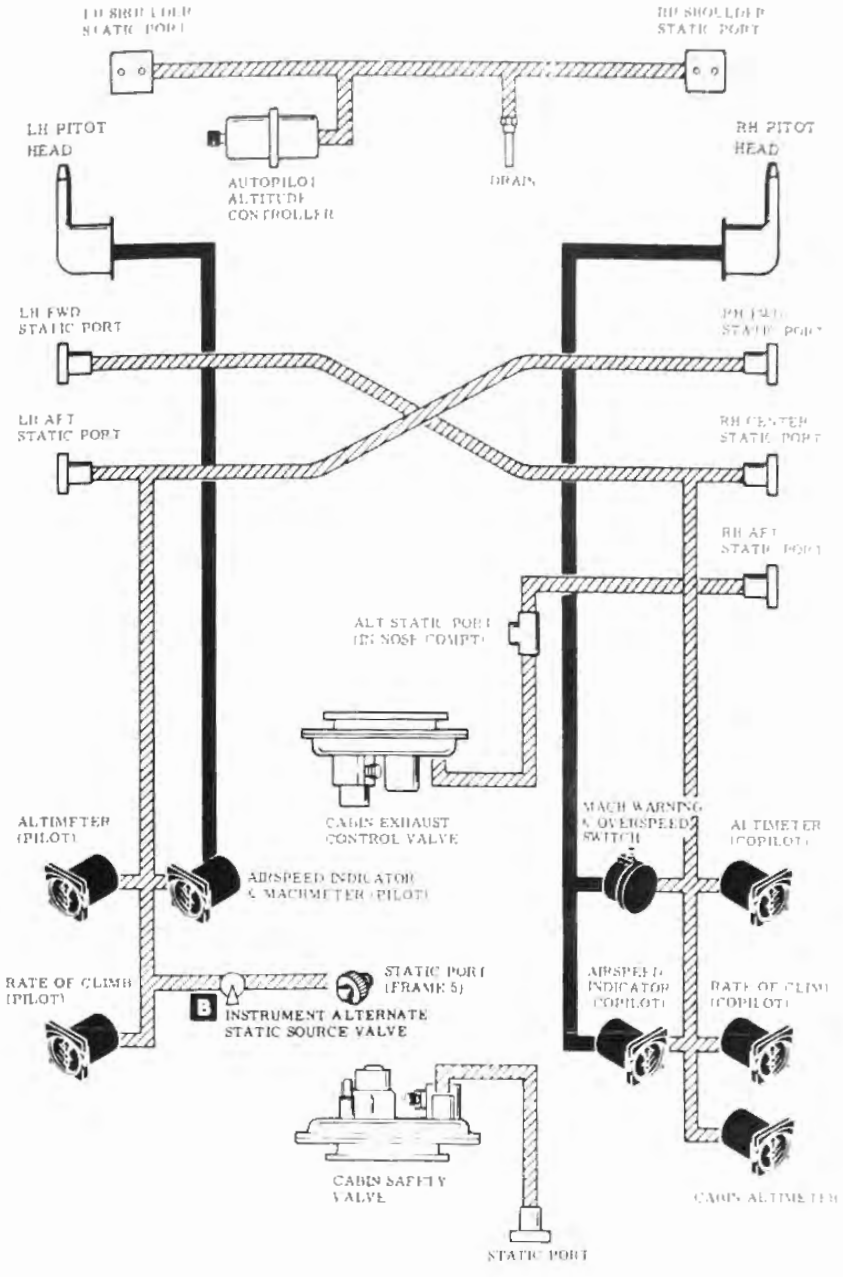

B Aircraft 23-003 thru 23-099 Modified by SK23/24-282.

AIRCRAFT 23-003 THRU 23-099 NOT EQUIPPED WITH 3/8-INCH STATIC AND PITOT LINES AND HEATED STATIC PORTS.

Figure 6-7. Pitot Static System Schematic

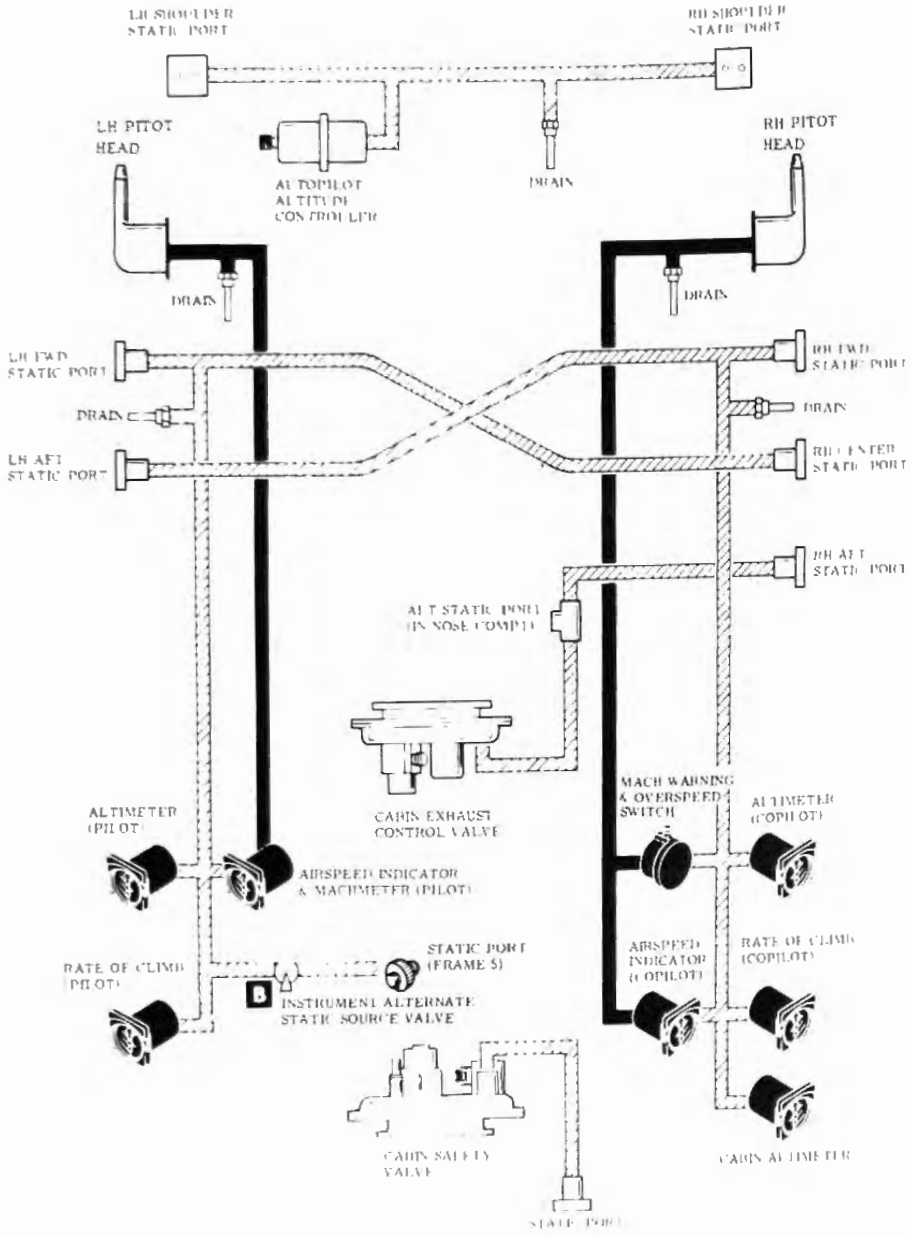

D Aircraft 23-003 thru 23-099 Modified by SK23/24-282.

AIRCRAFT 23-003 THRU 23-099 EQUIPPED WITH 3/8-INCH STATIC AND PITOT LINES AND HEATED STATIC PORTS.

Figure 6-7A. Pitot Static System Schematic

1. Static Port
2. Pitot Head
3. Altimeter
4. Rate of Climb Indicator
5. Airspeed Indicator
6. Cabin Altimeter
7. Airspeed and Mach Indicator
8. Machmeter
9. Mach Warning Switch
10. Tube (To Pitot Head)
11. Tube (To Static Port)
12. Tube Assembly (To Exhaust Valve)
13. Tube Assembly (To Safety Valve)
14. Tube Assembly (To Dump Valve)
15. Tube Assembly (From Dump Valve)
16. Cabin Safety Valve
17. Aft Static Source
18. Autopilot Altitude Controller
19. Drain
20. Frame 5
21. Solenoid Valve
22. Tailcone Static Port
23. Frame 24
24. Pressure Switch
25. Tee
26. Frame 22
27. Safety Valve Static Port Tube
28. [B] Instrument Alternate Static Source Valve
29. [B] Instrument Alternate Static Port

[B] Aircraft 23-003 thru 23-099 When Modified by SK23/24-282.

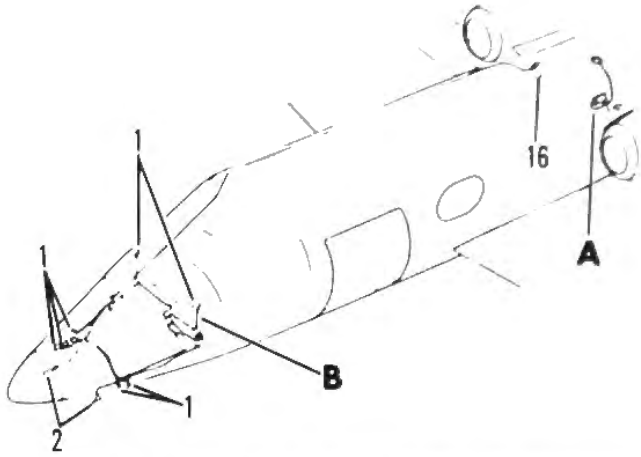

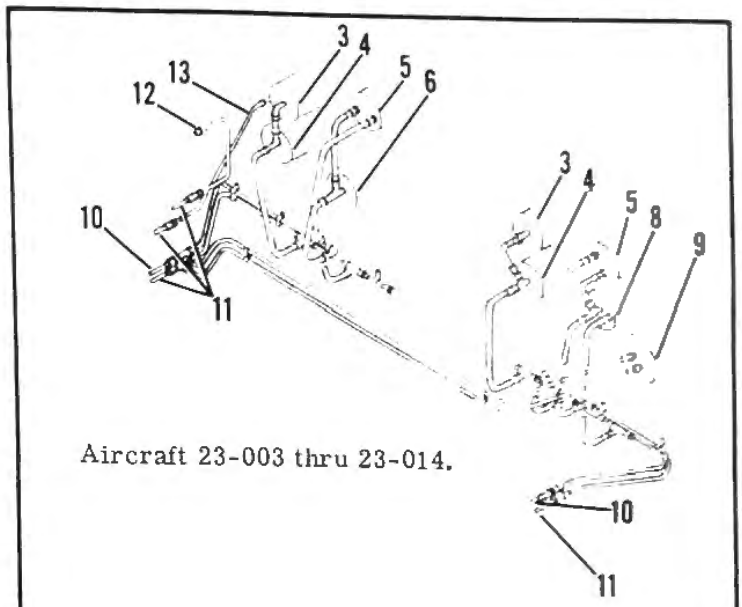

Aircraft 23-003 thru 23-014.

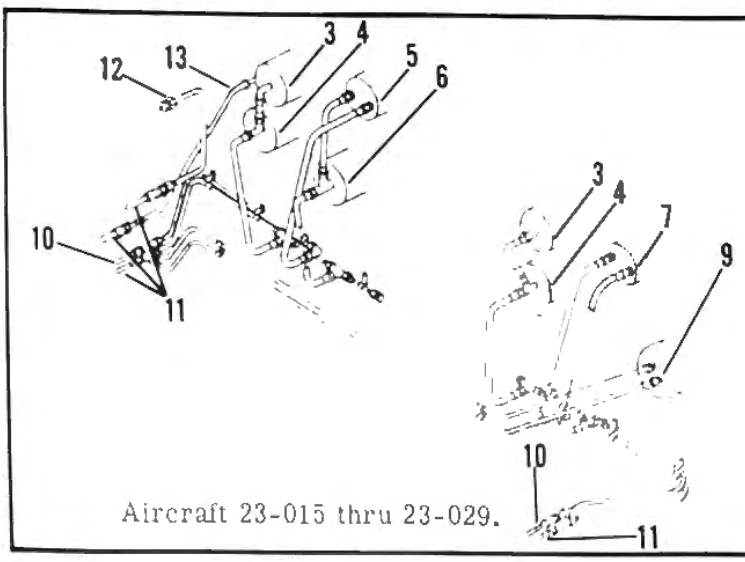

Aircraft 23-015 thru 23-029.

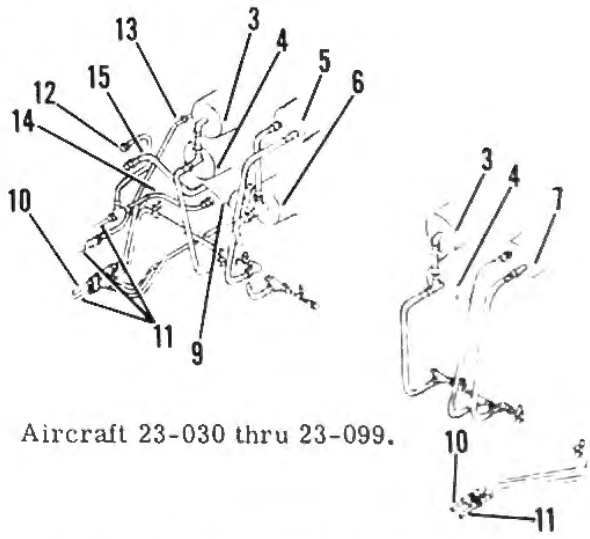

Aircraft 23-030 thru 23-099.

AIRCRAFT 23-003 THRU 23-099 NOT EQUIPPED WITH 3/8-INCH STATIC AND PITOT LINES AND HEATED STATIC PORTS.

Figure 6-8. Pitot Static System Plumbing Installation (Sheet 1 of 3)

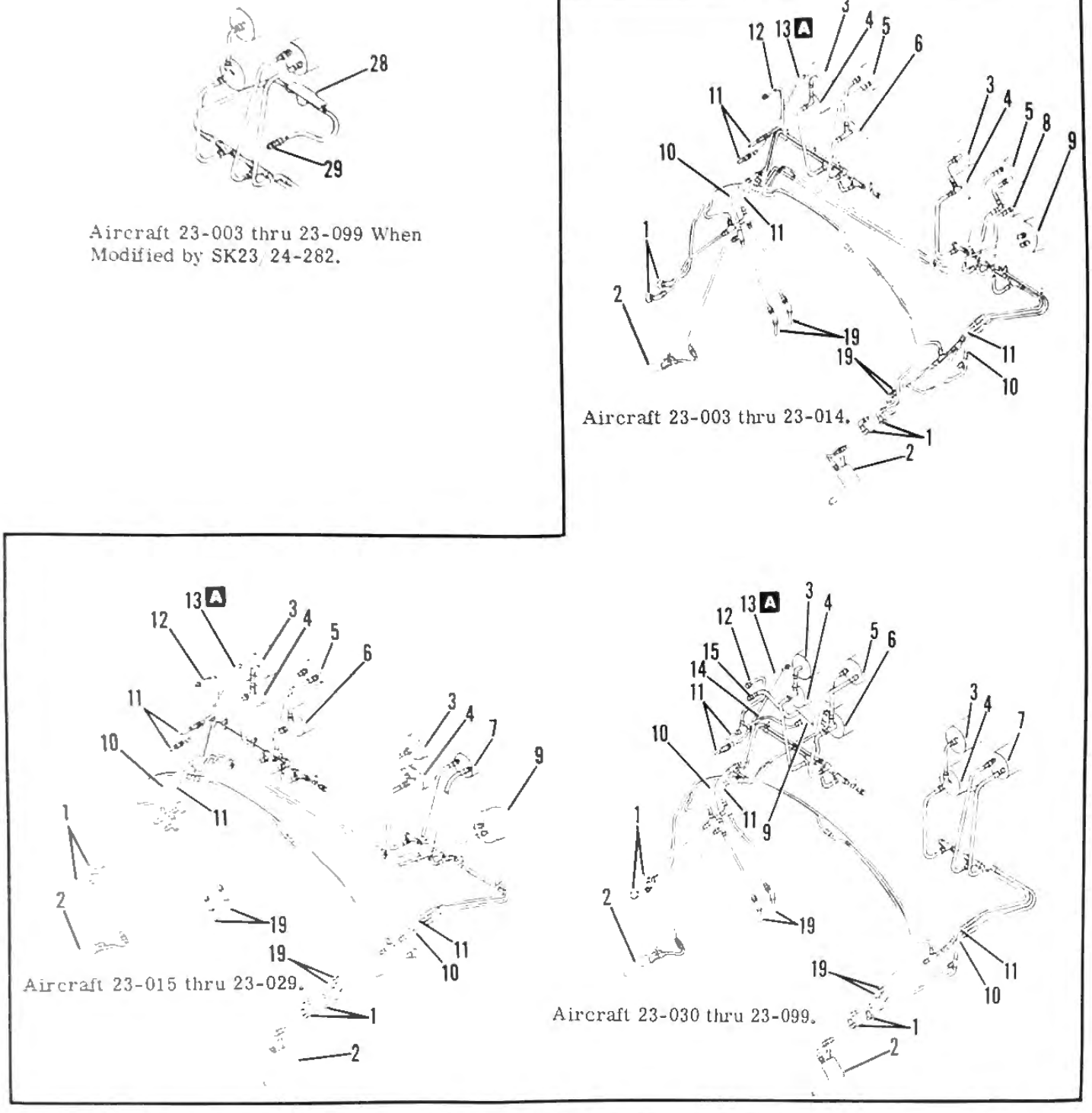

AIRCRAFT 23-003 THRU 23-099 WHEN EQUIPPED WITH 3/8-INCH STATIC AND PITOT LINES AND HEATED STATIC PORTS.

Figure 6-8. Pitot Static System Plumbing Installation (Sheet 2 of 3)

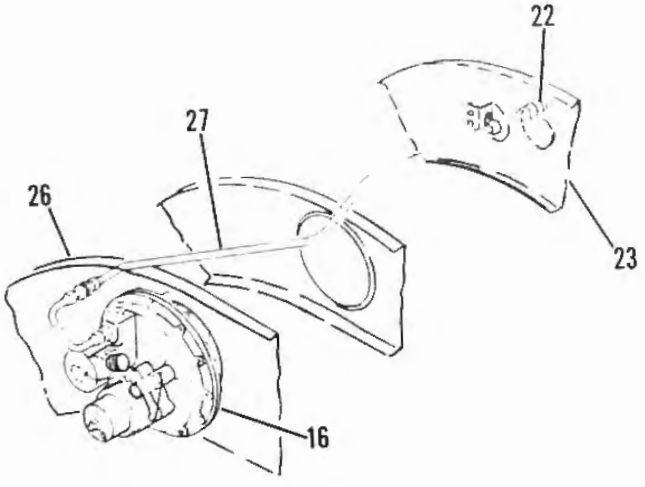

Aircraft 23-003 thru 23-099 When Modified by SK23/24-238.

B

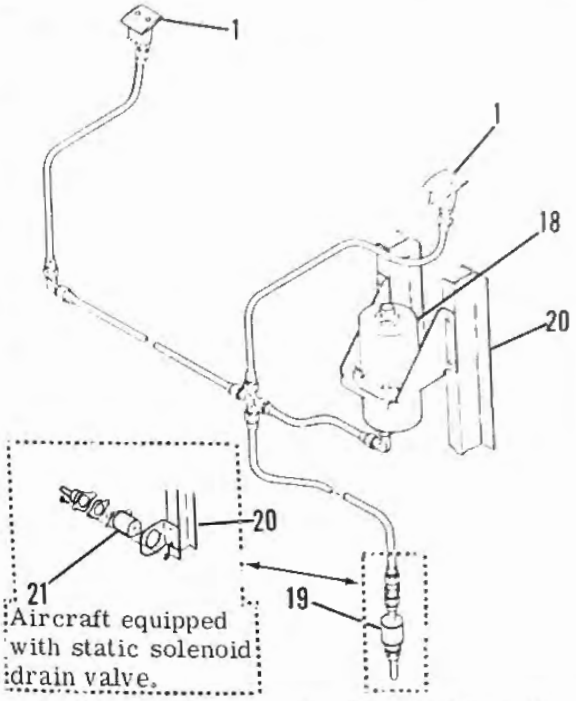

Aircraft 23-070 thru 23-099 and Aircraft Modified by SK23/24-226.

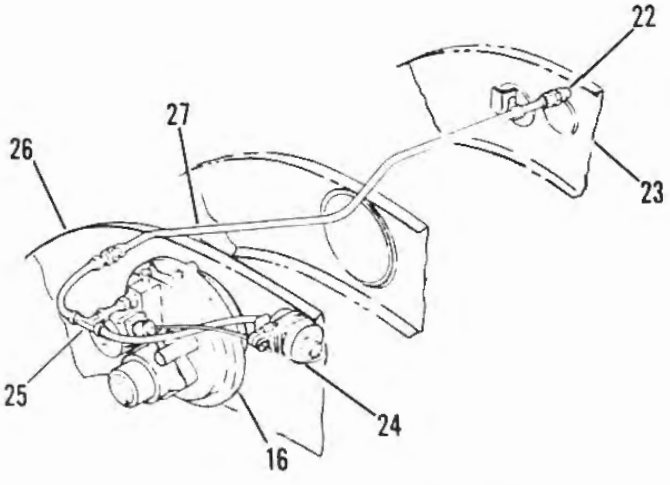

Aircraft 23-003 thru 23-099 When Modified by SK23/24-294.

A

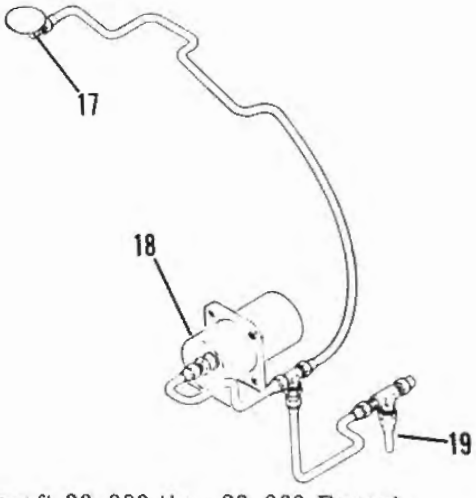

Aircraft 23-003 thru 23-069 Except Aircraft Modified by SK23/24-226.

Figure 6-8. Pitot Static System Plumbing Installation (Sheet 3 of 3)

FLIGHT INSTRUMENTS. (See figure 6-2.) The flight instruments furnish the crew with necessary indications of the aircraft flight conditions. All flight instruments are mounted on the instrument panel.

AIRSPEED INDICATORS. (See figure 6-2.) [A] Two ([B] one) airspeed indicators are installed in the aircraft. The indicator has an airspeed pointer, a maximum safe airspeed pointer, and a mach index window. The airspeed pointer indicates airspeed (in knots) in response to the expansion and contraction of a diaphragm. The diaphragm action is resultant from the differential in pitot and static pressure when changing flight speed and altitude. The striped maximum safe airspeed pointer indicates the maximum safe airspeed at the existing altitude. The mach index window indicates the critical mach limit at all times. Should the airspeed indicator require maintenance and recalibration, recalibrate in accordance with Technical Standard Order -2C.

MACHMETER [A]. (See figure 6-2.) The machmeter, installed on the pilot's flight panel, indicates existing airspeed in percent of Mach. The instrument is graduated from .3 to 1.0 Mach.

AIRSPEED AND MACH INDICATOR [B]. (See figure 6-2.) The airspeed and mach indicator is a dual purpose indicator. The indicator has an airspeed pointer, a minimum safe airspeed indicator, and a mach limit pointer. The airspeed pointer indicates airspeed (in knots) and corresponding mach number. The mach scale is a compensated scale, adjusting for changes in static pressure transmitted from the static port, at changes in altitude. The airspeed indicator responds to expansion and contraction of a diaphragm resultant from changes in pressure transmitted from the pitot heads. The minimum safe airspeed pointer is adjusted by the knob in the lower right corner of the indicator. The mach pointer is adjusted by pressing the knob and adjusting to desired mach limit.

MACH WARNING SYSTEM. (Refer to Section IX for wiring diagram.) The mach warning system consists of a mach warning switch which feeds a signal into the aircraft audio system to produce a distinctively different aural warning to the crew when the aircraft reaches predetermined airspeeds. An [A] OVERSPEED test switch located on the pilot's subpanel ([B] a MACH TEST switch located on the control pedestal) is used to test system operation.

MACH/OVERSPEED SWITCH FUNCTIONAL CHECK. (See figure 6-8A.) During normal aircraft flight, the Mach/Overspeed switch is seldom actuated; therefore, in accordance with current inspection requirements, Section VIII, the Mach/Overspeed switch should be functionally checked as follows using an MB-1 tester or equivalent:

a. Attach hose from MB-1 pitot port to the RH pitot head. Remove cap from RH static line forward of the instrument panel and attach hose from MB-1 static port to instrument static line. Assure that static ports and all drain valves are blocked.

b. Set Battery switch to ON.

c. Close MB-1 source valves, vent valves, and open the crossbleed valve.

CAUTION

DO NOT exceed 5000 feet per minute rate of climb while applying vacuum to the pitot and static system. Exceeding 5000 feet per minute rate of climb may cause damage to the instrument.

d. Using the MB-1 vacuum pump and opening the vacuum source valve, apply vacuum to both the pitot and static systems until the copilot's altimeter indicates 10,000 feet corrected altitude (refer to instrument error correction card). Close source valve and crossbleed valve.

CAUTION

DO NOT exceed 20 knots per second when venting atmospheric pressure into pitot system. Exceeding 20 knots per second may cause damage to the instrument.

e. With crossbleed valve closed, slowly open pitot vent valve and vent atmospheric pressure into the pitot system. This will cause the copilot's airspeed indicator to increase. When aural warning sounds, immediately close pitot vent valve and record airspeed at which aural warning sounds. Aural warning will sound at 351 to 362 knots at 10,000 feet.

f. Slowly open MB-1 crossbleed valve to return the airspeed indicator to zero.

g. With the crossbleed valve open and using the MB-1 vacuum pump and opening vacuum source valve, apply vacuum to both the pitot and static systems until copilot's altimeter indicates 41,000 feet corrected altitude (refer to instrument error correction card). Close vacuum source valve and crossbleed valve.

h. With crossbleed valve closed, slowly open pitot vent valve and vent atmospheric pressure into pitot system. This will cause the copilot's airspeed indicator to increase. When aural warning sounds, immediately close pitot vent valve and record airspeed at which aural warning sounds. Aural warning will sound at 239 to 246 knots at 41,000 feet.

i. Slowly open crossbleed valve to return the airspeed indicator to zero. With the crossbleed valve open, slowly open the static vent valve to return the altimeter to field elevation.

j. Disconnect MB-1 tester from the static and pitot systems. Set Battery switch to off. Install instrument line plug and remove tape from static ports and drains.

TURN AND BANK INDICATOR. (See figure 6-2.) The turn and bank indicators are located on the pilot's and

[A] Aircraft 23-003 thru 23-014.

[B] Aircraft 23-015 thru 23-099.

copilot's flight panels. The indicator comprises an electrically driven gyroscopic rate of turn indicator and a fluid damped inclinometer. The turn indicator pointer, actuates by an electrically driven gyro, moves in the direction of a turn in an amount proportional to rate of turn. A one-pointer-width deflection indicates a turn of 90° per minute. The relationship of the black ball in the inclinometer to the two wires at the center of the inclinometer indicates the lateral attitude of the aircraft. [A] A turn and bank power failure light, located on the instrument panel, lights in case of power failure to the turn and bank indicator. The indicator and warning light are powered by 28 vdc.

RATE OF CLIMB INDICATOR. (See figure 6-2.) The rate-of-climb indicators are located on the pilot's and copilot's flight panels. The indicator consists of two air-enclosing chambers, a diaphragm and the air-tight case. When the static pressure varies because of changing altitudes, the case pressure lags behind diaphragm pressure due to a restriction in the flow of air into and out of the case. The instrument mechanism converts the resultant pressure differential into a visual indication of the rate-of-climb or descent of the aircraft in feet per minute. The instrument has a single pointer and two adjoining scales graduated in feet with a range of 0 to 6000. The setting screw on the lower left corner of the instrument is used to zero the pointer.

ALTIMETERS. (See figure 6-2.) The altimeters are located on the pilot's and copilot's flight panels. The altimeters convert static pressure into a visual indication of aircraft altitude. The indicator has an altitude dial, a barometric scale, an adjustment knob, and three pointers. The indicator is graduated in feet and has a range of 50,000 feet. The large pointer indicates hundreds of feet and makes 50 revolutions to move through the 50,000-foot range. The intermediate pointer indicates thousands of feet and makes five revolutions for the 50,000-foot range. The small pointer, an extension of the center dial disc, indicates ten thousands of feet and makes one-half of a revolution. The barometric scale indicates barometric pressure in inches of mercury, ranging from 28.1 to 31.0. Turning the adjustment knob will adjust the pointers to indicate zero at any existing pressure within the barometric scale.

MAGNETIC COMPASS. A compass, mounted on the windshield center channel above the center of the instrument panel assembly, is a short period magnetic compass intended to indicate continuously the aircraft's heading with reference to the earth's magnetic field. It is equipped with an instrument light and a compensating system. A compass correction card is carried on the mounting bracket.

COMPENSATION OF A MAGNETIC COMPASS.

a. Put the aircraft on a compass rose and level in accordance with Section I.

b. Loosen and swing compensator coverplate up out of the way.

c. Turn the "N-S" and the "E-W" compensator adjustment shafts to the null position by aligning the dot on the shafts with the dots on the compensator

[A] Aircraft 23-003 thru 23-014.

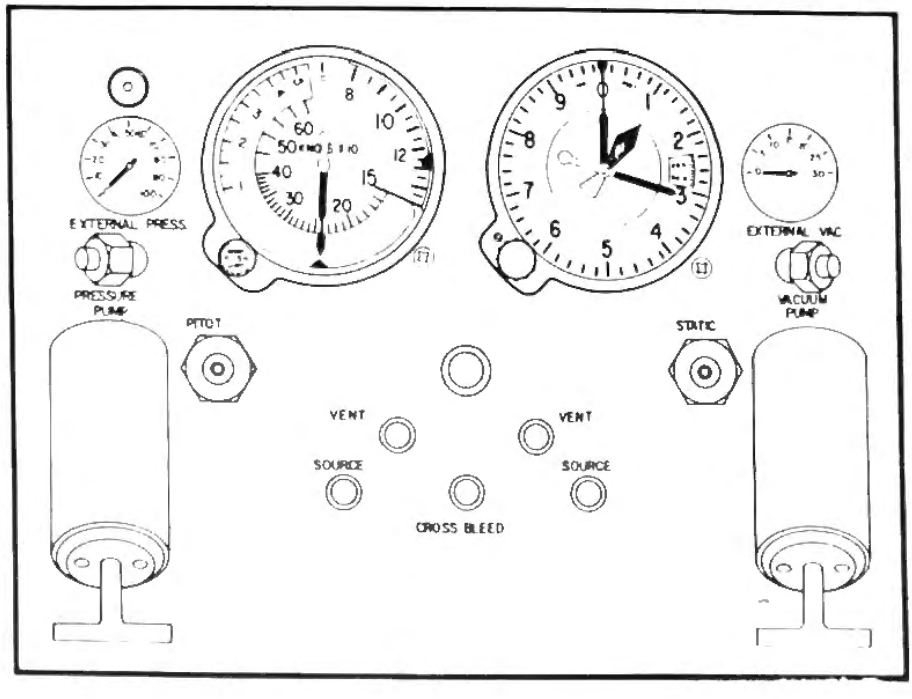

Figure 6-8A. MB-1 Pitot Static System Test Set

case. For this, as well as all other adjustments, use a non-magnetic screwdriver.

Note

When determining or adjusting the compass reading on all headings, both engines shall be running and all normal operating flight equipment turned on.

d. Align the aircraft, setting it on 0°, 30°, 60°, 90°, 120°, 150°, 180°, 210°, 240°, 270°, 300°, and 330° magnetic headings. At each heading, read the magnetic compass and the Directisyn (primary and secondary from pilot's side). Record the readings. The reading for the magnetic compass shall not vary more than 5° from the magnetic heading at any check point or the compass shall be recompensated or replaced. Record the corrected compass reading in the "Steer" columns of the compass correction card next to the true heading in the "To Fly" column for 0°, 30°, 60°, 90°, 120°, 150°, 180°, 210°, 240°, 270°, 300°, and 330°.

e. The compass should be compensated using coefficients "B" and "C" as explained in the following example:

1. Assuming that the compass heading, readings, and deviations are:

Magnetic Heading	Compass Reading	Deviation
180°	178°	2
270°	274°	-4
0°	6°	-6
90°	90°	0

2. Coefficient "C": $C = \frac{N-S}{2}$ or $C = \frac{(-6) - (+2)}{2} =$ -2°; therefore, with the airplane on north magnetic heading (actual compass reading 358°), turn the N-S compensator until the compass reads 0°.

Note

For all practical purposes, disregard any fraction of a degree when compensating the compass.

3. Coefficient "B": $B = \frac{E-W}{2}$ or $B = \frac{0 - (-4)}{2} =$ -2°; therefore, with the aircraft on east magnetic heading (actual compass reading in this particular case will also be 88°), turn the E-W compensator until the compass reads 90°.

f. Position aircraft on primary and secondary magnetic headings and record magnetic headings and corresponding compass readings in their proper columns.

g. Fill out "Steer" column by making a residual swing through all 24 positions. Then fill in blanks on back of card. Tear off compass card and place it in the cockpit compass card holder. File remainder of card as a permanent record.

h. Position compensator coverplate over compensator and tighten screws.

FLUX VALVE CALIBRATION - DIRECTISYN. (See figure 6-9.) The flux valve assembly includes a compensator to be used if the flux valve cannot be sufficiently adjusted to align the heading indicator to Magnetic North. The flux valve is installed on a mounting bracket in the tailcone section of the tip tanks to decrease electrical and magnetic disturbances. Perform the following steps to calibrate the flux valve in the aircraft.

a. Remove tip tank tailcone assembly.

b. Position the aircraft to a known heading, preferably to Magnetic North.

c. [A] Place the SLAVE/FREE switch to the SLAVE position.

d. Set the aircraft inverter switch to the ON position. After 90 (±18) seconds, the GYRO flag on the heading indicator will disappear and the Directisyn will become operative.

e. Rotate the flux valve until the annunciator nulls and the heading indicator indicates NORTH or to the heading of the aircraft. If the correct indications cannot be obtained, perform step i.

f. Tighten the three mounting screws.

g. Position the aircraft to several known headings. The heading indicator should track the aircraft position ±2°.

h. If the error in step g was greater than ±2°, install the compensator on the flux valve and recalibrate.

i. Rotate the flux valve and then adjust the NS and EW adjustment screws on the compensator as necessary to decrease the heading error to 2° or less.

j. Tighten the three mounting screws.

k. Repeat step g. If the error is greater than 2°, repeat step i.

l. Install tip tank tailcone assembly.

1. Tip Tank Tailcone
2. Bracket
3. Tip Tank
4. Directisyn Flux Valve
5. Compensator

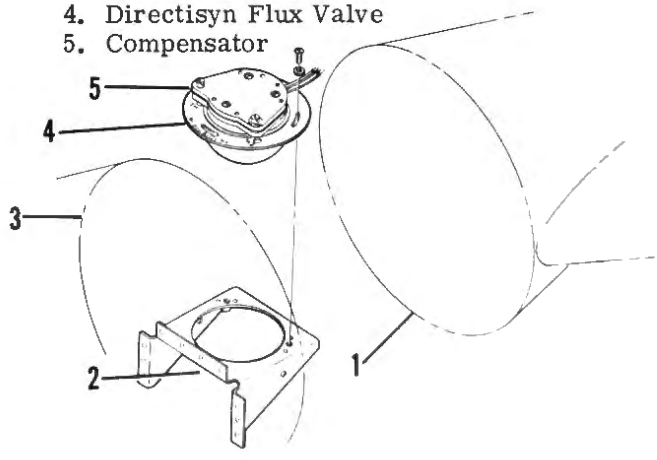

Figure 6-9. Directisyn Flux Valve Installation

[A] Aircraft 23-003 thru 23-014

MISCELLANEOUS INSTRUMENTS.

CLOCK. (See figure 6-2.) The clock is a conventional stem-wound spring-actuated eight-day unit. A knob is located in the lower left portion of the clock face for winding and resetting.

FUEL QUANTITY GAGE. (See figure 6-2.) The fuel quantity gage is located on the instrument panel or center pedestal. Depending on FUEL SELECTOR setting, the indicator indicates total fuel remaining on board the aircraft or total fuel remaining in each tank. For additional information on the fuel quantity indicating system, refer to Section V.

FLAP POSITION INDICATOR. (See figure 6-2.) The flap position indicator is located on the pilot's flight panel. The indicator is graduated in 10° increments from UP to 40° DOWN. Calibration of the flap position indicator is performed at the Position Indicator Calibration Assembly. For additional information on the flap system, refer to Section II.

RAM AIR TEMPERATURE GAGE. (See figure 6-2.) The ram air temperature gage is located on the co-pilot's flight panel. The temperature sensing bulb is located in the dorsal air inlet. The gage has a positive range of 0° to 40° C and a negative range of 0° to -60° C.

CABIN AIR PRESSURE INDICATOR. (See figure 6-2.) This indicator, mounted on the instrument panel, indicates cabin altitude in 1000's of feet. It is installed to give continuous reference to the crew as to the effectiveness of the pressurization system.

CABIN ALTIMETER. (See figure 6-2.) For information on the cabin altimeter, refer to Section IV.

OXYGEN PRESSURE GAGE. (See figure 6-2.) The oxygen pressure gage, located on the instrument panel, is connected to the high pressure side of the oxygen cylinder reducer assembly. The gage is graduated from 0 to 2000 psi. For additional information on the oxygen system, refer to Section IV.

AC VOLTMETER. (See figure 6-2.) The AC voltmeter, located on the instrument panel, indicates inverter output voltage. The indicator is graduated from 0 to 150 volts.

DC VOLTMETER. (See figure 6-2.) The DC voltmeter, located on the instrument panel, indicates generator output voltage supplied to the aircraft electrical buses. The indicator is graduated from 0 to 30 volts.

AMMETERS. (See figure 6-2.) Two ammeters, located on the instrument panel, indicate the amperage output of each generator. Each ammeter has a range from 0 to 400 amperes.

EMERGENCY AIR PRESSURE GAGE. (See figure 6-2.) The direct reading emergency air pressure gage, located on the instrument panel, indicates the existing air bottle pressure. For additional information on the emergency air system, refer to Section III.

HYDRAULIC PRESSURE INDICATOR [A]. (See figure 6-2.) The hydraulic pressure indicator is located on the instrument panel. The pressure transmitter is plumbed to the air side of the hydraulic accumulator and normally indicates hydraulic system pressure except when the hydraulic pressure falls below the accumulator air charge. Under these conditions, the gage will indicate the accumulator air charge even though there may be no hydraulic system pressure. The plumbing arrangement indicates accumulator charge prior to engine start and furnishes further protection against fluid loss in case of a pressure indicating system component failure. The system is powered by 26 vac; therefore, the main or standby inverter must be ON for the system to be operable.

HYDRAULIC PRESSURE GAGE [B]. (See figure 6-2.) The direct reading hydraulic pressure gage is located on the instrument panel. A capillary line connects the hydraulic pressure gage to the flap system pressure line and indicates hydraulic pressure at all times. When the hydraulic system is depressurized, the hydraulic pressure gage will indicate zero.

ROLL TRIM POSITION INDICATOR. The roll trim indicator, located on the center pedestal, indicates aileron trim tab position. Calibration of the roll trim indicator is performed at the Position Indicator Calibration Assembly. For additional information on the aileron trim tab system, refer to Section II.

YAW TRIM POSITION INDICATOR. The yaw trim indicator, located on the center pedestal, indicates rudder trim tab position. Calibration of the yaw trim indicator is performed at the Position Indicator Calibration Assembly.

PITCH TRIM POSITION INDICATOR. The pitch trim indicator, located on the center pedestal, indicates horizontal stabilizer position. The indicator is graduated in 2° increments from 0° to 10° UP and 0° to 4° DOWN. Calibration of the pitch trim indicator is performed at the Position Indicator Calibration Assembly. For additional information on the pitch trim system, refer to Section II.

POSITION INDICATOR CALIBRATION ASSEMBLY. (See figure 6-10.) The position indicator calibration assembly, located in the center pedestal, is used to calibrate position indicators. On [C], the unit consists of a series of resistors, a diode, and eight adjustable potentiometers mounted on a small metal panel. The

[A] Aircraft 23-003 thru 23-014.
[B] Aircraft 23-015 thru 23-099.
[C] Aircraft 23-003 thru 23-069.

panel, secured to the pedestal with four screws, must be removed for potentiometer adjustment. Two potentiometers are installed in the circuit for each position indicator. The potentiometers are decaled PITCH, ROLL, YAW, and FLAP. On [B], the unit consists of a series of resistors, a diode, and eight adjustable potentiometers mounted on a small circuit board. Access to the circuit board is through eight small holes in the center pedestal. Two potentiometers are installed in the circuit for each position indicator. The potentiometers are labeled P, R, Y and F.

CALIBRATION OF POSITION INDICATORS. (See figure 6-10.)

a. [A] Remove screws attaching calibration assembly to center pedestal and, using a small screwdriver, calibrate position indicator potentiometers. [B] Insert small screwdriver through holes in center pedestal and calibrate position indicator potentiometers as follows:

b. Pitch Trim Indicator.

1. Actuate horizontal stabilizer to full down position by setting pitch trim switch to NOSE UP.
2. Adjust nose up potentiometer to obtain full NOSE UP indication on pitch trim indicator.
3. Actuate horizontal stabilizer to full up position by setting pitch trim switch to NOSE DN.
4. Adjust nose down potentiometer to obtain full NOSE DOWN indication on pitch trim indicator.
5. Cycle horizontal stabilizer between full up and full down positions while checking respective indications on pitch trim indicator. Readjust nose up and nose down potentiometer as necessary to obtain coordinated indications.

c. Roll Trim Indicator.

Note

The aileron trim tab position transmitter must be approximately centered with tab in neutral position prior to calibrating roll trim indicator.

1. Actuate aileron trim tab to neutral position.
2. Adjust zero roll potentiometer to obtain zero indication on roll trim indicator.
3. Actuate aileron trim tab to full up position by setting roll trim switch to ROLL RT.

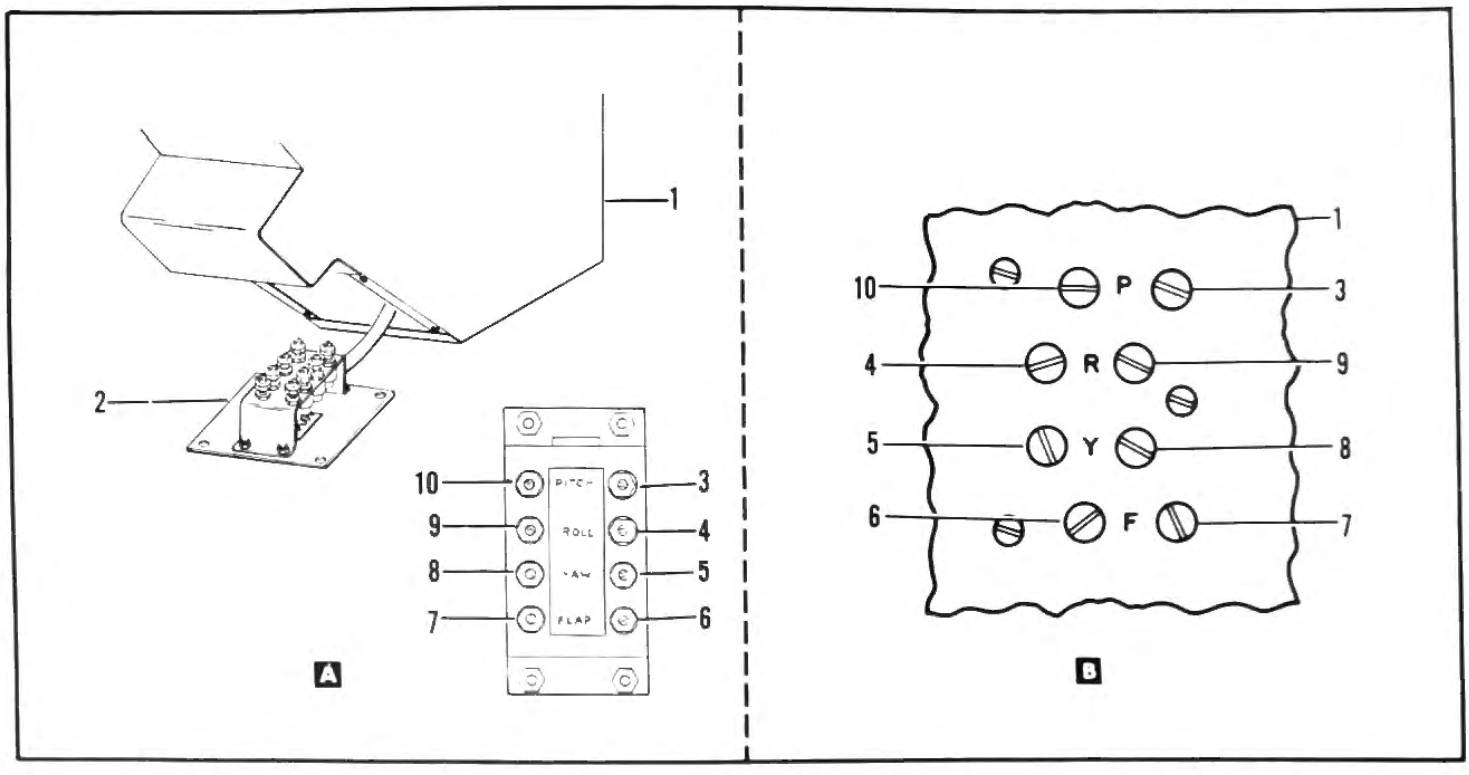

1. Center Pedestal
2. Calibration Assembly
3. Nose Up
4. Roll Expand
5. Yaw Expand
6. Flap Down
7. Zero Flap
8. Zero Yaw
9. Zero Roll
10. Nose Down

Figure 6-10. Position Indicator Calibration Assembly

[A] Aircraft 23-003 thru 23-069

[B] Aircraft 23-070 thru 23-099

4. Adjust roll expand potentiometer to obtain corresponding indication on roll trim indicator.
5. Actuate aileron trim tab to full down position by setting roll trim switch to ROLL LF.
6. Adjust roll expand potentiometer to obtain corresponding indication on roll trim indicator.
7. Cycle aileron trim tab while checking respective indications on roll trim indicator. Readjust roll expand potentiometer as necessary to obtain coordinated indications.

d. Yaw Trim Indicator.

Note

The rudder trim tab position transmitter must be approximately centered with tab in neutral position prior to calibrating the yaw trim indicator.

1. Actuate rudder trim tab to neutral position.
2. Adjust zero yaw potentiometer to obtain zero indication on yaw trim indicator.
3. Actuate rudder trim tab to full left position by setting yaw trim switch to NOSE RT.
4. Adjust yaw expand potentiometer to obtain corresponding indication on yaw trim indicator.
5. Actuate rudder trim tab to full right position by setting yaw trim switch to NOSE LF.
6. Adjust yaw expand potentiometer to obtain corresponding indication on yaw trim indicator.
7. Cycle rudder trim tab while checking respective indications on yaw trim indicator. Readjust yaw expand potentiometer as necessary to obtain coordinated indications.

e. Flap Position Indicator.

1. Actuate flaps to full up position.
2. Adjust zero flap potentiometer to obtain flaps up indication on flap position indicator.
3. Actuate flaps to the DN position.
4. Adjust flap down potentiometer to obtain flap down indication on flap position indicator.
5. Cycle flaps while checking respective indication on flap position indicator. Readjust flap down potentiometer as necessary to obtain coordinated indications.

f. [A] Reinstall calibration assembly in center pedestal with four screws.

[A] Aircraft 23-003 thru 23-069.

SECTION VII
ELECTRICAL

TABLE OF CONTENTS

Title	Page
Wiring Identification	7-1
DC Power System	7-1
DC Power Distribution	7-1
Generator System	7-6
Starter Generator	7-6
Generator Control Panel	7-6
Generator Control Box	7-6
Overvoltage Control Box	7-6A
Reverse Current Cutout Relays	7-6A
Voltage Regulators	7-6B
Voltage Regulator Adjustment	7-8
Battery Power System	7-8
Batteries	7-9
Removal and Installation of Batteries	7-9
Auxiliary Battery System	7-10
External Power	7-10
AC Power Distribution	7-10
AC Power System	7-10
Inverters	7-11
Step-Down Transformers	7-11
Inverter Switching Relay	7-11
Inverter Power Relays	7-12
Circuit Breakers	7-12
Switch Panel	7-12
Speakers	7-12
Interior Lighting	7-16
Exterior Lighting	7-16

GENERAL. This section covers general aspects of the electrical systems. Details of actual systems are discussed in their appropriate section of this manual. The following information is intended to lay the groundwork for the basic understanding of the overall electrical systems so that maintenace personnel can better trouble shoot those systems in which difficulty is encountered.

WIRING IDENTIFICATION. (See figure 7-1.) Each wire in the aircraft has a number stamped on it several places near each junction end; plus 6 to 8 inches along its entire length. Each identification number is used for only one wire in the aircraft.

Note

The term "wire" as used herein, refers to one segment of wire, not a circuit made up of several lengths. A circuit may be made up of one or more segments (pieces) of wire. Each segment has its own identity.

DC POWER SYSTEM. (See figure 7-3.) DC power is supplied by the DC generator system, the DC battery system, or by the external power source.

DC POWER DISTRIBUTION. (See figure 7-3.)

DC POWER DISTRIBUTION FUNCTIONAL CHECK. It is recommended that the power distribution system be functionally checked for proper operation after maintenance of any type is performed in the tailcone area and in accordance with current inspection requirements, Section VIII. When performing this procedure, use standby fuel pump operation (on aircraft equipped with jet pumps) and main fuel pump operation (on aircraft without jet pumps) as evidence that the feeder buses are powered. On aircraft without jet pumps the standby fuel pumps are connected to the battery bus. Perform functional check as follows:

a. Set battery switch to ON and pull main DC power bus tie breaker (CB69). This will isolate the left and right feeder bus.

b. Set left fuel pump to ON and wait until L FUEL PRESS light goes out. Pull one of the left main DC bus circuit breakers; the L FUEL PRESS light should remain out. Pull remaining DC bus circuit breaker; the L FUEL PRESS light should light. This indicates all power has been removed from the left feeder bus.

Note

It is important that circuit breakers be depressed in the same order they were pulled.

c. Depress left main DC bus circuit breaker pulled first; the L FUEL PRESS light shoul go out. Depress remaining DC bus circuit breaker; the L FUEL PRESS light should remain out. This indicates that power is being supplied to the left feeder bus through both left main DC bus circuit breakers and both left feeder current limiters.

d. With main DC bus tie circuit breaker pulled, perform the above functional check on the right DC bus circuit breakers using the right fuel pump and R FUEL PRESS light.

CAUTION

After functional check is completed, assure that all circuit breakers are depressed.

Wiring Diagram Symbol	Specification or Part Number	AWG	Description
—30—	MIL-W-16878-D-Type B	30	Insulated Single Conductor Wire
—4—	MIL 5086, Type 2	4	Insulated Single Conductor Wire
— 8—	MIL 5086, Type 2	8	Insulated Single Conductor Wire
— 12—	MIL 5086, Type 1	12	Insulated Single Conductor Wire
—16—	MIL 5086, Type 1	16	Insulated Single Conductor Wire
—20—	MIL 5086, Type 1	20	Insulated Single Conductor Wire
—24—	BUB1936 NAL 63	24	Insulated Single Conductor AL63 Wire
—(20)—	MS18000-20	20	Teflon Insulated Single Conductor Wire (Abrasion Resistant)
—(16)—	MS18000-16	16	Teflon Insulated Single Conductor Wire (Abrasion Resistant)
—(12)—	MS18001-12	12	Teflon Insulated Single Conductor Wire (Abrasion Resistant)
—24—	1SBUB 1936 NAL63-JN	24	Single Conductor, Shielded with Nylon Jacket.
—24— —24—	2SBUB1936 NAL63-JN	24	Two Conductors - White and Black - Twisted and Shielded with Nylon Jacket
—24— —24— —24—	3SBUB1936 NAL63-JN	24	Three Conductors - Red Grey and Blue, Twisted and Shielded with Nylon Jacket

a. The wire numbers are identified as noted in the following typical example:

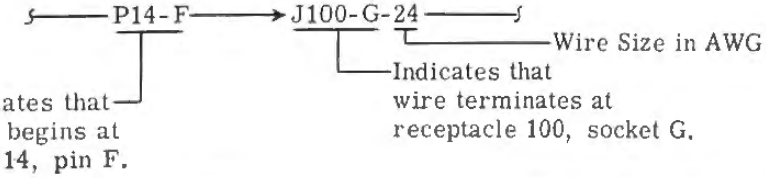

Figure 7-1. Wiring Identification

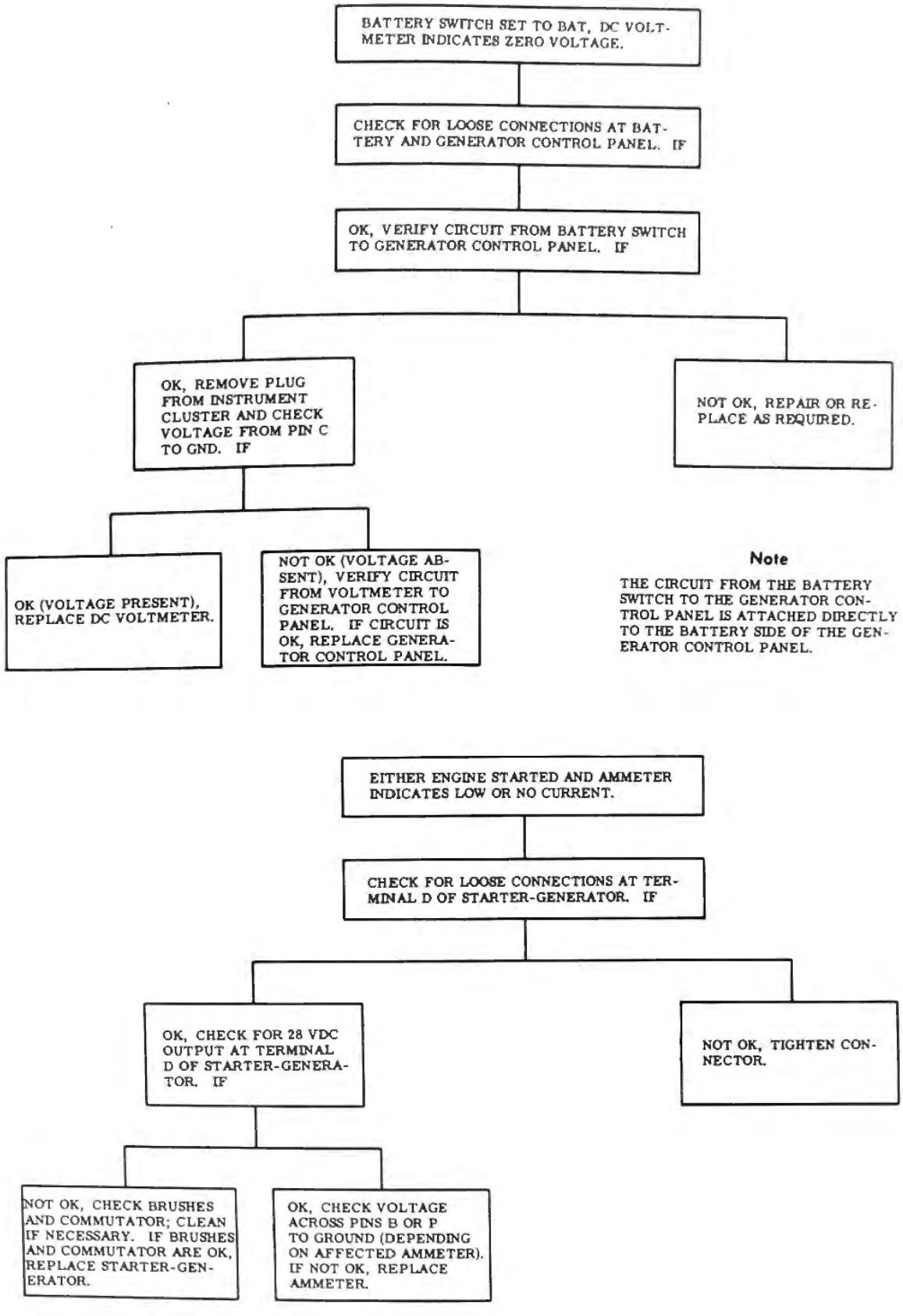

Figure 7-2. DC Power System Trouble Shooting (Sheet 1 of 2)

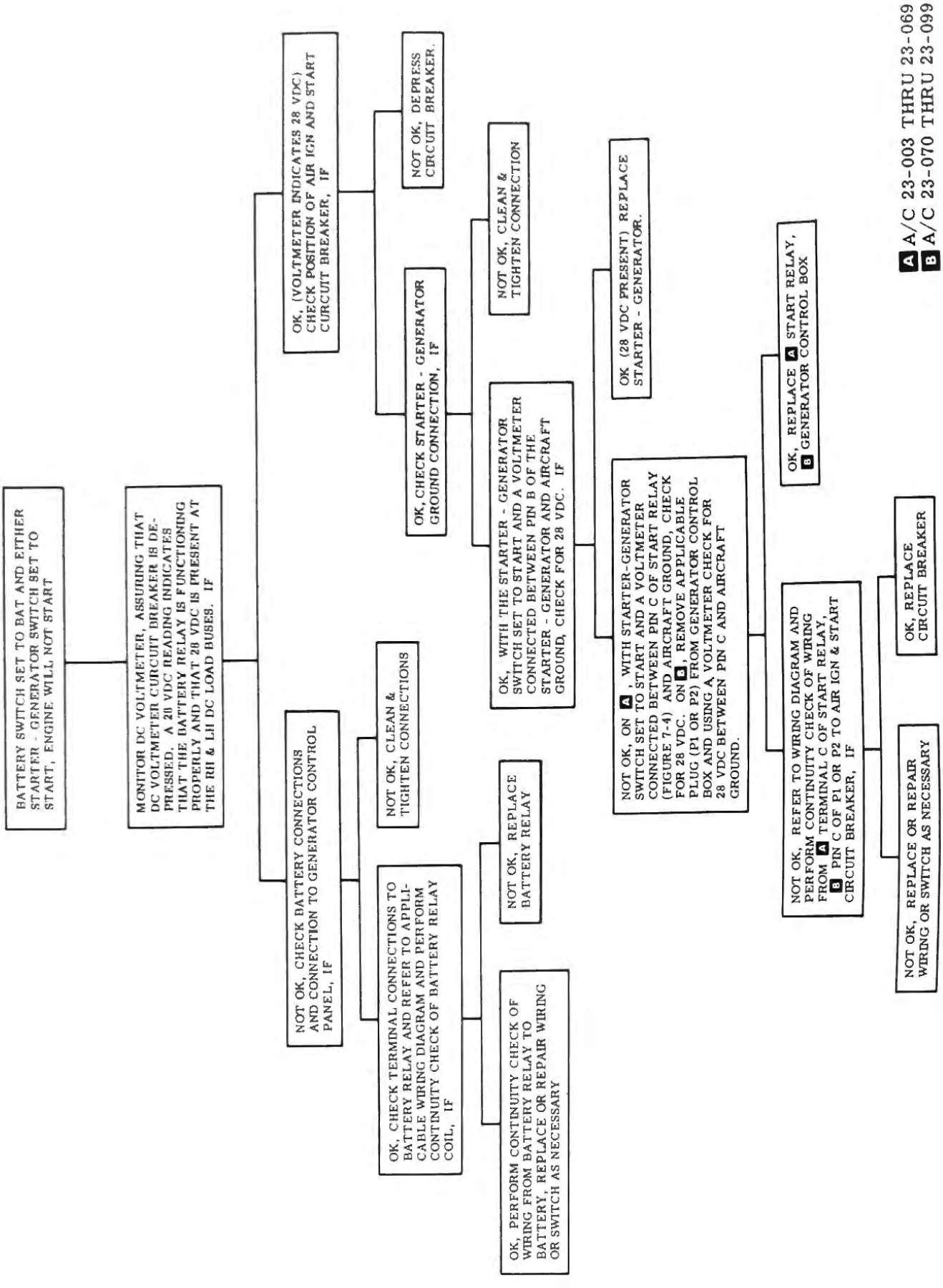

Figure 7-2. DC Power System Trouble Shooting (Sheet 2 of 2)

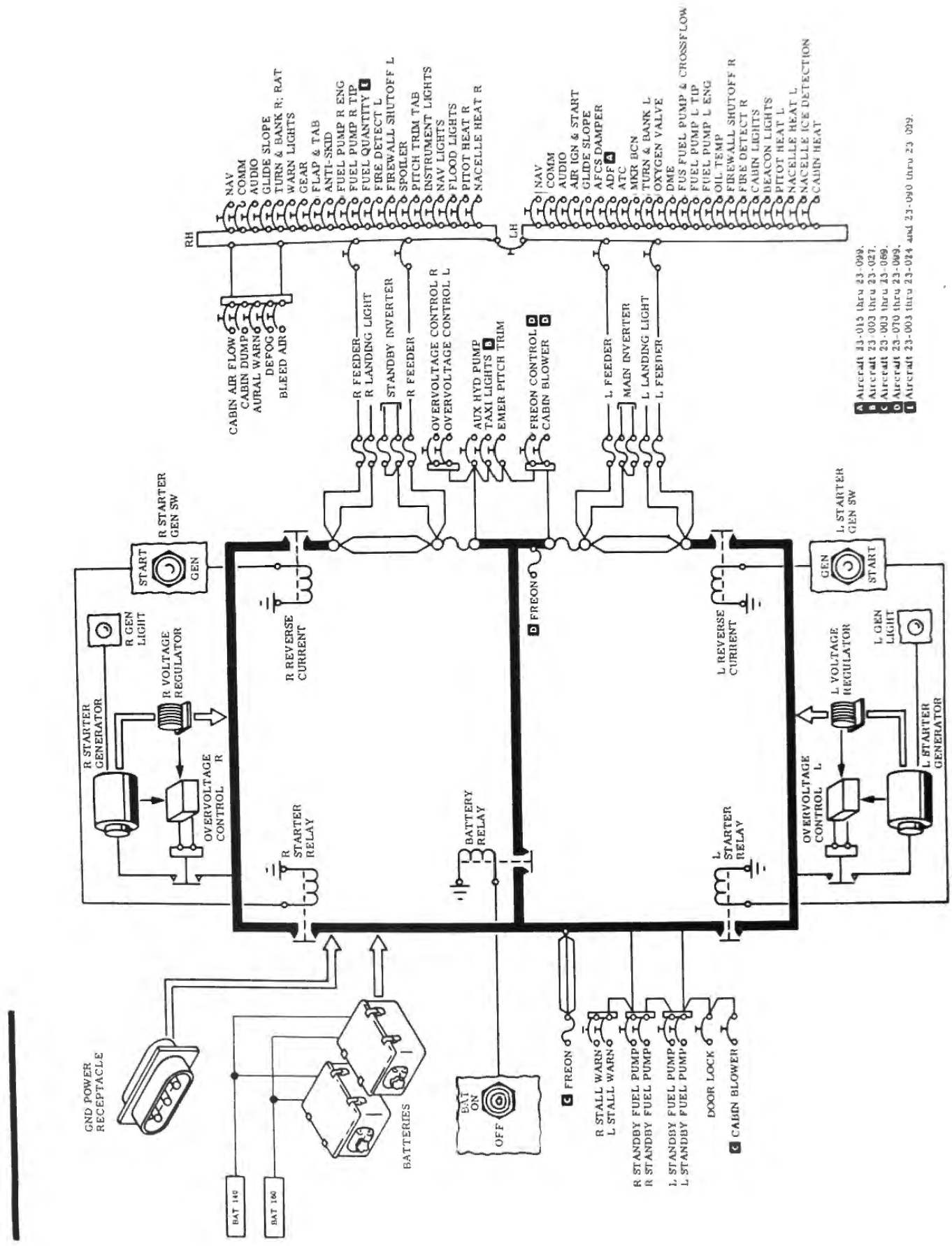

Figure 7-3. DC Power Distribution

DC GENERATOR SYSTEM. DC power generation is provided by a 400-amp engine-driven starter-generator installed on each engine. Each generator system consists of a starter-generator, a voltage regulator, an overvoltage control box, a START-OFF-GEN switch, an ammeter, a DC voltmeter, and [A] a reverse current relay and paralleling relay ([B] a generator control box). In addition, both generator systems are connected through an equalizer circuit. The equalizer circuit serves two functions. When one generator is on the line and the second generator switch is set to GEN, the equalizer circuit acts to create the differential in voltage (in the proper direction) necessary for the second generator to come on the line. When both generators are functioning and on the line, the equalizer circuit acts to equalize the load between both units.

a. Operation. When the starter switch is set to START, the starter relay is energized to supply power to the starter winding of the starter-generator. When engine operation becomes self-sustaining and the starter switch is released, the starter relay is de-energized. Engine rpm acceleration raises generator voltage output up to the regulator setting (28.5 volts). Whenever generator voltage exceeds bus voltage, with the generator switch on, the differential voltage coil within the reverse current relay will connect the generator to the bus. The corresponding ammeter will then indicate the generator amperage output. The voltage regulator equalizer coils are connected to parallel the generators by making the effective regulator voltage a function of equally divided current. The paralleling circuit is disconnected when only one generator switch is turned on.

STARTER GENERATORS. A starter generator, located on each engine, is used as a starter until the engine has accelerated to operational speed and then it acts as a generator supplying 28-volt DC power to the aircraft electrical system. Starter generator cooling is provided by flexible ducting from the nacelle nose cone airscoop.

STARTER-GENERATOR BRUSH WEAR CHECK. (See figure 7-3A.) Check each starter-generator brush as follows:

a. Remove lower engine nacelle.
b. Remove starter-generator from engine. (Refer to STARTER-GENERATOR REMOVAL, this section.)
c. Remove brush cover from starter-generator.
d. Insert spring hook (Bendix P/N QB80277-1) into brush spring scroll and pull spring clear of brushes.

CAUTION

If brushes are to be reinstalled, be sure brushes are returned to the holder from which removed.

e. Remove brushes from holder.
f. Measure brush extension beyond edge of brush attach rivet.
g. If brush extension is 0.30 or less, brushes should be replaced. Refer to Bendix Starter-Generator Technical Manual Maintenance Instructions Publication No. R681-10, Bendix Electrical Power Division, Eatontown, New Jersey, for instructions on brush replacement, armature inspection and brush seating.

CAUTION

If brushes are not properly installed in brush holder, electrical shorting of brushes could result.

h. If brushes are serviceable, pull spring clear of brushes using spring hook and insert brushes into holder, making certain of proper seating.
i. Install brush cover on starter-generator.
j. Install starter-generator on engine. (Refer to STARTER-GENERATOR INSTALLATION, this section.)
k. Install lower engine nacelle.

STARTER-GENERATOR REMOVAL.

a. Remove lower engine nacelle.
b. Loosen clamp and remove starter-generator cooling duct from starter-generator.
c. Remove terminal cover bolt and terminal cover from starter-generator. Disconnect electrical wiring.
d. Remove lockwire from clamp bolt and loosen bolt sufficiently to allow removal of starter-generator.
e. Remove starter-generator from engine.

STARTER-GENERATOR INSTALLATION.

a. Apply Plastilube No. 3 (manufactured by Warren Refining Co, Cleveland, Ohio) or Molylube 503 Grease (manufactured by Bel-Ray Co, Inc, P.O. Box 526, Farmingdale, N.J.) to male spline of starter-generator.
b. Install starter-generator and secure with clamp. Torque clamp bolt to 60 pound-inches.
c. Connect wiring to starter-generator terminals. (Refer to applicable wiring diagram, Section IX.)
d. Install terminal cover and secure with terminal bolt.
e. Install starter-generator cooling duct and secure with clamp.
f. Perform operational check of starter-generator. (Refer to Airplane Flight Manual for engine starting procedure.)
g. Install lower engine nacelle.

GENERATOR CONTROL PANEL [A]. (See figure 7-4.) The generator control panel, attached to the aft side of frame 24, provides mounting provisions for various electrical relays and circuit breakers. Access to the control panel is gained through the tailcone access door.

GENERATOR CONTROL BOX [B]. (See figure 7-4.) The generator control box serves as the central control unit for various DC system functions. The control box incorporates the starter relay, battery relay, reverse current relay, and paralleling relay functions. The generator control box is located in the tailcone equipment section and is accessible through the tailcone access door.

[A] Aircraft 23-003 thru 23-069.
[B] Aircraft 23-070 thru 23-099.

Learjet Temporary Service Manual Revision

SERVICE MANUALS AFFECTED: Gates Learjet Models 23, 24, 24B, 24D, 25, 25B/C Including United Kingdom 25B/C.

FILING INSTRUCTIONS: File this temporary revision adjacent to the page as listed below and retain until further notice.

Model 23	- File adjacent to page 7-6.
Model 24	- File adjacent to page 7-7.
Model 24B	- File adjacent to page 7-12.
Model 24D	- File adjacent to page 7-22.
Model 25	- File adjacent to page 7-10A.
Model 25B/C	- File adjacent to page 7-20.

REASON: To clarify installation of starter-generator and Q.A.D. clamp to prevent possible damage to drive spline.

INSTRUCTIONS: Revise Starter-Generator installation procedure and add detail as shown:

STARTER-GENERATOR INSTALLATION.

CAUTION

Assure that both splines are clean before applying new grease. This will prevent contamination of new grease.

a. Apply Mobil Grease No. 29 or Braycote 664S Grease (Bray Oil Co.) to male spline of starter-generator.

Note

- It is recommended that a new starter-generator clamp be installed when the starter-generator is replaced.

- To prevent possible damage to the starter-generator drive spline, it is important to assure that the starter-generator adapter plate and clamp are clean. Assure that the starter-generator is properly seated when the clamp is torqued.

b. Assure the starter-generator adapter plate and Q.A.D clamp are free of any foreign material.

c. Install starter-generator on engine. Check to assure that edge of clamp and the adjacent edge of the groove in the generator housing are parallel and that the space between these edges is approximately 1/16 inch.

January 30, 1976

d. As clamp is tightened, move the end of the starter-generator slightly to assure no binding occurs.

e. Torque clamp to 60 inch-pounds and safety wire. Check that space between ends of clamp is between 1/32 to 9/32 inch.

f. Connect wiring to starter-generator terminals. (Refer to applicable wiring diagram, Section IX.)

g. Install terminal cover and secure with attach parts.

h. Install starter-generator cooling duct and secure with clamp.

i. Connect aircraft batteries and secure tailcone access door.

j. Perform operational check of starter-generator. (Refer to Airplane Flight Manual for engine starting procedures.)

k. Install lower engine nacelle.

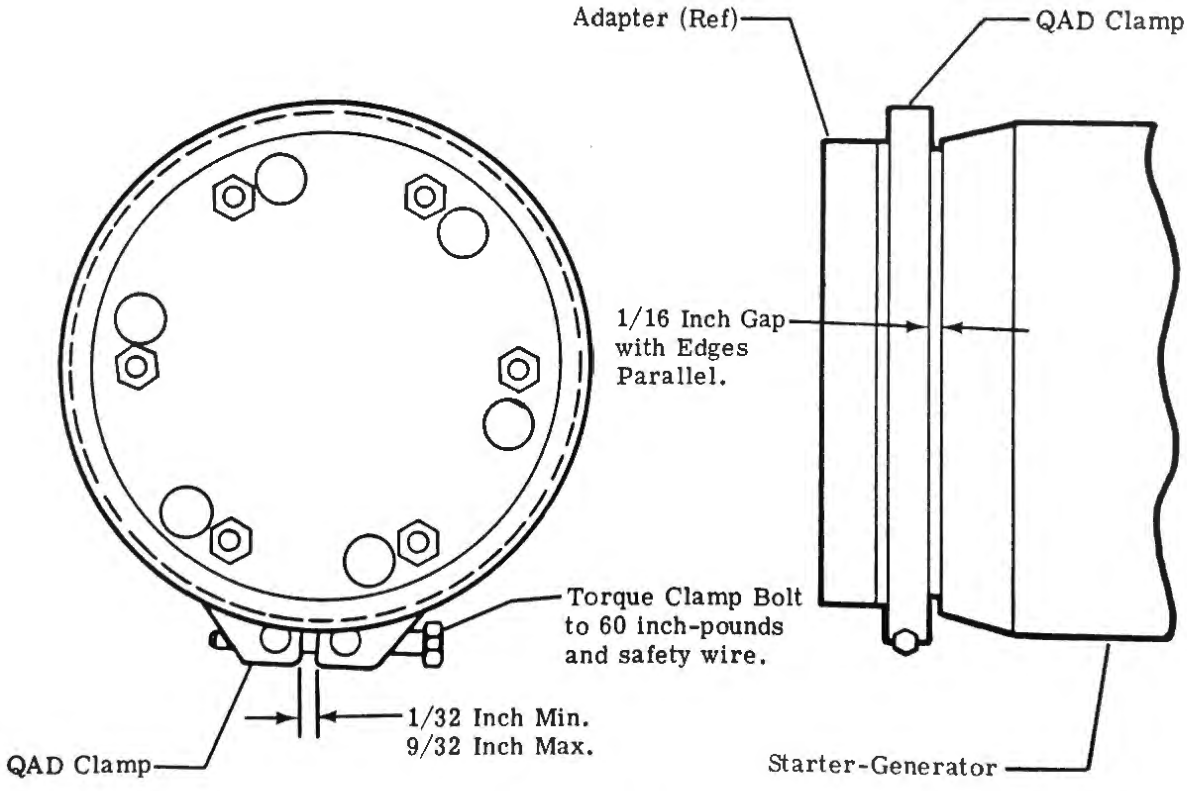

Detail A

OVERVOLTAGE CONTROL BOX. (See figure 7-4.) Two overvoltage control boxes (one for each generator system) are installed in the tailcone equipment section. The overvoltage control box is a sensing device which monitors the voltage output of the starter-generator and voltage regulator. The unit is inoperative until an overvoltage condition exists at which time the sensing device will completely disconnect the affected system.

REVERSE CURRENT CUTOUT RELAYS. (See figure 7-4.)

a. Undervoltage, reverse current, reverse polarity, and differential protection in each generator is provided by the reverse current cutout relay. The relays, rated at 300 amps, are located on the aft fuselage generator control panel. Access is through the tailcone access door.

b. Operation. The reverse current cutout relays

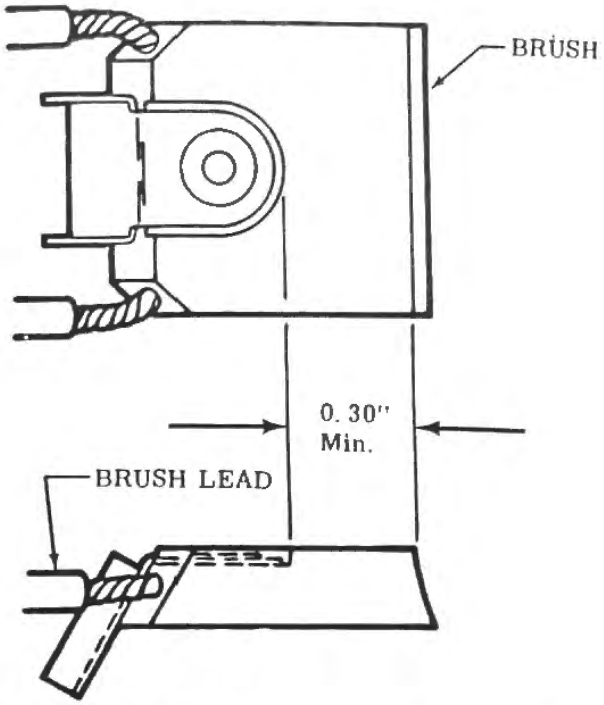

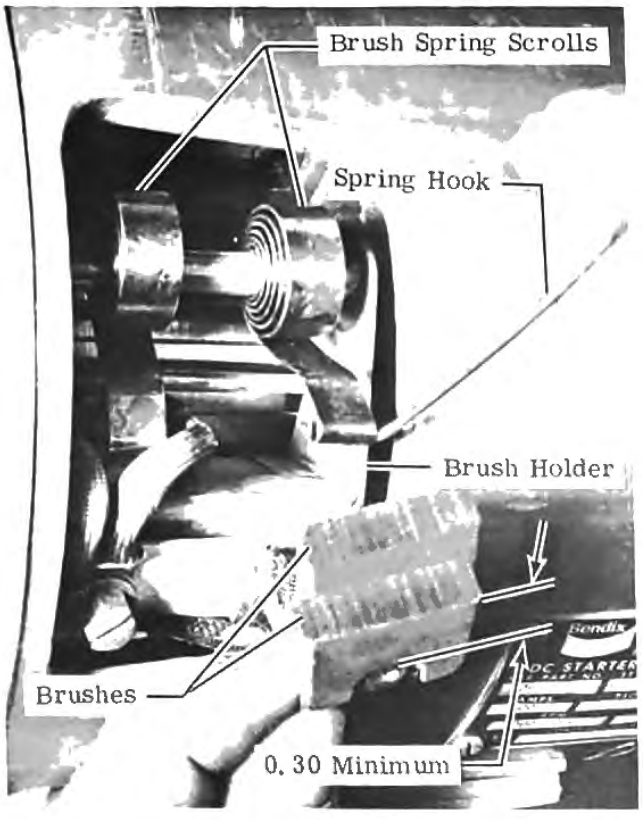

BRUSH REMOVAL

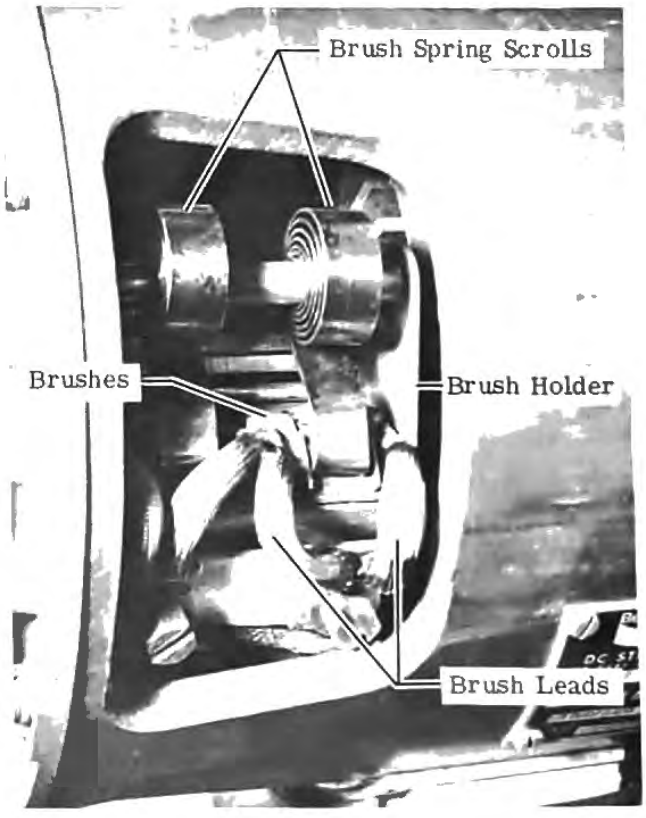

BRUSH INSTALLATION

Figure 7-3A. Starter-Generator Brush Wear Check

complete a circuit from the generator to the bus when a control circuit is selected and the generator voltage exceeds that of the bus by 0.35 to 0.65 volt and is at least 22 volts magnitude. The main contacts open if current flow toward the generator reaches 16 to 25 amps or if the control circuit is opened.

REMOVAL AND INSTALLATION OF REVERSE CURRENT CUTOUT RELAYS.

a. Removal of Reverse Current Relays
   1. Disconnect all wiring.
   2. Remove attaching screws.
   3. Remove relay from aircraft.

b. Installation of Reverse Current Relays
   1. Install relay.
   2. Replace and tighten attaching screws.
   3. Connect all wiring in accordance with Section IX.

VOLTAGE REGULATORS. (See figure 7-5.) Two voltage regulators are located aft of frame 24. Access is through the tailcone access door. Each unit consists of a carbon pile regulator, a resistor, a rheostat assembly, and a voltage regulator base. All electrical connections are completed when the voltage regulator is pulled into the voltage regulator base to which all wiring is connected.

REMOVAL AND INSTALLATION OF VOLTAGE REGULATORS.

a. Removal of Voltage Regulators
   1. Release retaining clip and lift voltage regulator from base.

b. Installation of Voltage Regulators
   1. Install voltage regulator on base and secure with retaining clip.

REMOVAL AND INSTALLATION OF VOLTAGE REGULATOR BASE.

a. Removal of Voltage Regulator Base
   1. Disconnect all external wiring.
   2. Remove nuts and washers securing base to panel.
   3. Lift voltage regulator base from panel.

b. Installation of Voltage Regulator Base
   1. Install voltage regulator base on panel.

Learjet Temporary Service Manual Revision

SERVICE MANUALS AFFECTED: Gates Learjet Model 23, 24, 24B and 24D/E/F Service Manuals.

FILING INSTRUCTIONS: Insert as listed below and retain until further notice.

Model 23	- Insert adjacent to page 7-7.
Model 24	- Insert adjacent to page 7-10.
Model 24B	- Insert adjacent to page 7-10
Model 24D/E/F	- Insert adjacnet to page 7-21.

REASON: To add torque values to Generator Control Box.

INSTRUCTIONS:

Model 23	- Add the following CAUTION to Figure 7-4.
Model 24	- Add the following CAUTION to Figure 7-6.
Model 24B	- Add the following CAUTION to Figure 7-6.
Model 24D/E/F	- Add the following CAUTION to Figure 7-13.

CAUTION

Use care when tightening terminal nuts. First determine whether the stud is silver-plated copper or steel. Torque nuts on 5/16 and 3/8" silver-plated studs to 38 (±2) inch-pounds. Torque nuts on steel studs to 75 (±3) inch-pounds.

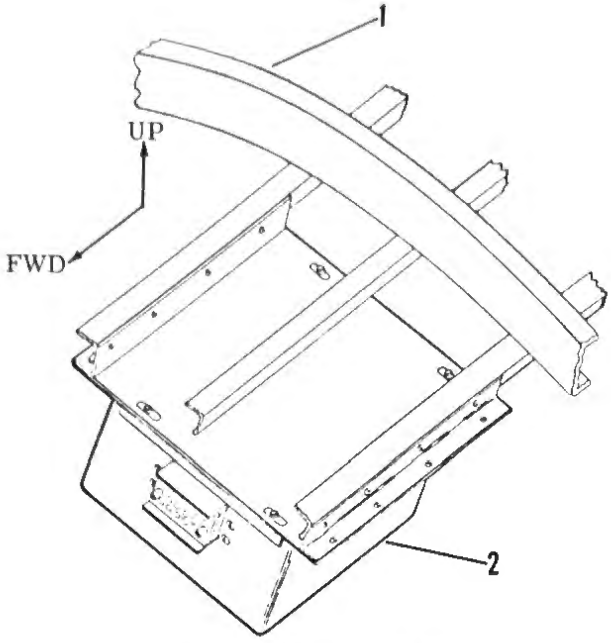

Aircraft 23-003 thru 23-099

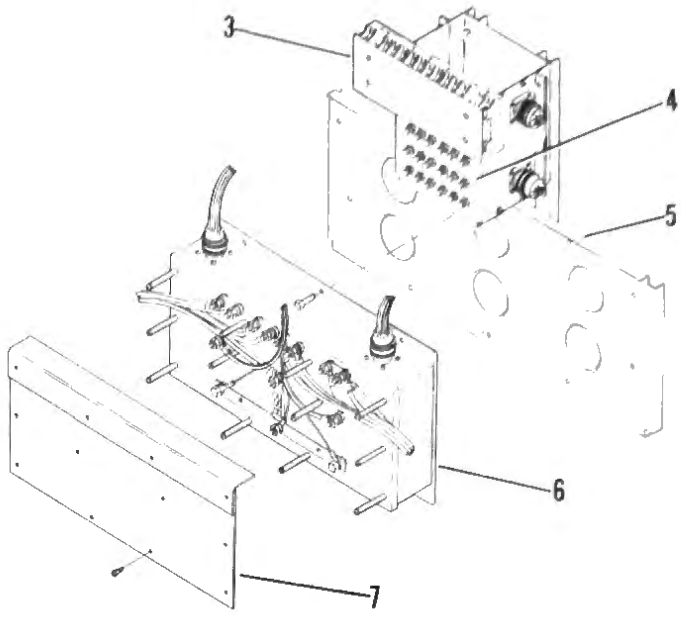

Aircraft 23-070 thru 23-099

Aircraft 23-003 thru 23-069

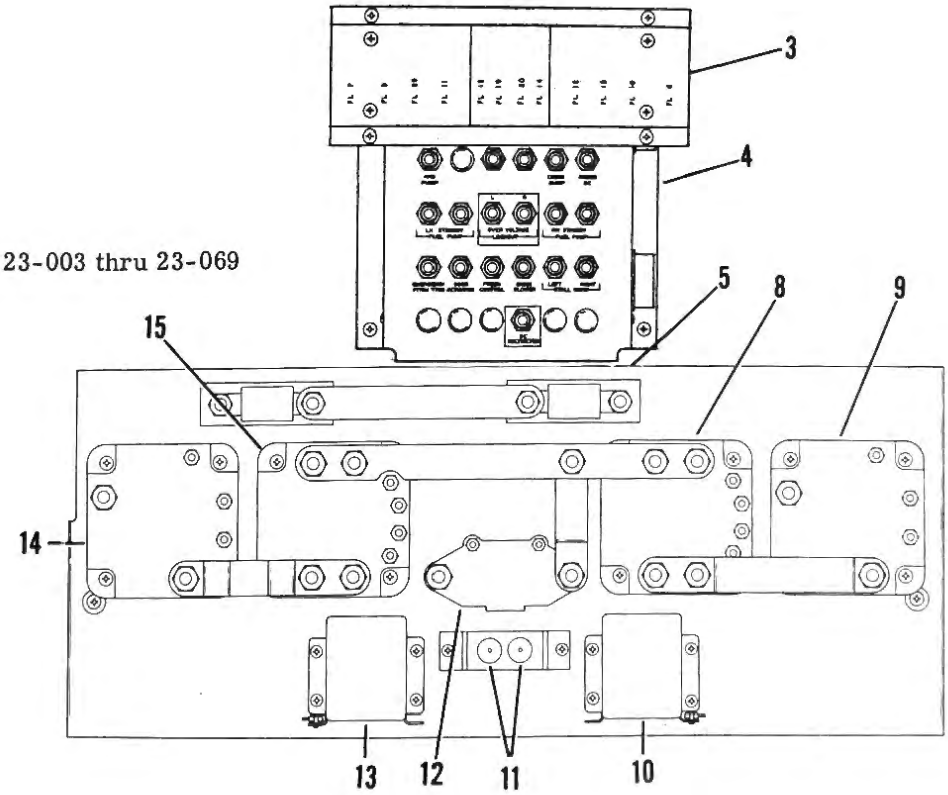

1. Frame 25
2. Overvoltage Control Box
3. Current Limiter Panel
4. Circuit Breaker Panel
5. Generator Control Panel
6. Generator Control Box
7. Cover (Generator Control Box)
8. Start Relay - Right
9. Reverse Current Cutout Relay - Right
10. Paralleling Relay - Right
11. Diodes
12. Battery Relay
13. Paralleling Relay - Left
14. Reverse Current Cutout Relay - Left
15. Start Relay - Left

Figure 7-4. Generator Control Panel and Box Installation

1. Voltage Regulator
2. Voltage Regulator Base
3. Retaining Clips
4. Voltage Adjusting Potentiometer

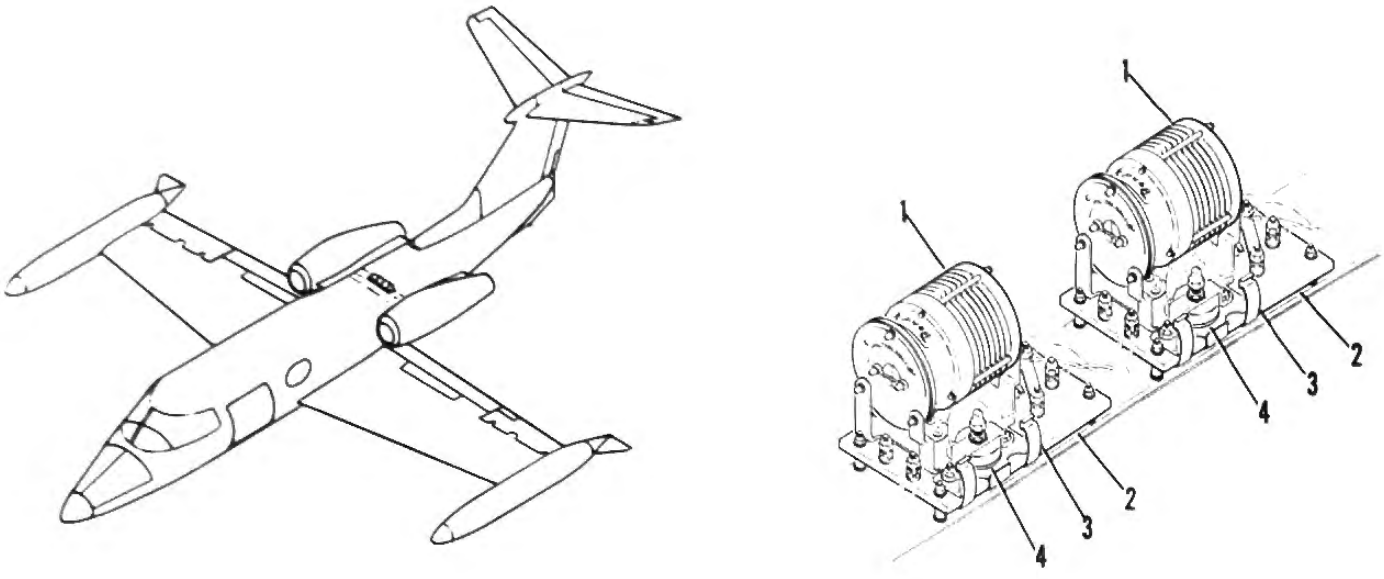

Figure 7-5. Voltage Regulator Installation

VOLTAGE REGULATOR ADJUSTMENT. (See figure 7-5.)

CAUTION

- Remove fuse from radar transmitter prior to performing this procedure.
- The air bleed switch must be set to OFF to prevent damage to the air conditioning system.

Note

The batteries should be fully charged prior to performing this procedure.

a. Start both aircraft engines in accordance with Airplane Flight Manual. Stabilize engines at 60% rpm and apply an aircraft system load of 30 to 50 amperes. This may be accomplished by:
1. Switching on electrical systems until both DC ammeters read between 30 and 50 amperes.
2. Allowing a minimum of 5 minutes operation to stabilize voltage.

b. Set the RH GEN switch to OFF. Do not shut down engine.

c. Connect a Simpson 260 voltmeter or equivalent between terminal "C" of the LH voltage regulator and aircraft ground and adjust the voltage regulator to 28.5 (±0.2) volts.

d. Increase engine rpm to 90%. Maintaining systems load as described in step a, allow a minimum of 5 minutes for voltage to stabilize and recheck voltage. Maximum allowable voltage will be 29.4 volts.

e. Reduce LH engine to 60% rpm and set LH GEN switch to OFF. Set RH GEN switch to GEN and, using the above procedure, set RH regulator.

f. Reduce RH engine to 60% rpm. Set LH GEN switch to GEN. Recheck both regulators according to steps c and d while both generators are functioning. If an appreciable variation occurs (±2.0 volts), repeat the procedure.

BATTERY POWER SYSTEM. The battery power system consists of two batteries, a battery switch, and a battery relay. Setting the battery switch to ON energizes the battery relay and connects battery power to the left and right starter generator buses for distribution to the aircraft DC electrical system.

BATTERY SERVICING. For instructions relative to determining state of battery charge, battery charging, battery discharging, battery cleaning and checking battery electrolyte level, refer to Section I.

BATTERIES. (See figure 7-6.) Battery power is supplied by two [A] 23 ampere-hour 24-volt 20-cell ([B] 21 ampere-hour 24-volt 19-cell) nickel cadmium batteries. The batteries, located aft of frame 24 below the generator control panel, are of sufficient capacity to take care of normal requirements. Each battery consists of a steel case containing [A] 20 cells ([B] 19 cells). A removable cover, secured by four latch-type fasteners, complete the unit enclosure. The batteries are vented overboard through a hose connected to the outboard side of the batteries. The inboard vents are plugged.

REMOVAL AND INSTALLATION OF BATTERIES

a. Removal

WARNING

Remove the quick-disconnects from both batteries even though only one battery is to be removed. Battery voltage will feed back from the connected battery and arcing will occur if the quick-disconnect is inadvertently shorted to the aircraft structure.

1. Lower tailcone access door.
2. Disconnect both battery quick-disconnects.
3. Disconnect battery overheat warning system plug located directly below battery quick-disconnects.
4. Loosen clamps and remove overboard vent hoses.
5. Loosen and remove retaining bar bolts.
6. Remove battery from aircraft.

b. Installation

1. Inspect battery to assure no damage has occurred during shipment.
2. Check all electrical connections for tightness.

CAUTION

Poor electrical contact could result in damage to the battery.

3. Clean battery compartment.
4. Install battery.
5. Install retaining bar and bolts.
6. Connect overboard vent hoses and tighten clamps.
7. Connect battery overheat warning system plug.
8. Connect battery quick-disconnect and safety wire per double twist method.
9. Secure tailcone access door.

BATTERY OVERHEAT WARNING SYSTEM. The battery overheat warning system is installed in the aircraft to alert the pilot of impending battery overheat allowing corrective action to be taken to prevent a possible thermal runaway of the batteries. The system consists of two thermoswitches in each battery, a printed circuit board on the back side of the pilot's subpanel and two overheat warning lights. The overheat warning lights are located on the pilot's subpanel. When the battery reaches 140°F the lo-limit thermoswitch energizes the BAT 140 warning light. If the battery temperature reaches 160°F the hi-limit thermoswitch energizes the BAT 160 warning light.

Note

If at any time during flight or ground operation, including engine start, either overheat warning light comes on, then the battery discharge-recharge reconditioning cycle must be performed in accordance with Section I.

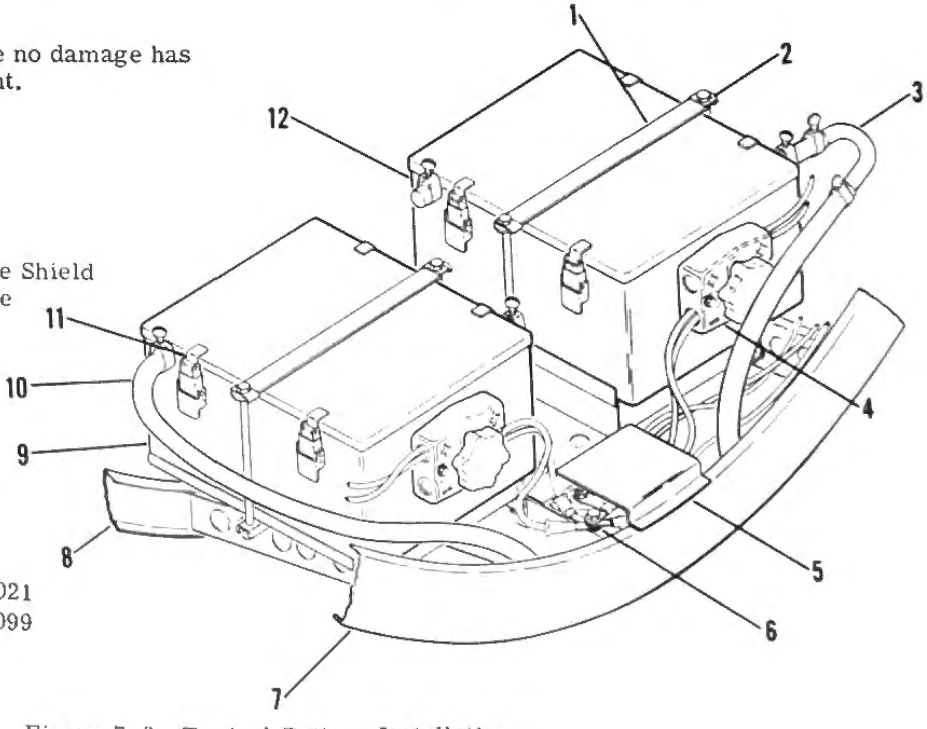

1. Retainer Bar
2. Keeper
3. Overboard Vent
4. Battery Quick Disconnect
5. External Power Receptacle Shield
6. External Power Receptacle
7. Frame 25
8. Frame 24
9. Battery - LH
10. Overboard Vent
11. Latch
12. Battery - RH

[A] Aircraft 23-003 thru 23-021
[B] Aircraft 23-022 thru 23-099

Figure 7-6. Typical Battery Installation

AUXILIARY BATTERY SYSTEM. (See figure 7-7.) Auxiliary battery power is supplied by a 3.0 ampere-hour 28-volt nickel cadmium dry cell battery. The battery, installed on the floorboards beneath the divan seat, consists of a steel case containing 20 nickel cadmium dry cells, an inverter system, and a cover secured by four screws. The battery is secured to the mounting bracket by two screws. Components of the auxiliary battery system are: a battery, two switches, and an indicator light.

Note

The following procedures describe operation of the auxiliary battery if the complete auxiliary battery system is installed. However, some aircraft do not have the complete system installed, therefore some portions of these procedures do not apply to all aircraft and should be disregarded.

a. Normal Operation. (Refer to Section IX for wiring diagram.) During normal operation, 28-volt DC is being supplied from the main battery system to the auxiliary battery system. The 28-volt DC provides a trickle charge for the auxiliary battery. When the AUXILIARY BATTERY GYROS switch is set to ON, 28-volt DC from the auxiliary battery is applied to the pilot's audio panel, ADF, transceiver, nose wheel steering relay, wheel master switch, and the auxiliary battery inverter system. The auxiliary battery inverter system provides 115-volt 400-cycle 250-VA to drive the attitude and directional gyros.

b. Emergency Operation. During an emergency, the auxiliary battery, through a diode network, is providing power to the pilot's audio panel, ADF, transceiver, nose wheel steering relay, wheel master switch, directional and attitude gyros. The momentary type SPOILERS, FLAPS, GEAR CONTROL switches must be held to the ON position when power is desired for the gear control box, spoiler switch and flap switch.

AUXILIARY BATTERY REMOVAL AND INSTALLATION. (See figure 7-8.)

a. Removal.
   1. Remove divan seat.
   2. Disconnect electrical plug.
   3. Remove attaching screws and battery from aircraft.

b. Installation.
   1. Secure battery to supports with screws.
   2. Connect electrical plug and install divan seat.

EXTERNAL POWER. The aircraft includes provisions for connecting an external power source of 28-volt DC. The external power receptacle is located immediately forward of the tailcone access door. The positive terminal in the external power receptacle is connected directly to the starter bus by three AWG 4 cables. It is not necessary to position any aircraft switches to apply external power to the DC distribution system.

Note

Limit external power unit output to a maximum of 1000 amps when connected to this aircraft.

AC POWER DISTRIBUTION. (See figure 7-10.)

AC POWER SYSTEM. (Refer to Section IX for wiring diagram.) Alternating current for the AC electrical instruments and the electronic equipment is provided by two inverters. Components of the AC system consist of two inverters, two power relays, four current limiters, two step-down transformers, and a switching relay.

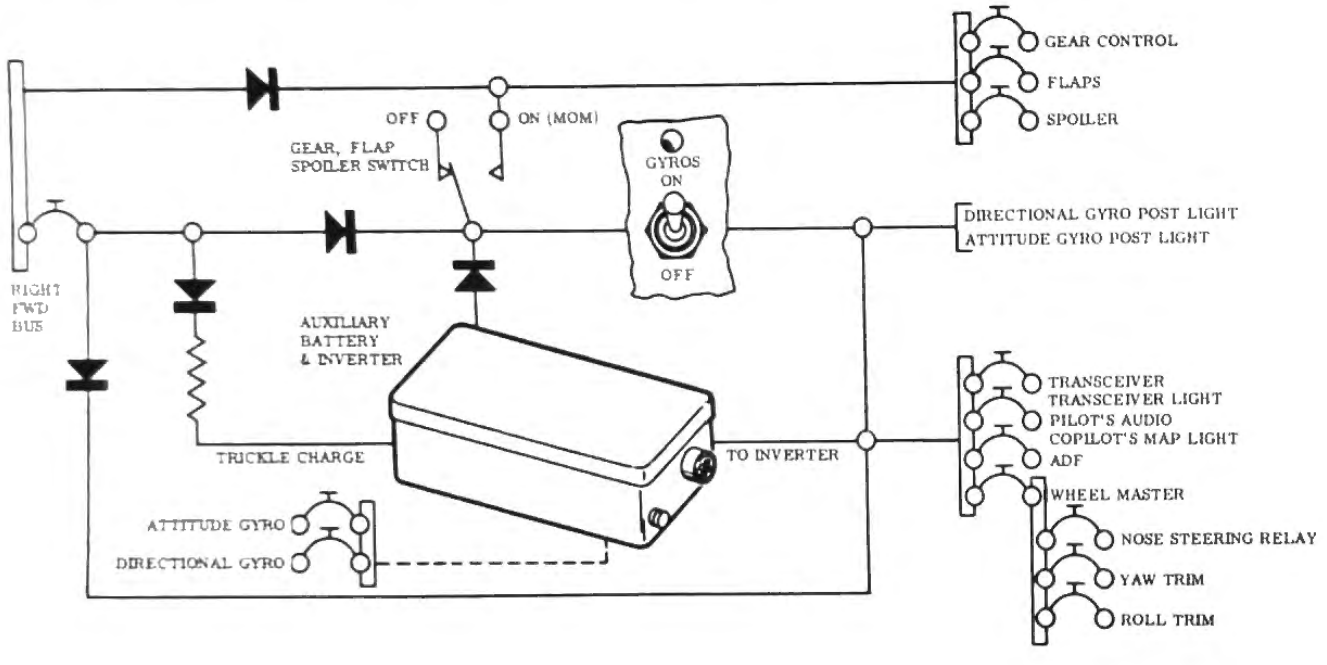

Figure 7-7. Auxiliary Battery System Schematic

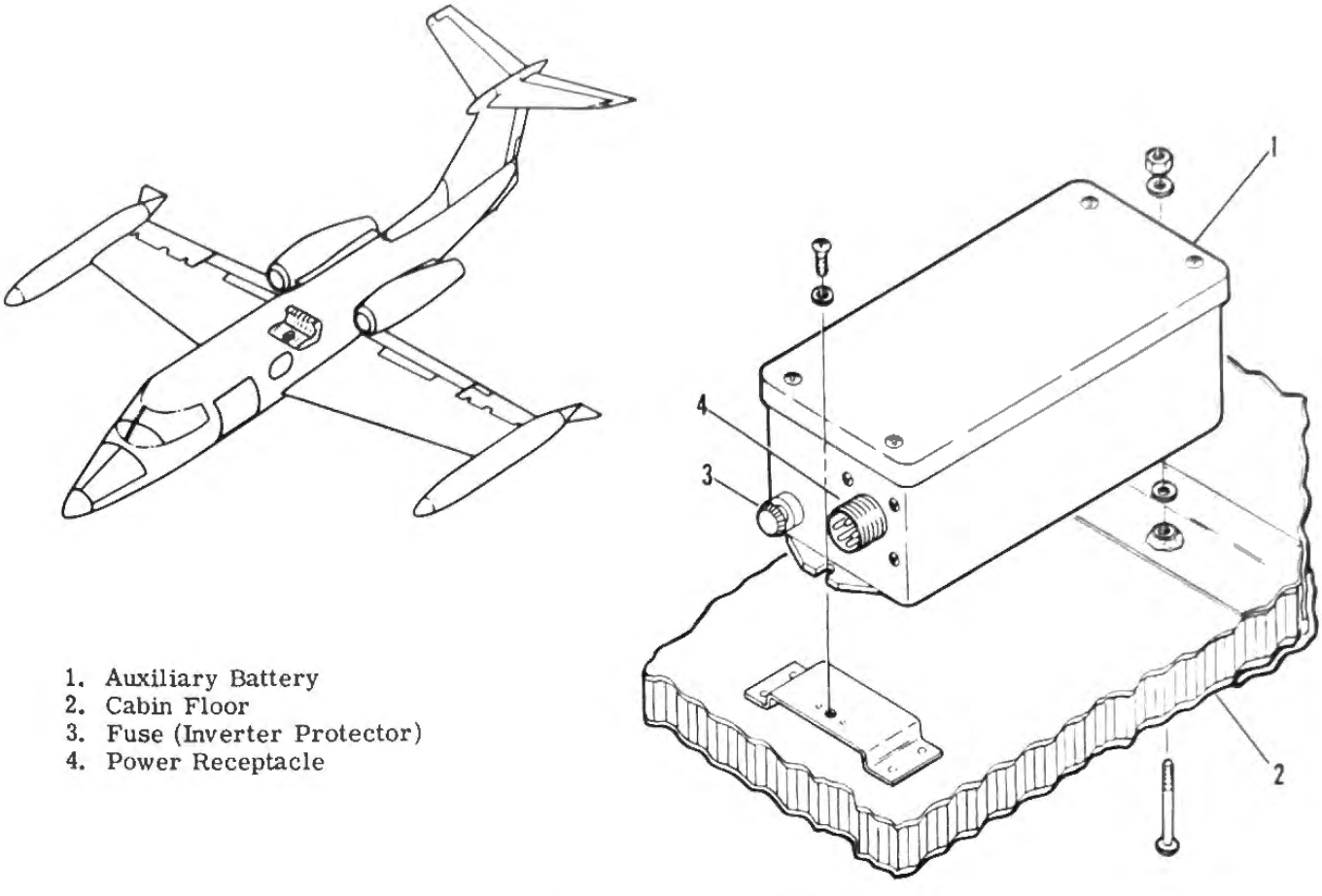

1. Auxiliary Battery
2. Cabin Floor
3. Fuse (Inverter Protector)
4. Power Receptacle

Figure 7-8. Auxiliary Battery Installation

INVERTERS. (See figure 7-9.) The inverters, installed in the tailcone equipment section, are capable of delivering 115-volt 400-cycle AC at 750 VA.

a. Normal Operation. AC power is normally provided by the main inverter. With the inverter switch set to MAIN, 28 vdc is applied to the main inverter through two current limiters and a power relay. AC output is applied via the switching relay to the primary AC bus and AC voltmeter. In addition, the AC output is applied to (one) step-down transformer. The transformer reduces this voltage to 26 vac and applies it to the 26 vac bus via the switching relay. The radar is operated by the standby inverter.

b. Emergency Operation. In case of main inverter failure, the inverter switch should be set to STANDBY. With the switch in this position, the secondary inverter power relay and the inverter switching relay are energized, allowing the standby inverter to supply AC power to all systems with the exception of radar. The radar set is inoperative during standby inverter operation.

REMOVAL AND INSTALLATION OF INVERTERS.

a. Removal
   1. Disconnect all wiring.
   2. Remove attaching bolts and nuts.
   3. Remove inverter from aircraft.

b. Installation
   1. Install inverters.
   2. Install and tighten attaching bolts and nuts.
   3. Connect all wiring in accordance with Section IX.

STEP-DOWN TRANSFORMER. (See figure 7-9.) The step-down transformer(s), located on the aft side of frame 24, reduces a portion of the 115-volt AC inverter output to 26-volt AC. The 26-volt AC powers the AC instruments and [A] instrument lights.

REMOVAL AND INSTALLATION OF STEP-DOWN TRANSFORMER(S).

a. Removal
   1. Disconnect all wiring.
   2. Remove attaching screws.
   3. Remove transformer(s) from aircraft.

b. Installation
   1. Install transformer(s).
   2. Install attaching screws and tighten.
   3. Connect wiring in accordance with Section IX.

INVERTER SWITCHING RELAY. (See figure 7-9.) The inverter switching relay, located in the tailcone, is energized when the inverter (MAIN-OFF-STANDBY) switch is set to STANDBY. When energized, the relay allows AC voltage from the standby inverter to be distributed to the aircraft AC components. When the relay is de-energized (inverter switch set to

[A] Aircraft 23-003 thru 23-014.

1. Step Down Transformer
2. Main Inverter
3. Standby Inverter
4. Power Relay (Main Inverter)
5. Power Relay (Standby Inverter)
6. Switching Relay

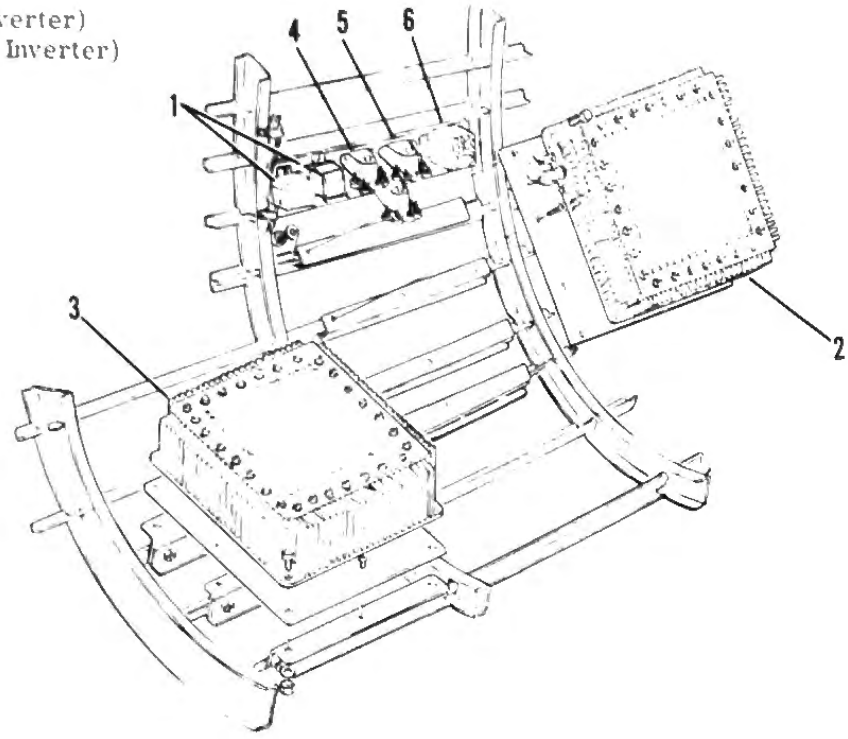

Figure 7-9. Inverter Installation

MAIN), the standby inverter is inoperative and the main inverter is supplying aircraft AC power.

REMOVAL AND INSTALLATION OF INVERTER SWITCHING RELAY.

a. Removal
   1. Disconnect all wiring.
   2. Remove attaching screws.
   3. Remove relay from aircraft.

b. Installation
   1. Install relay.
   2. Install and tighten attaching screws.
   3. Connect wiring in accordance with Section IX.

INVERTER POWER RELAYS. (See figure 7-9.) A power relay is installed for each inverter. The inverter power relays are located in the tailcone. The relays, when energized by the inverter (MAIN-OFF-STANDBY) switch, allow 28-volt DC to power the applicable inverter.

REMOVAL AND INSTALLATION OF INVERTER POWER RELAYS.

a. Removal
   1. Disconnect all wiring.
   2. Remove attaching screws.
   3. Remove relay from aircraft.

b. Installation
   1. Install relay.
   2. Install screws and tighten.
   3. Connect all wiring in accordance with Section IX.

CIRCUIT BREAKERS. (See figure 7-11.) Push-pull circuit breakers protect all electrical systems. The circuit breakers are located on the cockpit circuit breaker panel and on the generator control panel in the aft fuselage. All circuit breakers are identified as to system and amperage rating.

SWITCH PANEL [A]. (See figure 7-12.) A switch panel on the left side of the cockpit houses all electrical switches except those on the instrument panel and the spoiler and flap switches located on the center pedestal. The instrument panel switches consist of the landing gear control switch, cabin pressurization system switches, stall warning switches, engine firewall shutoff switches, and fuel quantity selector switch. All switches are identified as to system affected.

SPEAKERS. (Refer to Section X for wiring diagram.) The speakers, located in the cockpit and the aft portion of the upper control panel, are operated by a selector switch on the instrument panel.

[A] Aircraft 23-003 thru 23-014.

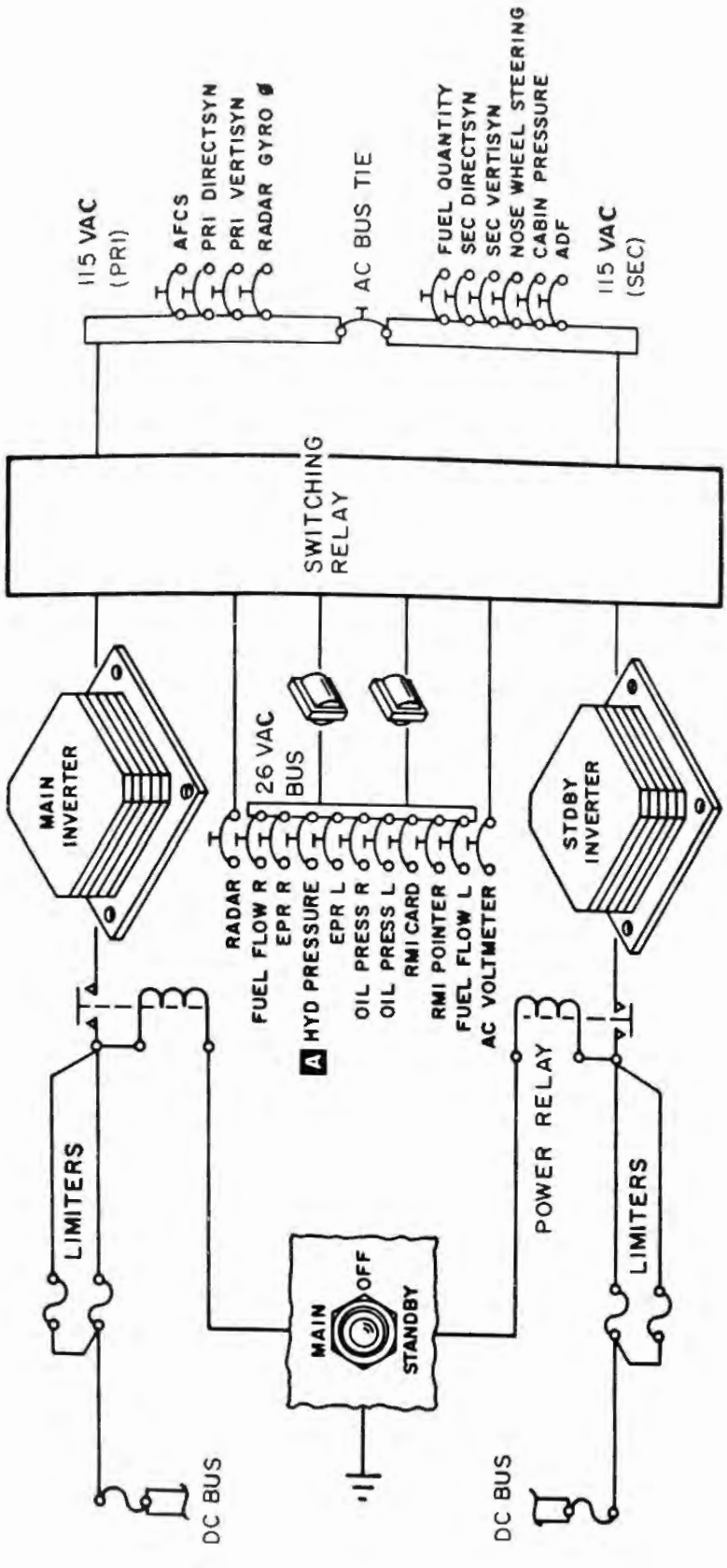

A Aircraft 23-003 thru 23-014

Figure 7-10. AC Power Distribution

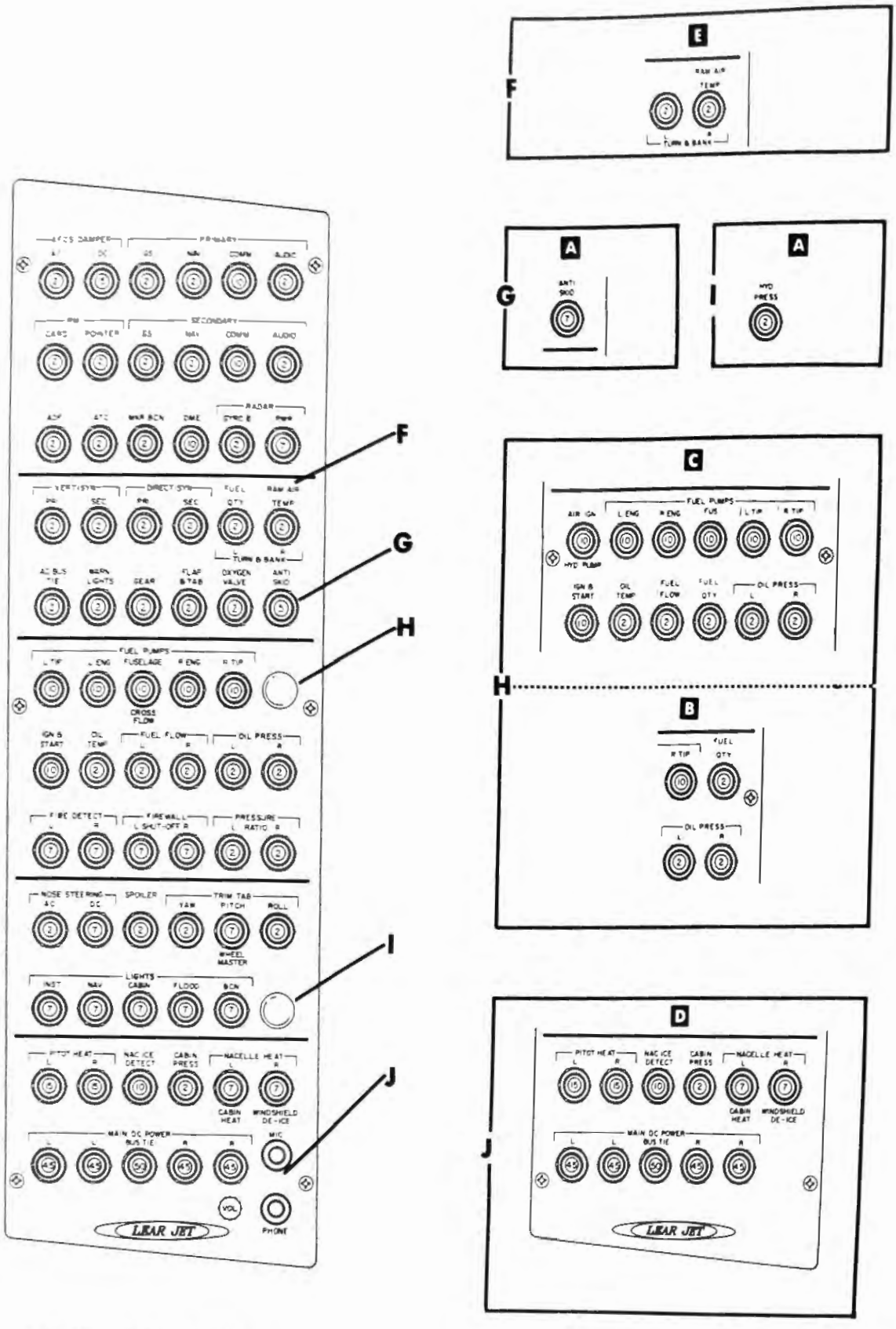

A Aircraft 23-003 thru 23-014
B Aircraft 23-025 thru 23-069
C Aircraft 23-070 thru 23-099
D Aircraft 23-015 thru 23-099
E Aircraft 23-025 thru 23-099

Figure 7-11. Circuit Breaker Panel

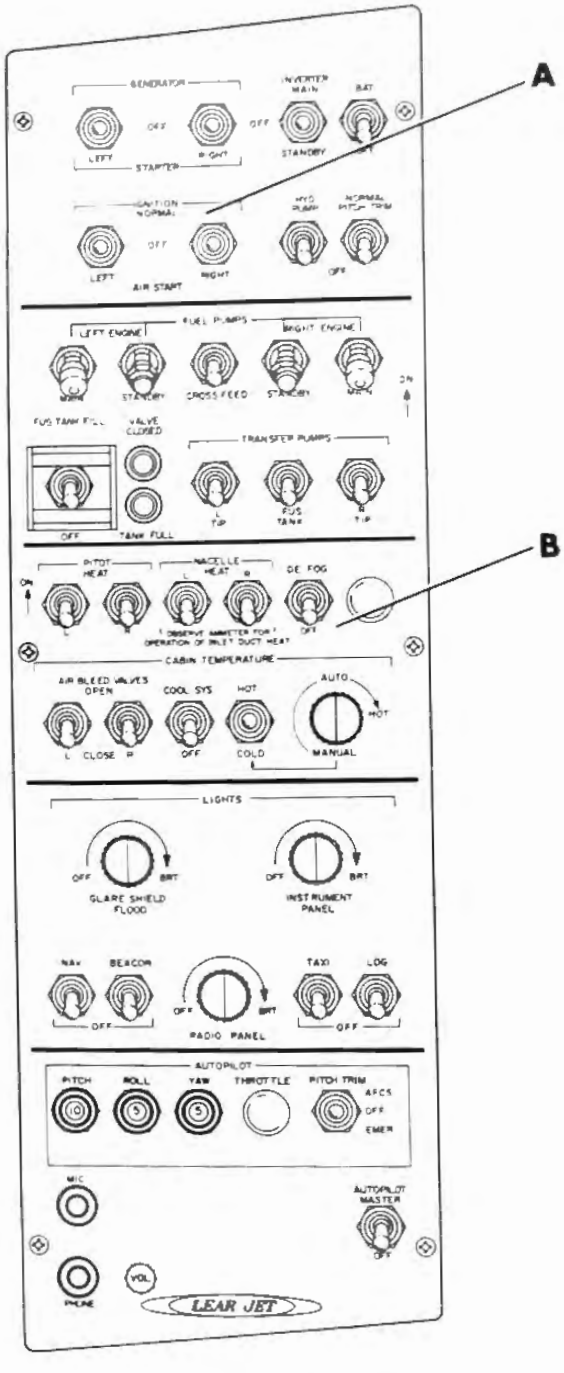

Aircraft 23-003 thru 23-014

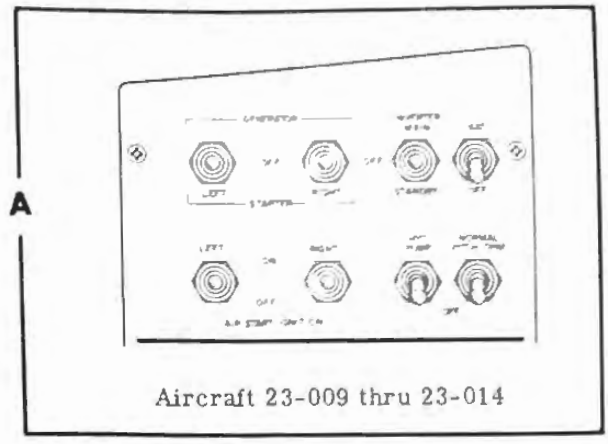

Aircraft 23-009 thru 23-014

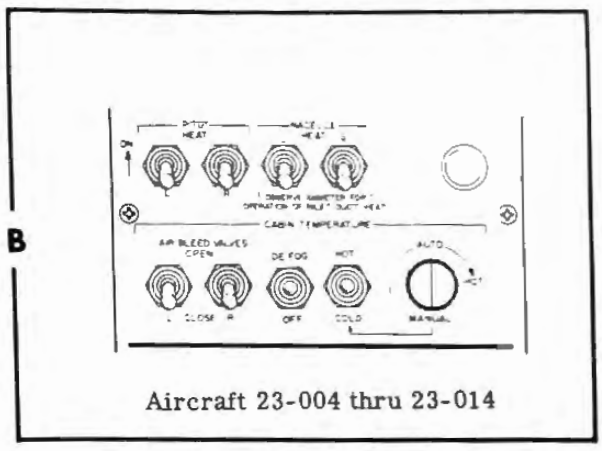

Aircraft 23-004 thru 23-014

Figure 7-12. Switch Panel

REMOVAL AND INSTALLATION OF SPEAKERS.

a. Removal (Aft cabin upper center panel)
   1. Remove upper center panel.
   2. Disconnect wiring.
   3. Remove attaching screws.
   4. Remove speakers from aircraft.

b. Installation (Aft cabin upper center panel)
   1. Install speaker and tighten attaching screws.
   2. Reconnect wiring.
   3. Replace upper center panel.

c. Removal (Cockpit) LH & RH
   1. Remove headliner.
   2. Remove attaching screws and lower speaker assembly.
   3. Disconnect wiring.
   4. Remove screws.
   5. Remove speaker.

d. Installation (Cockpit) LH & RH
   1. Install speaker and tighten screws.
   2. Reconnect wiring.
   3. Install speaker assembly and tighten screws.
   4. Replace headliner.

INTERIOR LIGHTING. (Refer to Section IX for Wiring Diagrams.)

a. Cabin Reading Lights are located throughout the cabin and controlled by integral switches on the light assembly.

b. Post and Panel Lights are located on the instrument panel and are controlled by the instrument panel light rheostat.

c. Pilot's and Copilot's Overhead Lights are located above the pilot's and copilot's seats and are controlled by the switch on the pilot's light assembly.

d. Glareshield Flood Lights are located beneath the glareshield and are controlled by the instrument panel flood rheostat.

e. Switch Panel Flood Light [A] is located on the switch panel and controlled by an integral switch on the panel.

f. Circuit Breaker Panel Flood Light is located on circuit breaker panel and controlled by an integral switch on the panel.

g. Map Reading Lights [A] are located on the left side of the pilot's seat and right side of the copilot's seat and are controlled by integral switches or rheostats on the light assembly.

h. Baggage Compartment Lights are located in the headliner of the baggage compartment and are controlled by a switch on the aft side of the cabin door.

i. Overhead Door Light is located in the center panel above the door and is controlled automatically by a switch on the upper door.

EXTERIOR LIGHTING. (Refer to Section IX for Wiring Diagram.)

a. Landing Lights are installed on each main landing gear. The lights (450-watt each) are controlled by a switch on the switch panel or pedestal.

Note

The landing light circuit is wired through the main landing gear down and locked switches which prevents the lights from operating when the main gear is retracted.

b. Navigation Lights are located in the tip tanks and tail stinger and are controlled by a switch on the switch panel or center pedestal.

CAUTION

Do not leave navigation lights on for extended periods of time while the aircraft is in the hangar. Without cooling air the tail navigation light may generate enough heat to distort the lens.

c. Taxi Lights are located in the tip tank or on each main gear and are controlled by a switch on the switch panel or pedestal.

d. Rotating Beacon Lights are located on the empennage bullet and bottom of the fuselage and are controlled by a switch on the switch panel or pedestal. The beacon lamps oscillate at 45 cycles per minute and flash at a rate of 90 per minute.

REMOVAL AND INSTALLATION OF EXTERIOR LIGHTS. (See figure 7-13.)

a. Landing Lights.
   1. Remove bolts attaching lamp housing to bracket.
   2. Remove lamp retainer from lamp housing.
   3. Remove lamp. Note position of letters DK on lamp lens.
   4. Disconnect wiring.
   5. Connect wiring.
   6. Install almp. Note position of letters DK on lamp lens.
   7. Install retainer.
   8. Install lamp housing.

b. Navigation Lights.
   1. Remove tip tank nose cone and/or tail stinger lens.
   2. Remove old bulb.
   3. Install new bulb.
   4. Install tip tank nose cone and/or tail stinger lens.

c. Taxi Lights.
   1. Remove tip tank nose cone.
   2. Remove retainer mounting bracket.
   3. Disconnect wiring.
   4. Remove lamp.
   5. Connect wiring.
   6. Install lamp.
   7. Install retainer.
   8. Install tip tank nose cone.

d. Rotating Beacon Lights.
   1. Remove lens.
   2. Remove bulb.
   3. Install bulb.
   4. Install lens.

[A] Aircraft 23-003 thru 23-014.

Learjet Temporary Service Manual Revision

MANUALS AFFECTED: Gates Learjet Models 23, 24 and 24D/E/F Service Manuals.

FILING INSTRUCTIONS: Insert as listed below and retain until further notice.

Model 23 - Insert adjacent to page 7-17.
Model 24 - Insert adjacent to page 7-26.
Model 24D/E/F - Insert adjacent to page 7-6A.

REASON: To incorporate static discharge wick maintenance practices.

INSTRUCTIONS: Add the following text and illustrations to Chapter 7.

STATIC DISCHARGING. (See figure 7-XX.) Maintenance practices for static discharging includes removal and installation of the wicks and bases, and functional testing of the static discharging wick installation. The resistance between the aircraft skin and the discharging base, and the resistance between the base and the wick is critical to prevent radio interference. Therefore, it is recommended that the static discharger wicks be functionally tested periodically. Wrench flats are provided on the wick retainer (metal portion of the wick assembly) to aid in removal and installation of the wick. Under no circumstances should leverage be applied to the plastic portion of the wick.

REMOVAL AND INSTALLATION OF STATIC DISCHARGING WICK. (See figure 7-XX.)

a. Remove static discharging wick.
   1. Using the wrenching flat on the wick retainer, unscrew the wick.

Note

If the wick has been broken off at the stud, the stud may be removed easily if heat is applied to the remaining portion of the stud. Heat will melt the retaining compound on the stud threads.

   2. Inspect discharger base to assure that there is no damage to base prior to installing new wick.
b. Install static discharging wick.
   1. Apply one drop of Loctite to the threads where it enters the base.
   2. Screw wick onto the base and, using wrenching flat on wick, tighten wick.

REMOVAL AND INSTALLATION OF TIP TANK FIN STATIC DISCHARGING BASE. (See figure 7-XX.)

a. Remove tip tank fin static discharging base.
   1. Drill out the four rivets attaching the base to the tip tank fin.
   2. Using extreme care not to damge tip tank fin skin, pry off discharger base.
b. Install Tip Tank Fin Static Discharging Base.
   1. Clean all traces of old adhesive from tip tank fin and buff area where adhesive was applied with sandpaper.
   2. Position new base on tip tank fin, align with fastener holes and mark around the base. Remove base from fin.
   3. Mix epoxy adhesive, EC-2216 (3M Company), by adding 100 parts by weight of EC-2216-B to 140 parts by weight of EC-2216-A. Blend to a uniform medium gray color. Apply adhesive and position static discharger base on tip tank fin.
   4. Secure the static discharger base to the tip tank fin using four CR2249-4 rivets.
   5. Repaint surfaces.

REMOVAL AND INSTALLATION OF NAV LIGHT FAIRING AND TAILCONE STINGER STATIC DISCHARGER. (See figure 7-XX.)

a. Remove static discharger base.
   1. Drill out the three rivets attaching discharge base and remove base from aircraft.

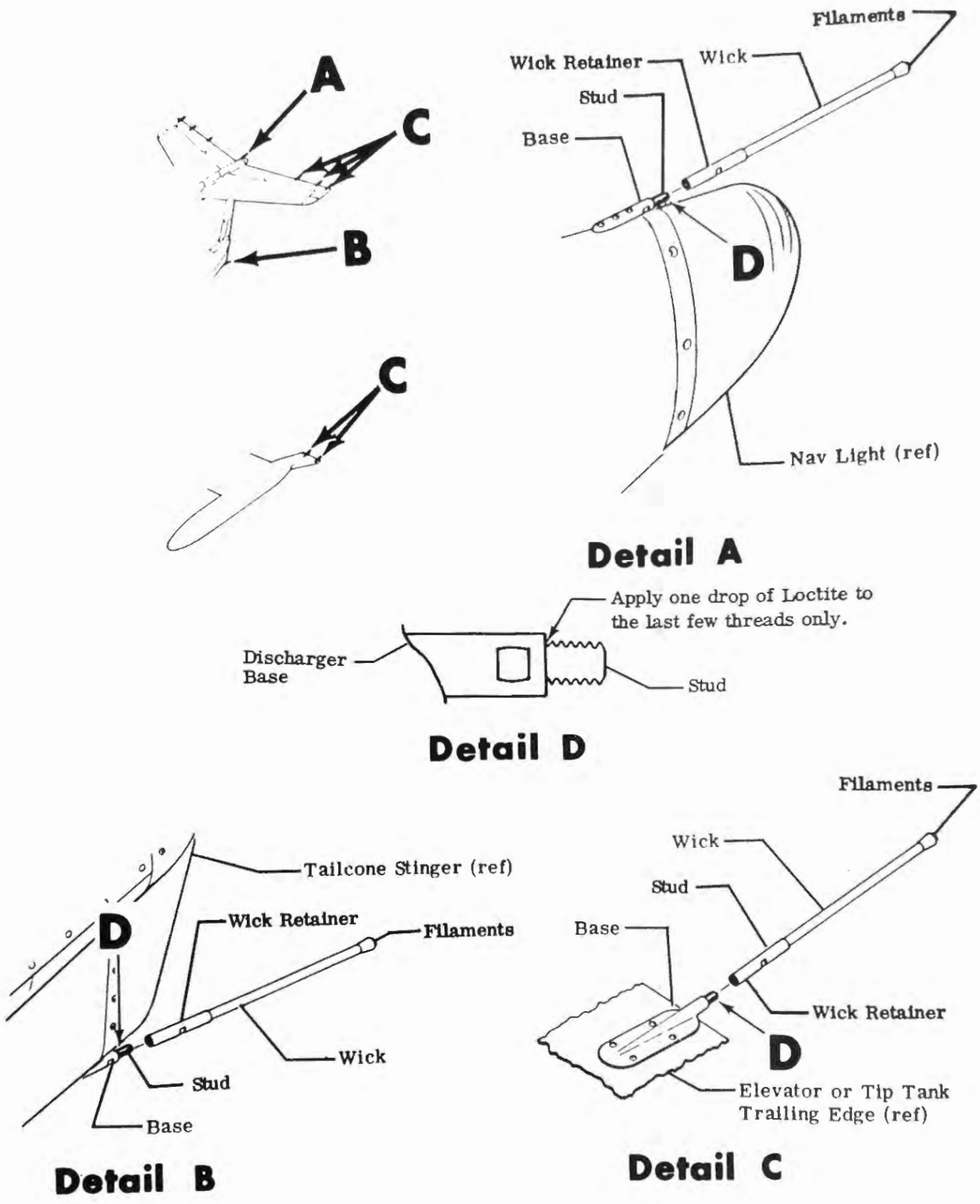

Figure 7-XX. Static Discharger Installation

b. Install static discharger base.
1. Position new discharger base on aircraft and align holes.
2. Secure discharger base using CR 2248-4-3, CR 2248-4-5 and CR 2248-4-6 rivets (1 each).
3. Apply a bead of ProSeal 890 sealant around the base of the discharger.
4. Repaint surface.

REMOVAL AND INSTALLATION OF ELEVATOR STATIC DISCHARGERS. (See figure 7-XX.)

a. Remove elevator static discharger base.
1. Drill out the four rivets attaching the discharger base to the elevator.
2. Using extreme care not to damage elevator skin, pry off discharger base.

b. Install elevator static discharger base.
1. Clean all traces of old adhesive from elevator skin and buff area where adhesive was applied with sandpaper.
2. Position new discharger base on elevator skin and align holes in base with holes in elevator skin. Mark a locating line around the discharger base on the elevator skin.

Note

When installing either the center or inboard static discharger, the two holes must be located and drilled to match the rivet holes in the elevator trailing edge. These holes may be located from the discharger base or from the actual holes in the elevator skin. Drill two #30 (.128) diameter holes in discharger base to match holes in elevator trailing edge.

3. Mix epoxy adhesive, EC-2216 (3M Company) by adding 100 parts weight of EC-2216-B to 140 parts by weight of EC-2216-A. Blend to a uniform gray color. Apply adhesive and position static discharger base on elevator.
4. Secure discharger base to elevator. Use four CR 2249AD4 rivets on the outboard discharger base. On the center and inboard dischargers use two CR 2249-AD4 rivets on the leading edge portion of the discharger and two MS20470B4 rivets on the trailing edge.
5. Fill the two unused holes in the center and inboard discharger bases with EC-2216 epoxy and sand flush.
6. Repaint the surface.

INSPECTION OF STATIC DISCHARGING WICKS.

a. Inspect to assure that plastic wick is secure in the metal wick retainer. Replace wick if loose.

b. Inspect the lightning diverter strip (gray strip along plastic wick) for cracks or peeling. Replace wick if strip is cracked or peeling.

c. Inspect the plastic portion of the wick for general condition.

d. Inspect wick filaments. Filaments should be visible in the wick retainer cone. Replace wick if the total number of filaments is less than approximately 10% of a new wick.

e. Inspect each discharger base to assure that there is no relative movement between base and aircraft skin. Base must be reinstalled if movement is detected.

FUNCTIONAL TEST OF STATIC DISCHARGE WICK INSTALLATION.

a. Using a digital ohmmeter with pin tip test probes, touch one probe to the nearest bare metal on the aircraft skin and touch the other probe to the wick retainer (metal portion of the wick). Resistance shall be less than 0.2 ohm for a newly installed base and 0.5 ohms maximum for an existing installation.

Note

DO not use a bonding meter or high current test set.

b. If resistance is greater than 0.5 ohm in step a. unscrew wick and clean threads inside of wick retainer and threads of stud. Reinstall wick and again check resistance.

c. Again connect probes to aircraft skin and wick retainer. Apply alternate side loads to the discharger base while observing ohmmeter. Resistance shall not vary while applying load.

d. If resistance varies while performing step c., the base must be removed and reinstalled.

e. Set up megohmmeter to test wick installation resistance at 500 volts as follows:

Note

The following procedure is for a General Radio Model 1863 megohmmeter. Equivalent substitutes may be used.

1. Set test voltage to 500.
2. Set dial to 10M scale.
3. Set switch to DISCHARGE.
4. Touch negative probe to nearest bare aircraft skin.
5. Touch positive probe to the discharge wick filaments.

Note

Use a large, smooth probe to make connection to the wick filaments. Use care not to push the wick filaments down into the wick.

6. Set Power Switch to ON.
7. Set Switch to CHARGE.

CAUTION

Do not touch aircraft skin and/or wick at the same time during measurement. Read manufacturer's instructions for megohmmeter operation before using.

f. After the red DANGER light has illuminated, switch to MEASURE. The resistance shall be 8 to 100 megohms. If resistance is greater than 50 megohms, set dial to 100M scale.

g. If resistance is not within limits, replace wick.

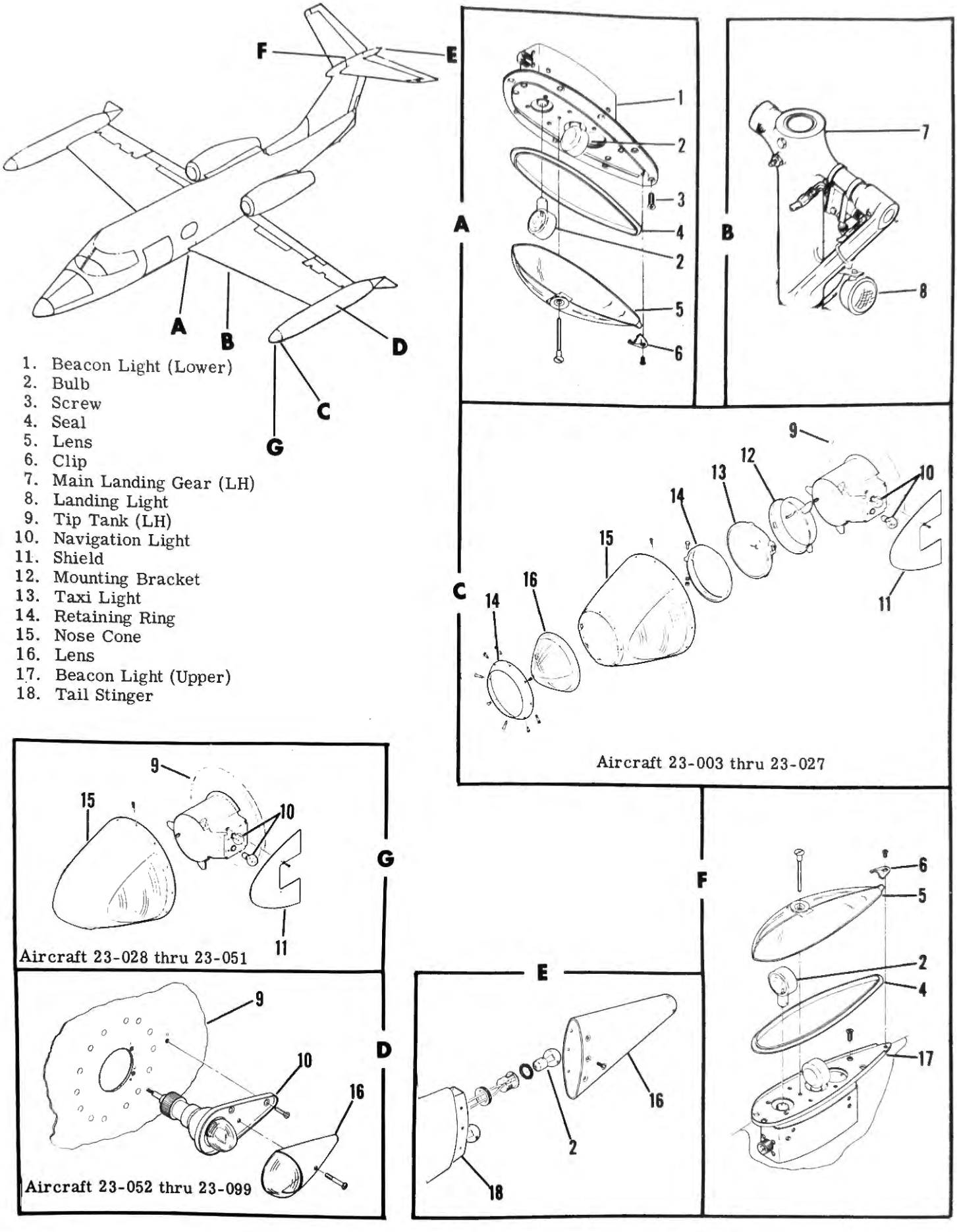

1. Beacon Light (Lower)
2. Bulb
3. Screw
4. Seal
5. Lens
6. Clip
7. Main Landing Gear (LH)
8. Landing Light
9. Tip Tank (LH)
10. Navigation Light
11. Shield
12. Mounting Bracket
13. Taxi Light
14. Retaining Ring
15. Nose Cone
16. Lens
17. Beacon Light (Upper)
18. Tail Stinger

Figure 7-13. Exterior Lighting Installation

SECTION VIII

INSPECTION REQUIREMENTS

AND

REPLACEMENT SCHEDULE

TABLE OF CONTENTS

Title	Page	Title	Page
Daily Inspection	8-1	6 Month Inspection	8-16
Preflight Inspection	8-2	600 Hour Inspection	8-17
Postflight Inspection	8-3	1200 Hour Inspection	8-20
Learjet Inspection Program	8-5	2400 Hour Inspection	8-24
Special Inspections	8-14	6000 Hour Inspection	8-25
Hard or Overweight Landing	8-14	Replacement and Overhaul Schedule	8-30
Severe Turbulence and/or Maneuvers	8-15	Replacement Items	8-30
Engine Change	8-15	Overhaul Items	8-32

INSPECTION REQUIREMENTS. This section is a guide to familiarize personnel with inspection items on Models 23, 24, 24B, 24D, 25 and 25B/C Gates Learjet Aircraft. All directions referred to are as viewed from the pilot's seat and the term "general condition" means "inspect for such items as finish, dents, cracks, and other distortions not normal to the aircraft.

DAILY (To be performed prior to the first flight of the day)

Exterior

1. Engine turbine and compressor blades for damage and condition.
2. Trim tabs for desired setting (neutral).
3. Fuel filler caps for security.
4. Windshield and windows for cleanliness.
5. Tires for wear and damage.
6. Hydraulic accumulator for proper charge.
7. Walkaround inspection.
8. Drain engine fuel collector tank.

Interior

1. Emergency air pressure for proper charge.
2. Oxygen system for proper pressure and leaks.
3. Interior and exterior lighting for operation.
4. Warning lights for operation and test.
5. Flight controls for freedom of movement.
6. Record fuel counter reading.
7. Record total fuel serviced.

After Last Flight of the Day

1. Check engine oil (both engines).
2. Inspect for hydraulic and fuel leaks.

PREFLIGHT (To be performed after major inspection, repair, or alteration)

Nose Section

1. Inspect the nose section for general condition and security, paying particular attention to the following items:
   a. Remove pitot tube covers and inspect pitot tubes and static ports for damage and obstruction.
   b. Check windshield exterior for cleanliness and general condition.
2. Check nose wheel area for cleanliness and general condition.
   a. Check nose gear strut for proper inflation and evidence of leakage.
   b. Check the tire and wheel for general condition and proper inflation of 65 (±5) psi for standard tire and 105 (±5) psi for chined tire.
   c. Oxygen indicator - Green face visible (Aircraft with cylinder installed in nose compartment).

Main Landing Gear

1. Inspect the tires and wheels for general condition and proper inflation of 105 (±5) psi for 8 ply tire and 115 (±5) psi for 10 ply tire.
2. Inspect the main landing gear for the following:
   a. Proper strut extension.
   b. Evidence of hydraulic fluid leakage.
   c. Wheel well doors for general condition.
   d. Landing light for general condition.

Wings

1. Inspect the wings for general condition, paying particular attention to the following:
   a. Open or loose access covers.
   b. Evidence of fuel or hydraulic leaks.
   c. The wing flaps, spoilers, ailerons, and trim tabs for general condition.
   d. Drain a small quantity of fuel from each fuel drain on the lower wing surface and fuselage. Check drained fuel for presence of water.
   e. Vortex generators for general condition and/or missing generators. (Refer to Section II.)
   f. Tip tank filler caps for security.
   g. Tip tank lights for broken or dirty lenses.
   h. Assure that vent openings are free from obstructions.

Cabin and Stairway

1. Inspect the cabin stairway and all attachment fittings for general condition.
   a. Check locking pins for burrs and contortions.

Engines and Nacelles

1. Inspect both engines in accordance with the Preflight/Postflight Inspection Requirements in the Engine Operating Instructions Manual (SEI-188).
2. Check installation of both engine nacelles.

Aft Fuselage

1. Inspect aft fuselage for general condition and security of access covers.
2. Remove dorsal inlet cover and check for obstruction.
3. Check anti-collision beacon for dirty, cracked, or broken lenses.
4. Check for presence of fire extinguisher thermal (red) and manual (yellow) discharge discs (LH side of fuselage). (Models 24, 24B, 24D, 25, & 25B/C)
5. Check oxygen discharge indicator (green disc) is visible. (Aircraft with oxygen cylinder installed in dorsal.)

Learjet Temporary Service Manual Revision

SERVICE MANUALS AFFECTED: Gates Learjet Models 23, 24, 24B, 24D, 25 and 25B/C Including United Kingdom 25B/C.

FILING INSTRUCTIONS: Insert adjacent to pages 8-2 and 8-3 and retain until further notice.

REASON: To clarify tire inflation pressures.

INSTRUCTIONS:

I. Under PREFLIGHT, Nose Section, revise item 2.b. as shown below.
II. Under PREFLIGHT, Main Landing Gear, revise item 1. as shown below.
III. Under POSTFLIGHT, Nose Section, revise item 2.d. as shown below.
IV. Under POSTFLIGHT, Main Landing Gear, revise item 1.c. as shown below.

PREFLIGHT

Nose Section

2.

b. Check tire and wheel for general condition and proper inflation. Standard nose tire inflation - 65 (±5) psi (62 to 73 psi loaded). Chined nose tire inflation - 105 (±5) psi (104 to 115 psi loaded).

Main Landing Gear

1. Inspect the main gear tires and wheels for general condition and proper inflation. 8-ply main tire inflation - 105 (±5) psi (104 to 115 psi loaded). 10-ply main tire inflation 115 (±5) psi (114 to 125 psi loaded).

POSTFLIGHT

Nose Section

2.

d. Check nose wheel tire for proper inflation. Standard nose tire inflation - 65 (±5) psi (62 to 73 psi loaded). Chined nose tire inflation - 105 (±5) psi (104 to 115 psi loaded).

Main Landing Gear

1.

c. Check main gear tires for proper inflation. 8-ply main tire inflation - 105 ±5) psi (104 to 115 psi loaded). 10-ply main tire inflation - 115 (±5) psi (114 to 125 psi loaded).

November 17, 1975

Empennage

1. Visually inspect empennage for general condition.
2. Check anti-collision beacon and navigation lights for obvious damage.

Cockpit

1. Oxygen pressure gage for system pressure.
2. Emergency air pressure gage for system pressure.
3. Circuit breakers for depressed position.
4. Cockpit and cabin interior for cleanliness.
5. Drain static defect correction module located under the copilot seat (if installed). Removable drain plugs are installed in the pitot and static sumps located on the outboard side of computer cover.

POSTFLIGHT (After final test flight following major inspection, repair, or alteration)

Nose Section

1. Inspect the nose section for general condition, paying particular attention to the following items:
   a. Check pitot tubes and static ports for damage and install pitot tube covers.
   b. Check windshield exterior for cleanliness and general condition.
   c. Check antennas for cleanliness and general condition.
   d. Check oxygen indicator - Green face visible (Aircraft with Oxygen Cylinder installed in nose).

2. Check nose wheel area for cleanliness and general condition.
   a. Check nose gear strut for obvious damage.
   b. Check steering actuator for general condition.
   c. Check nose gear strut for proper inflation.
   d. Check the nose wheel tire for proper inflation of 65 (±5) psi for standard tire and 105 (±5) psi for chined tire.
   e. Check nose gear doors and attachments for obvious damage.

Cabin Door and Stairway

1. Inspect the cabin stairway and all attachment fittings for cleanliness, security, and general condition.
   a. Check the locking pins for burrs, contortions, and cleanliness.

Main Landing Gear

1. Inspect the wheels and tires for the following:
   a. Obvious damage and overheating in the area adjacent to the brakes.
   b. Tires should be free from grease, oil, uneven tread, excessive wear, cuts, and blisters.
   c. Tires for proper inflation of 105 (±5) psi for 8 ply tire and 115 (±5) psi for 10 ply tire.
2. Inspect the brake assemblies and component parts for the following:
   a. Chafing, leakage, and security of accessible brake lines.
3. Inspect main gear for general condition and security as follows:
   a. Proper strut extension.
   b. Nicks, dents, and scratches.
   c. Evidence of hydraulic fluid leakage.
   d. Proper security of microswitches and hydraulic lines.
   e. Main gear wheel well doors for general condition.
   f. Landing light for general condition.

Wings

1. Inspect the wings for general condition, paying particular attention to the following:
   a. Open or loose access covers.
   b. Evidence of fuel or hydraulic leaks.
   c. The wing flaps, spoilers, and ailerons for security and general condition.
   d. Vortex generators for general condition and/or missing generators. (Refer to Section II.)
   e. Tip tank lights for broken or dirty lenses.
   f. Assure that vent openings are free from obstructions.

Engine and Nacelles

1. Inspect both engines and nacelles for general condition, paying particular attention to the following:
   a. Air intake
      (1) Interior, exterior, and leading edge for damage.
      (2) Oil film.
      (3) Perform the Preflight/Postflight Inspection Requirements in the Engine Operating Instructions Manual (SEI-188).
      (4) Install intake dust plugs.

Aft Fuselage

1. Inspect the aft fuselage for general condition and security of access covers.
   a. Inside the tailcone, check for the following:
      (1) Hydraulic reservoir for proper fluid level.
      (2) Hydraulic components for general condition and leakage.
      (3) Air conditioning ducts for general condition.
      (4) Batteries and electrical equipment for general condition.
   b. Check for presence of fire extinguisher thermal (red) and manual (yellow) discharge discs (LH side of fuselage). (Models 24, 24B, 24D, 25, and 25B/C)
   c. Assure that all vents and drain openings are clean and free from obstruction.
   d. Check oxygen indicator - Green face visible (Aircraft with oxygen cylinder installed in dorsal).

Empennage

1. Inspect empennage for general condition and security of access covers.
   a. Check anti-collision beacon and navigation lights for dirty, cracked, or broken lenses.

Cockpit

1. Oxygen pressure gage for system pressure.
2. Emergency air pressure gage for system pressure.
3. Cockpit and cabin interior for cleanliness.

Learjet Temporary Service Manual Revision

MANUAL AFFECTED: Gates Learjet Models 23, 24, 24B, 24D/E/F and 25 Service Manuals.

FILING INSTRUCTIONS: Insert as listed below and retain until further notice.

Model 23	- Adjacent to page 8-4.
Model 24	- Adjacent to page 8-4.
Model 24B	- Adjacent to page 8-4.
Model 24D/E/F	- Adjacent to page 8-4.
Model 25	- Adjacent to page 8-4.

REASON: To update postflight inspection.

INSTRUCTIONS: Revise step 1.a.(2) under Post Flight "Aft Fuselage" to read as follows:

POSTFLIGHT

Aft Fuselage

1. Same
   a. Same
      (1) Same
      (2) Hydraulic system components and fuel system components for general condition and leakage.

May 11, 1979

Learjet Temporary Service Manual Revision

MANUAL AFFECTED: Gates Learjet Models 23, 24, 24B, 24D/E/F and 25 Service Manuals.

NOTE: This Temporary Revision supersedes the Temporary Revision dated February 6, 1978 filed at this same location.

FILING INSTRUCTIONS: Insert adjacent to page 8-5 and retain until further notice.

REASON: 75-Hour Inspection interval deleted and text revision.

INSTRUCTIONS:

1. With one exception, the 75-Hour Inspection is hereby deleted.
2. Item E.19. (Remove, disassemble and clean fuel vent system check valves) must be retained and performed at each 75-Hour interval on Models 23, 24, 24B and 25.
3. On Model 24D/E/F the 75-Hour and 150-Hour intervals are to be deleted from item E.19. and item E.19. changed to read as follows:

   "Perform functional check of fuel vacuum relief valves."

4. Revise text on page 8-5 to read as follows:

INSPECTION PROGRAM

1. General
   - A. This recommended inspection program consists of individual inspections performed at 150, 300, 600, 1200, 2400, 3000 and 6000-hour as well as 6-month intervals.
   - B. The 150-hour inspection must be performed at least once during each six month calendar period. This applies to aircraft which fly less than 150 hours each six month period.
   - C. The 300-hour inspection must be performed at least once each 12-month calendar period. This applies to aircraft which fly less than 300 hours each 12 month period.
   - D. The factory recommends the following inspections to be performed on new Aircraft during the first 300 flight hours.
     - (1) At 150 hours perform the 300-hour inspection.
     - (2) At 300 hours perform the 300-hour inspection.
   - E. The time in calendar months and hours for each aircraft begins with the original Certification date (Airworthiness Certification Issue Date) recorded in the original Log Book for that aircraft.

F. Aircraft owners should adhere as closely as possible (not to exceed ±10%) to all recommended inspection intervals. The inspection intervals should be considered as beginning at the time the last inspection was performed.

G. For example, if the first 300-hour inspection was performed at 270 hours (300 minus 10%), then the second 300-hour inspection should be performed not later than 600 hours total aircraft time or 330 hours additional flight time since the first 300-hour inspection was performed. This will make the second 300-hour inspection performance concurrent with the recommended 600-hour requirements.

H. Unscheduled Maintenance Checks, Scheduled Servicing, Replacement Items, Overhaul Items and other inspections which correspond to the inspection intervals in this section, are to be accomplished concurrently.

5. Add the following note to item A.15. (Perform discharge and recharge cycle of emergency battery).

NOTE: The emergency battery is to be deep cycled every three months or 150 hours, whichever occurs first.

LEARJET INSPECTION PROGRAM

This recommended inspection program consists of individual inspections performed at 75, 150, 225, 300, 600, 1200, 2400, and 6000 hour intervals as well as 6-month intervals. These inspections may be performed more often at the owner's discretion. The program will assure a complete airworthiness inspection of the aircraft if accomplished at each 300 hour in service time interval. The 75 hour inspection must be performed at least once during each six month period and the 300 hour inspection at least once each 12 month period. After completion of the 300 hour inspection the program is repeated. The inspections are to be performed as follows:

Aircraft Hours (In Service Time)	Items To Be Performed
75 (±10%)	Those items checked in the 75 hour column.
150 (±10%)	Those items checked in the 150 hour column.
225 (±10%)	Those items checked in the 75 hour column.
300 (±10%)	Those items checked in the 300 hour column.

THE FACTORY RECOMMENDS THE FOLLOWING INSPECTIONS BE PERFORMED ON NEW AIRCRAFT DURING THE FIRST 300 FLIGHT HOURS.

1. At 75 hours perform the 75 hour inspection.
2. At 150 hours perform the 300 hour inspection.
3. At 225 hours perform the 75 hour inspection.
4. At 300 hours perform the 300 hour inspection.

The time in calendar months and hours for each aircraft begins with the Original Certification date (Airworthiness Certification Issue Date) recorded in the original Log Book for that aircraft. Model 23 aircraft which have been converted to Model 24 and aircraft that have had the wing removed either for Service Bulletin, Service Kit compliance, or major repair does not change this inspection time.

Aircraft owners should adhere as closely as possible to all recommended inspection intervals. The inspection intervals should be considered as beginning at the time the last inspection was performed.

For example, if the first 300-hour inspection was performed at 270 hours (300 minus 10%), then the second 300-hour inspection should be performed not later than 600 hours total aircraft time or 330 hours additional flight time since the first 300-hour inspection was performed. This will make the second 300-hour inspection performance concurrent with the recommended 600-hour requirements.

MAKE LEARJET	MODEL	SERIAL NO.	REGISTRATION NO
INTO WORK DATE		A/C DUE OUT DATE	
DESCRIPTION		AIRFRAME TOTAL TIME	

INTERVAL			APPROVAL		DESCRIPTION
75	150	300	MECH	INSP	
X	X	X			A. ELECTRICAL FUNCTIONAL CHECKS 1. Landing and taxi lights
X	X	X			2. Anti-collision beacons and navigation lights
X	X	X			3. Pitot and angle of attack vane heaters
X	X	X			4. Static port heaters (if installed)
X	X	X			5. Angle of attack vanes for shaker-pusher and indicator operation
X	X	X			6. Cabin and cockpit lights
X	X	X			7. Instrument, radio panel, and glareshield lights

INTERVAL			APPROVAL		DESCRIPTION
75	150	300	MECH	INSP	
					A. ELECTRICAL FUNCTIONAL CHECKS (CON'T)
X	X	X			8. Visual and aural warning systems
	X	X			9. Check continuity of nacelle inlet heaters (Aircraft with fiberglass nacelle inlets)
		X			10. Check resistance of nacelle anti-icing heating elements. (Aircraft with aluminum nacelle inlets) (Refer to Section V.)
X	X	X			11. Ice detection lights for operation
	X	X			12. Nose wheel steering
X	X	X			13. Flaps, spoilers, horizontal stabilizer, and trim tabs for proper operation and accurate indication
X	X	X			14. Operation of fuel and hydraulic supply shutoff valves and fuel crossflow valve
X	X	X			15. Perform discharge and recharge cycle of emergency battery or batteries (if installed). (Refer to Section I for Models 23, 24D, 25 and 25B/C) (Refer to Section VII for Models 24 and 24B)
X	X	X			16. Remove batteries from aircraft and perform a discharge and recharge cycle in accordance with Section I.
		X			17. Alcohol anti-ice pump for proper operation (if installed)
		X			18. Perform operational check of DC power distribution, battery switching and battery temperature indicating systems, if applicable. (Refer to Section VII.)
	X	X			19. Check operation of anti-skid system
X	X	X			20. Perform functional check of all circuit breakers, without power application, by pulling and resetting a minimum of three times. (Aircraft Model 23 and 24-100 thru 24-129). On aircraft 24-130 and Subsequent, 24D, 25 and 25B/C perform check at 300 hour intervals.
		X			21. Perform functional check of cabin safety valve pressure aneroid switch (if installed). (Refer to Section IV)
		X			B. WING FROM FILLET OUTBOARD, INCLUDING TIP TANKS (TYPICAL BOTH SIDES) 1. Wing, fillet, and tip tank exterior for condition, loose rivets, and fuel leaks
		X			2. Inspect the tip tank inner surface for loose or separated sealant. (Models 23, 24, 24B and 25)
		X			3. Vortex generators for general condition and/or missing generators. (Refer to Section II.)
	X	X	X		4. Aileron and aileron tabs and drive mechanism for security, operation and general condition

INTERVAL			APPROVAL		DESCRIPTION
75	150	300	MECH	INSP	
					B. WING FROM FILLET OUTBOARD, INCLUDING TIP TANKS (TYPICAL BOTH SIDES) (CON'T)
	X	X			5. All cables, pulleys, sectors, and pulley guards for proper operation and general condition. Particular attention should be given those areas of the cables that pass over pulleys, sectors or through fairleads. On Model 23 serials 23-003 thru 23-089 not modified by AMK73-5, inspect flap cables for fraying and wear with flaps in both up and down positions. Models 23 serials 23-090 thru 23-099 and 24, 24B, 24D, 25 and 25B/C perform check at 300 hour intervals.
		X			6. Spoiler and flap actuators for security of mounting, proper clearance, and general condition
		X			7. Inspect spoiler center hinge brackets (attached to wing spar 8) for cracks emanating for the bolt hole and/or bracket bend releifs. Inspect bracket bolt holes for elongation or distortion. Clean and dye penetrant inspect as required for definitive inspection results. If cracks are found or bolt hole is elongated more than .05 inch, incorporate AMK75-3.
		X			C. CENTER SECTION (FILLET TO FILLET)
		X			1. Wing-to-fuselage attach points for security (that portion visible through wheel wells)
		X			2. Keel beam for security and general condition (that portion visible through wheel wells)
	X	X			3. Plumbing for proper routing, condition, and leaks
X	X	X			4. Electrical wiring for proper routing, clearance, and general condition
X	X	X			5. Controls for proper operation, clearance and general condition
		X			6. Entire area for fuel or hydraulic leaks, line clearances, and condition
		X			7. Brake lines for proper routing and leaks; actuator attach points for security and strut hinge points for general condition
		X			8. Landing gear up and down electrical wiring for proper routing and general condition
		X			9. Remove and clean each anti-skid valve filter. Refer to Section III. (Applies to Model 25 and 25B/C only.)
		X			D. FLIGHT CONTROLS
X	X	X			1. Check for full travel and freedom of movement of all flight controls and proper engagement of stops
X	X	X			E. TAILCONE AND PYLON SECTIONS
					1. Exterior for condition, loose rivets, and cleanliness
					2. Fairings and fillets for security and condition

INTERVAL			APPROVAL		DESCRIPTION
75	150	300	MECH	INSP	
					F. TAILCONE AND PYLON SECTIONS (CON'T)
		X			3. Check pylon firewalls for cracks, firewall sealant, security of hydraulic and fuel connections, electrical and mechanical feed-throughs, and condition of bleed air flange gaskets.
	X	X			4. Electrical wiring for proper routing and electrical components for security and general condition
X	X	X			5. Clean and pressure check low pressure fuel filters. On aircraft equipped with paper filters, remove and replace filters
X	X	X			6. Fuel lines for leaks, general condition, and security; fuel drains for operation
		X			7. Replace pressure and return hydraulic filter elements
		X			8. Check hydraulic aspirator capillary line filter element for contamination: replace as necessary. Drain capillary line. (Applies to Models 23, 24, 24B, 25, 24D serials 24-230 thru 24-296 and 25B/C serials 25-070 thru 25-179.)
X	X	X			9. Hydraulic lines for leaks, proper routing, and security
	X	X			10. Bleed air ducting (including clamps and valves) for security of mounting, duct insulation, and contamination
		X			11. Air conditioning installation for proper belt tension, motor brush condition, security of mounting, and general condition
		X			12. If oil leaks are visible and/or refrigerant dumped, check compressor oil level (some leakage is allowable around shaft)
X	X	X			13. Check hydraulic accumulator precharge (850 psi)
		X			14. Ram air ducting and heat exchanger for security and general condition. On Models 23, 24, and 24B check damper box for security and general condition.
X	X	X			15. Throttle cables for condition, proper routing, and security of clamps
	X	X			16. Elevator and rudder cables, pulleys, pulley brackets, and guards for operation, condition, and security of mounting.
	X	X			17. Elevator and rudder servo cables and clamps for general condition of mounting
X	X	X			18. Fire extinguishing system bottle gages for normal operating pressure and plumbing for condition and security. (Models 24, 24B, 24D, 25 and 25B/C) (Refer to Section V.)
X	X	X			19. Remove, disassemble and clean the fuel vent system check valves (Models 23, 24, 24B and 25)(*On Models 24D and 25B/C perform operational check of fuel vacuum relief valves at 300 hour intervals) (Refer to Section V)
	X	X			20. Lubricate drag chute installation (if installed) in accordance with Section I.

INTERVAL			APPROVAL		DESCRIPTION
75	150	300	MECH	INSP	
	X*				21. Perform functional check of drag chute installation (if installed). (Functional check is described in Drag Chute Supplement.) NOTE: *Interval to be 150 hours or 90 calendar days whichever occurs first.
		X			22. Remove, inspect and clean as required, reservoir pressure regulator filter. (Applies to Model 24D 24-297 and Subsequent and Model 25B/C 25-181 and Subsequent) (Refer to Section III.)
					F. EMPENNAGE
X	X	X			1. Fillets, fairings, and skins for condition, cleanliness, and security of attachment
		X			2. Empennage-to-tailcone attach points for security of attachment
		X			3. Horizontal stabilizer, rudder, rudder tab and elevator hinges for security of attachment and general condition. When reinstalling bullet fairing, check to assure that elevator-bullet fairing clearance is .31 (±.12) inch
		X			4. Horizontal stabilizer rear spar caps for corrosion and general condition (elevator removal not required)
	X	X			5. ADF sense and HF antennas for corrosion and proper tension
		X			6. Elevator and rudder controls for proper operation, security of attachment, and general condition
		X			7. Stabilizer actuator lower attach fitting (including hinge pin) and their supporting structure for cracks, fastener condition, security, wear and general condition
		X			8. Vertical stabilizer for cracks, fastener condition and security at primary attachments
		X			9. Remove access panels and inspect upper and lower flanges of horizontal stabilizer ribs at right and left butt line 19.4 for cracks
		X			10. Oxygen bottle for security of mounting and plumbing for proper routing and security (when installed in dorsal)
		X			11. Check resistance of horizontal stabilizer anti-ice heating elements (if installed). (Refer to Section IV for Models 24D and 25B/C) (Refer to Section II for Models 24B and 25)
					G. COCKPIT (INTERIOR AND EXTERIOR)
		X			1. Equipment installations between frame 5 and instrument panel for security of mounting, proper routing, and clearances of wiring and plumbing
		X			2. Remove control wheel sector cover and turnbuckle coverplate from control column. Move control wheel to both extreme right and left while inspecting for frayed or damaged cables. (Refer to CONTROL CABLE DAMAGE LIMITATIONS, Section II.)
X	X	X			3. Control columns (including wheels) for condition, proper operation, and clearances
		X			4. Rudder pedals, pedal pushrods, and sectors for security, proper operation, and clearances

INTERVAL			APPROVAL		DESCRIPTION
75	150	300	MECH	INSP	
					G. COCKPIT (INTERIOR AND EXTERIOR) (CON'T)
		X			5. Center pedestal for condition, friction lock for operation, throttles and flap control for operation
		X			6. Control cables forward of frame 9, including pulleys, guards, and safeties, for proper operation
		X			7. Instrument panel for security, proper instrument markings, required placards, and general condition
X	X	X			8. Interior surface of windshield for cleanliness, security, and general condition
		X			9. Glareshield, headliner, and trim strips for security and general condition
X	X	X			10. Oxygen pressure gage for oxygen pressure (1550 to 1850 psi)
X	X	X			11. Emergency air pressure gage for air pressure (1800 to 3000 psi)
		X			12. Power brake valves for security, operation, and leaks
X	X	X			13. Exterior surface of windshield for evidence of crazing between windshield outer retainer and windshield, cleanliness, security, and general condition
		X			14. With batteries disconnected, check switch and circuit breaker panels for general condition
X	X	X			15. Crew seats for proper operation, security of mounting and general condition
X	X	X			16. Seat belts for proper operation, security of mounting and general condition
		X			H. CABIN
		X			1. Arm guides of upper cabin door clean and visually check for cracks
		X			2. Cabin door hooks for proper torque; door seals for adhesion, cuts and abrasion; latch rigging, lower door at hinge for cracks in frame; and door jamb extrusion and latch receptacles for general condition and security
		X			3. Remove pan assembly from lower cabin door and disassemble handle assembly. Inspect hole in pan, through which handle passes, for elongation. If necessary, rework handle installation per AMK74-2. (Applies only to aircraft 23-003 thru 23-099, 24-100 thru 24-209 and 25-003 thru 25-049 which have not incorporated AMK74-2.)
		X			4. Latch arm of cabin lower door clean and visually check for cracks
	X	X			5. Check oxygen masks for dropout, operation, and oxygen flow. Assure masks are stowed spirally to avoid kinking of lines. (Refer to Section IV.)

Learjet Temporary Service Manual Revision

SERVICE MANUALS AFFECTED: Gates Learjet Models 23, 24, 24B, 24D, 25 and 25B/C Including United Kingdom 25B/C.

FILING INSTRUCTIONS: Insert adjacent to page 8-11 and retain until further notice.

REASON: To clarify tire inflation pressures.

INSTRUCTIONS: Under I. LANDING GEAR, revise item 3 to read as follows:

I. LANDING GEAR

3. Tires for wear, cuts, abrasions, flat spots, and proper inflation. Main 8-ply tire - 105 (±5) psi (104 to 115 psi loaded). Main 10-ply tire - 115 (±5) psi (114 to 125 psi loaded). Standard nose tire - 65 (±5) psi (62 to 73 psi loaded). Chined nose tire - 105 (±5) psi (104 to 115 psi loaded).

November 17, 1975

INTERVAL			APPROVAL		DESCRIPTION
75	150	300	MECH	INSP	
X	X	X			H. CABIN (CON'T) 6. Cabin fire extinguisher (hand held) pressure gage for pressure (150 psi).
		X			7. Take up carpet and inspect flanges of frames 13 through 14 LH and frames 10 through 14 RH for general condition, deformation, and cracks in area above floorboard and inboard of seat rail support. (Aircraft 24-210 and Subsequent, 25-040 and 25-046 and Subsequent, 24D and 25B/C)
X	X	X			8. Cabin windows, cabin seats, baggage compartment, stowage cabinets, seat belts, rugs, headliner, side panels for general condition, security, cleanliness, and operation
		X			9. Clean or replace cabin pressurization filter elements. (Models 24D and 25B/C, refer to Section IV.) On aircraft modified by AAK73-8, remove and clean filters with MEK and air dry.
		X			10. Cabin altitude limiter for security of mounting; limiter inlet screen for foreign matter, clean if required; and inlet screen for damage, replace if necessary (Models 24D and 25B/C)
		X			11. Check operation of emergency exit window external handle. Remove and reinstall emergency exit window to assure freedom of operation
		X			12. Inspect Life Preservers in accordance with Section II.
	X	X			I. LANDING GEAR 1. Lubricate in accordance with Section I
	X	X			2. Clean and repack wheel bearings
X	X	X			3. Tires for wear, cuts, abrasions, flat spots, and proper inflation (Main - 105 (±5) psi for 8 ply tire - 115 (±5) psi for 10 ply tire; Nose - standard tire 65 (±5) psi - chined tire 105 (±5) psi). Check chine condition on chined tire.
X	X	X			4. Wheels for cracks and scratches. Splash skirt (when installed) for condition and security.
X	X	X			5. Brake assemblies for wear, cracks, hydraulic leaks, and proper release. Brake lines for proper routing and leaks
X	X	X			6. Landing gear shock struts for proper inflation. (Refer to Section I.)
		X			7. Landing gear actuator attachments and support structure for security and landing gear attach points for general condition.
		X			8. Main landing gear torque links for looseness
		X			9. Remove retainer ring lockscrew from main and nose landing gear struts. Assure that screw is not bent or otherwise damaged. Replace if necessary
		X			10. Perform retraction check, check automatic brake snubbing and retract cycle and landing lights for retract cutoff

INTERVAL			APPROVAL		DESCRIPTION
75	150	300	MECH	INSP	
		X			11. Landing gear squat switches for proper operation and condition
					J. ENGINE NACELLES (TYPICAL)
		X			1. Fire detector elements for chafing, security of clamps, and general condition
X	X	X			2. Nacelle structure, skin, and fasteners for cleanliness and general condition
		X			3. Hydraulic hose fire sleeves for cracking or discoloration. If evidence of cracking or discoloration exists, wrap the sleeves with 3M-361 fiberglass tape.
		X			4. Inlet duct seals and ducts for security and general condition
X	X	X			5. Rear nacelle for security and general condition
		X			6. Ice detector for security of installation (LH nacelle only) (Model 23 and 24 aircraft)
					K. FORWARD FUSELAGE
X	X	X			1. Nose compartment doors and fasteners for general condition, proper fit, and seals for bonding and general condition
X	X	X			2. Radome for general condition, finish, and security
		X			3. Marker beacon and glideslope antennas for general condition and security
		X			4. Pitot tubes, plumbing, and wiring for condition and security. Plumbing for low spots
		X			5. Static ports for distortion and plumbing for condition and security and low spots
		X			6. Autopilot altitude controller static and drain lines for condition and security. Check operation of drain valves
X	X	X			7. Angle of attack vanes for condition and security
		X			8. Windshield defog ducts and external outlets for security
X	X	X			9. Nose compartment for cleanliness. Electronic installations for security of mounting and proper wire routing
		X			10. Clean alcohol anti-ice filter element (if installed). Replace filter element if made of paper. Check tank for security and quantity of fluid
		X			11. Nose gear actuator boot and hydraulic plumbing at top of actuator for security

INTERVAL			APPROVAL		DESCRIPTION
75	150	300	MECH	INSP	
X	X	X			K. FORWARD FUSELAGE (CON'T) 12. Installation forward of frame 5 for general condition, security of mounting, and proper line routing
		X			13. Oxygen bottle for security of mounting and plumbing for proper routing and security (when oxygen cylinder is installed in nose.)
X	X	X			L. ENGINE INSPECTION 1. A thorough visual inspection of the engine is required. Refer to SEI-186 (Engine Maintenance Manual) for inspection requirements
		X			2. Visually inspect both inside and outside of engine exhaust nozzles for cracks. Cracks less than 3 inches may be welded by a certified welder using inert gas method. Refer to SB23/24-142 for further information. Nozzles with cracks larger than 3 inches must be replaced.
	X	X			3. Check length of all starter generator brushes. Brushes should be replaced when length, measured from edge of brush wire attach rivet, is 0.30 or less (Refer to Section VII.)
X	X	X			M. GENERAL 1. Check that all applicable FAA Airworthiness Directives are complied with and Log Book entries made
X	X	X			2. Review Manufacturer's Service Bulletins and Airplane Modification Kits for applicability
X	X	X			3. Check that all aircraft papers are current and in order before release of aircraft
X	X	X			4. Check that a Preflight Inspection has been performed

SPECIAL INSPECTIONS

A. The following recommended Special Inspection Requirements are considered necessary to insure safe operation of the Learjet aircraft. Seven categories of inspection are described. The first two cover abnormal operation of the aircraft and the remaining five are intended to preserve aircraft reliability. Visual inspection techniques are to be used at all times and are to be supplemented with other techniques as indicated in order to obtain definitive results.

B. The primary purpose of the long term inspections is to detect possible fatigue and corrosion damage. Fatigue damage is generally related to the number of flight hours and the type of flying conditions. Corrosion is related to a number of factors including flight hours, calendar time, and operational environment. The following inspection procedures that are directed toward corrosion detection have both a flight hour and a calendar time of compliance. The purpose is to insure that those aircraft having relatively low usage rates maintain their structural integrity in regions where a corrosion possibility exists. The necessary inspections are noted in tabular summaries. Useful comments on corrosion control measures are also included in the following paragraphs.

C. The pressurized cabin section of the aircraft is protected externally by use of clad aluminum skins, adequately primed and painted using a polyurethane paint system. In local areas, a polyester filler compound is used to achieve a superior aerodynamic surface. Internally, the surfaces are protected by a zinc chromate primer system and sprayed-on foam-in-place, polyurethane foam insulation. This semi-closed cell foam is trimmed back, generally to stringer height level and, below the floorboards, is seal coated with a polyester facing to minimize the possibility of fluid absorption. At various locations along the center of the aircraft, sump bays are provided with small drain holes for fluid overboard discharge.

D. The polyurethane foam is a superior means of corrosion control, if properly maintained. Its efficiency as a thermal barrier minimizes the formation of condensation since the cold cabin skin is insulated from the warm cabin air. For maximum effectiveness, it is imperative that a sound foam condition be maintained. If not maintained properly, the combination of moisture and foam, in contact with unprotected aluminum structure, may accelerate corrosion.

E. When performing certain inspections it will be necessary to remove certain local areas of foam. To facilitate removal of the foam, a wax parting agent is used on the structure in these areas.

F. Wing removal is required for the 6000 hour/10 year Inspection. After wing removal, all items which are not normally accessible for inspection should be inspected for general condition and security and replaced as necessary. Inspection of items on the removed keel beam, wing and fuselage should be performed. Items to be inspected include control cables, pulleys, brackets, bearings, feedthroughs, plumbing, electrical wiring, electrical connectors, foam insulation and sealing.

G. The procedures outlined in the following pages have been established to aid the Learjet owner/operator in preserving the structural integrity of the pressure cabin by combining adequate inspections with a foam condition maintenance program.

Hard or Overweight Landing ✱

A. After every hard landing or overweight landing, inspect the following areas:

1. Lower wing skin in landing gear rib area for skin buckles, fastener failures, security of landing gear rib and trunnion fittings.
2. Wing-to-body fittings and supporting structure for security, fastener condition, and permanent deformation.
3. Trailing edge region of wing for local deformation affecting normal usage of flaps and ailerons.
4. Tip tank-to-wing attachment for security, fastener condition, and evidence of excessive load such as failures and/or permanent deformation. It is not necessary to remove splice plates unless excessive fastener load or working is evident.
5. Keel beam and attachments for security, fastener condition, permanent deformation and torque of primary tension joint bolts.
6. Nose gear and main gear, actuator attachments, and support structure for security, fastener condition, and permanent deformation.

✱ Weights in excess of maximum landing weight.

Learjet Temporary Service Manual Revision

SERVICE MANUALS AFFECTED: Gates Learjet Models 23, 24, 24B, 24D, 25 and 25B/C Including United Kingdom 25B/C.

FILING INSTRUCTIONS: Insert adjacent to page 8-15 and retain until further notice.

REASON: To add REJECTED TAKEOFF to Special Inspections.

INSTRUCTIONS: Add REJECTED TAKEOFF to Special Inspections to read as follows:

REJECTED TAKEOFF.

A. If an aircraft should experience a rejected takeoff and above normal braking energies are expended, the main wheel tires should be removed and scrapped. A visual inspection may not show any apparent damage, however, incipient damage may have occurred which could cause premature failure.

November 17, 1975

Severe Turbulence and/or Maneuvers

A. After flight involving severe turbulence and/or maneuvers, conduct the following inspections:

1. Wing-to-body fittings and supporting structure for security, fastener condition, and permanent deformation.
2. Trailing edge region of wing for local deformations affecting normal usage of flap and aileron.
3. Tip tank-to-wing attachment for security, fastener condition, and permanent deformation.
4. Keel beam and attachments for security, fastener condition, permanent deformation, and torque of primary tension joint bolts.
5. Canted bulkheads and lower fin spar attachments in aft tailcone. Check for fastener security, permanent deformation of bulkheads and spar assemblies.
6. Horizontal stabilizer hinge fittings, actuator and fittings, and stabilizer center section structure for security, permanent deformation, or other evidence of overload.
7. Vertical stabilizer for permanent deformation, skin buckles, and security at primary attachments.

Engine Change

A. At every scheduled engine change, inspect the following components:

1. Engine yoke for corrosion and cracks at lightening holes, fastener holes, engine mount attachments, and welds.
2. Pylon beams for cracks at fastener holes, engine mount fittings, and beam-to-fuselage fittings.
3. Engine mounts for deformation and general condition (Refer to Section V).

6 MONTHS INSPECTION RECORD

MAKE LEARJET	MODEL	MODEL SERIAL NO	REGISTRATION NO
INTO WORK DATE		A/C DUE OUT DATE	
DESCRIPTION		AIRFRAME TOTAL TIME	

	MECH	DATE	INSP
A. At every 6-month interval, conduct the following inspections:			
1. Check for bacterial growth and corrosion in the wing tip fuel tanks. Defuel tip tanks and remove upper access covers. Using a light, inspect the tip tanks, especially at the bulkhead-skin interfaces. Bacterial growth is identified by a dark sludge on the skin surface. Tanks may also contain a blue-grey sludge on the skin surface which is not a bacterial growth. If the tip tank contains any sludge, remove the sludge from the bottom skin in the area of the aft water drain valve. Inspect this area for integrity of tank coating and for any corrosion. If corrosion is found in the tip tanks, further inspection into the wing tanks is required. Defuel wing tanks and remove the three access covers between wing stations 53.15 and 92.52. Using a light, check the entire area for bacterial growth and corrosion. If the area is clean and no bacterial growth or corrosion is evident, replace the access covers			
2. Remove engine fire extinguisher bottles (when installed) and perform a weight check of the bottles and a continuity check of the wiring			
3. Perform functional check of cabin dump switch (if installed). (Refer to Section IV.)			
4. Perform Emergency Lighting Power Supply Battery (if installed) discharge-recharge cycle. Refer to Section I.			

600 HOUR INSPECTION RECORD

MAKE LEARJET	MODEL	MODEL SERIAL NO	REGISTRATION NO
INTO WORK DATE		A/C DUE OUT DATE	
DESCRIPTION		AIRFRAME TOTAL TIME	

Note

The allowable tolerance for 600-Hour Inspection is ±10%.

	MECH	DATE	INSP
A. Flight Controls			
Note If the capstan slip clutch torque exceeds the specified values, disassemble the drum assembly, clean and relubricate the internal surface (both sides) of drum with a light application of Dow Corning No. 33 grease. Reassemble drum assembly and adjust slip clutch.			
1. Check aileron servo capstan slip clutch torque. (Refer to Section II) . .			
2. Check rudder servo capstan slip clutch torque. (Refer to Section II) . . .			
3. Check elevator servo capstan slip clutch torque. (Refer to Section II) . .			
4. Structure and controls in tunnel from pedestal and control column to frame 22 for operation, proper clearances and general condition.			
5. Check aileron control system cable tension aft of servo attachment. (Refer to Section II).			
6. Check aileron servo cable tension. (Refer to Section II).			
7. Check aileron control system cable tension forward of servo attachment. (Refer to Section II)			
8. Check flap control system cable tension. (Refer to Section II)			
9. Check rudder control system cable tension. (Refer to Section II)			
10. Check primary and secondary (if installed) yaw servo cable tension. (Refer to Section II)			
11. Check elevator control system cable tension. (Refer to Section II). . . .			
12. Check elevator servo cable tension. (Refer to Section II)			
13. Check aileron/rudder interconnect cable tension. (Refer to Section II)			

DESCRIPTION	600 HOUR (CONT)	MECH	DATE	INSP
A. Flight Controls (Con't)				
14. Stabilizer actuator-disassemble, clean, inspect for corrosion; relubricate and assemble. In order to accomplish this requirement, the performing facility must possess the required Repair Manuals and Special Test Equipment. (Refer to OVERHAUL ITEMS.)				
15. Forward spoiler actuator bolt on aircraft 24-178 thru 24-268 and 25-020 thru 25-114 (not incorporating AMK73-1) remove and replace bolt in accordance with SB 24/25-237 and REPLACEMENT SCHEDULE. On other aircraft, inspect actuator installation for security, cracks, and general condition.				
16. Upper flap surface for skin cracks and loose rivets. Cracks not to exceed a combined length of 3 inches at any one flap station. Cracks in excess require skin replacement. (Refer to Section II for allowable repairs).				
B. Fuselage				
1. Electrical wiring, hydraulic and pneumatic lines under floorboards for leakage, security and condition.				
2. Keel beam and forward and aft attach fittings for cracks and general condition.				
3. Remove headliner and close out panel in the area of the emergency escape hatch. Check latching mechanism for operation. (Refer to Section II)				
4. Inspect cabin air exhaust control valve and cabin safety valve diaphragms for contamination. If cleaning is required use ethyl or methyl alcohol only (Models 23, 24, 24B and 25).				
5. Remove cabin air exhaust control valve and clean poppet and seat with mild detergent (Model 24D and 25B/C).				
C. Electrical				
1. Perform functional check of Mach/Overspeed switch. (Refer to Section II).				
2. Pedestal interior wiring for proper wire routing, clearances, deterioration, etc.				
3. Inspect reverse current diode for dirt or other foreign matter (Models 24B, 24D, 25, and 25B/C) (Refer to Section VII).				
4. Perform functional check of battery temperature indicator sensor. (Model 24D and 25B/C.) (Refer to Section VII.).				
D. Wing				
1. Perform functional check of the wing fuel pressure switch. (Model 24D and 25B/C)(Refer to Section V.)				

Learjet Temporary Service Manual Revision

SERVICE MANUALS AFFECTED: Gates Learjet Models 23, 24, 24B, 24D/E/F and 25 Service Manuals.

FILING INSTRUCTIONS: Insert adjacent to page 8-18 and retain until further notice.

REASON: To add balance weight installation instructions.

INSTRUCTIONS: Under A. Flight Controls, add item 18 to read as follows:

A. Flight Controls

18. Inspect the aileron, rudder, and elevator balance weight installations and supporting structure. Inspect for evidence of vibration, fastener working, fatigue cracks and general security. Remove access covers as required for definitive inspection of internal mounting brackets or structure.

February 17, 1978

Learjet Temporary Service Manual Revision

SERVICE MANUALS AFFECTED: Gates Learjet Models 23, 24, 24B, 24D/E/F, 25 and 25B/C/D/F including United Kingdom 25B/C/D/F Service Manuals.

FILING INSTRUCTIONS: Insert adjacent to page 8-19 and retain until further notice.

REASON: To add Note to aid in locating emergency air filters.

INSTRUCTIONS: Under E. Landing Gear, item 1, add the following NOTE.

Note

The emergency gear union filter is located at the emergency gear valve where emergency air supply enters valve. The emergency brake union filter is located at the emergency brake valve where emergency air supply enters valve. On aircraft 24-319 and Subsequent and 25-195 and Subsequent, a third filter is installed in the emergency brake air line just below the pedestal inside the keel beam.

September 22, 1976

Learjet Temporary Service Manual Revision

MANUAL AFFECTED: Gates Learjet Models 23, 24, 24B, 24D/E/F and 25 Service Manuals.

FILING INSTRUCTIONS: Insert adjacent to page 8-19 and retain until further notice.

REASON: To add air conditioner compressor fan inspection.

INSTRUCTIONS: In the 600-Hour Inspection, add the following:

Air Conditioning

1. Perform a visual and dye penetrant inspection of the air conditioner compressor fan blades. Particular attention should be given to the fan blades in the area of the hub.

DESCRIPTION	600 HOUR (CONT)	MECH	DATE	INSP
E. Landing Gear				
1. Remove and inspect union filter in emergency gear and brake lines. Install new filter if necessary.				
2. Perform emergency air extension plumbing leakage check. (Refer to Section III.)				
F. Engine				
1. Visually inspect rubber portion of engine mounts for deterioration and evidence of sagging				

1200 HOUR INSPECTION RECORD

MAKE LEARJET	MODEL	MODEL SERIAL NO	REGISTRATION NO
INTO WORK DATE		A/C DUE OUT DATE	
DESCRIPTION		AIRFRAME TOTAL TIME	

	MECH	DATE	INSP

Note

The allowable tolerance for 1200-Hour Inspection is ±10%.

A. Wing

1. Remove wing-to-fuselage fairings and inspect wing skins, wing-to-fuselage attach fittings, and adjacent structure for corrosion, fastener security, cracks, permanent deformation, protective coating and general condition. . . . . .

2. Wheel well and center section of wing panel for general condition of skin, spars, attach fittings and supporting structure, landing gear rib and trunnion fittings. Check for permanent deformation, fatigue cracks, protective finish condition and general security. For aircraft with single flap actuator (mounted on upper wing surface), inspect the upper cap of wing spar No. 8 for indications of a spanwise fatigue crack adjacent to the flap actuator mounting bracket. . . . . .

3. Tip tank to wing attach fittings for security, fastener condition, cracks and permanent deformation. Removal of access straps is not required unless fasteners show evidence of overloading or joint working. . . . . .

4. Trailing edge region of wing for local deformation affecting normal usage of flap and aileron. . . . . .

B. Flight Controls

1. Inspect entire cable runs of rudder, ailerons, and elevator control systems for evidence of cable fraying and strand breakage, pulley bracket security, bellcrank and push-pull rod for condition and security. Replace cables in accordance with REPLACEMENT SCHEDULE. . . . . .

2. Hold the control wheel in a fixed position and apply up and down loads on the aileron trailing edge. Observe the aileron drive assembly area for wear in the shaft keyways, failure of bearings, and aileron yoke slippage. . . . . .

3. On aircraft 23-003 through 23-089 with single flap actuator (mounted on upper wing surface), remove actuator and attach bracket per Section II. Perform visual, 10X and dye penetrant inspections as indicated. Replace rod end and flap control system cables as required by REPLACEMENT SCHEDULE. Replace or refinish actuator as required per Section II. . . . . .

4. With spoilers extended, apply alternate up and down loads to spoiler trailing edge. Inspect spoiler actuator mechanism and hinge installation for security, cracks, and general condition . . . . . .

Learjet Temporary Service Manual Revision

SERVICE MANUALS AFFECTED: Gates Learjet Models 23, 24, 24B, 24D/E/F, 25, 25B/C/D/F and United Kingdom 25B/C/D/F.

FILING INSTRUCTIONS: Insert adjacent to page 8-20 and retain until further notice.

INSTRUCTIONS: In the 1200-Hour Inspection, under B. Flight Controls, add item 5. to read as follows:

B. Flight Controls

5. Replace flap nose roller bushing as required by REPLACEMENT SCHEDULE. Replace flap nose roller if worn to a diameter less than 0.744 inch. Replace flap nose roller track if slot width exceeds 0.775 inch at any point.

September 22, 1976

DESCRIPTION	1200 HOUR (CONT)	MECH	DATE	INSP

C. Fuselage

1. Inspect longitudinal and circumferential skin splices for fastener condition, fatigue cracks and general splice condition. If external appearance indicates need for a more thorough inspection, use x-rays to resolve disposition. (Refer to Section II for X ray Inspection) . . . . . .

2. Inspect under wing keel beam and attachments for security, fastener condition, fatigue cracks, permanent deformation and torque (100 to 140 inch-pounds) of primary tension joint bolts. . . . . .

3. Nose wheel well for fastener security, panel fatigue cracks, and general condition. . . . . .

4. Nose gear support installation for security, fastener condition, fatigue cracks, or permanent deformation at trunnion fittings and actuator attachment support structure areas. . . . . .

5. Upper and lower door hinge installations for cracks, loose or missing fasteners, and general condition. Observe forward and aft edges of hinge installation while racking the doors with alternating loads. If hinge installation condition requires a more thorough inspection, use x-rays to obtain definitive inspection results. (Refer to Section II for X ray Inspection). . . . . .

6. Dye penetrant inspect lower cabin door latch arms for cracks. . . . . .

7. Dye penetrant inspect inboard flange at longerons for cracks at intersection of the floor beam at frame 17A shown below (Models 23, 24-100 thru 24-180, and 25-002 thru 25-024): . . . . . .

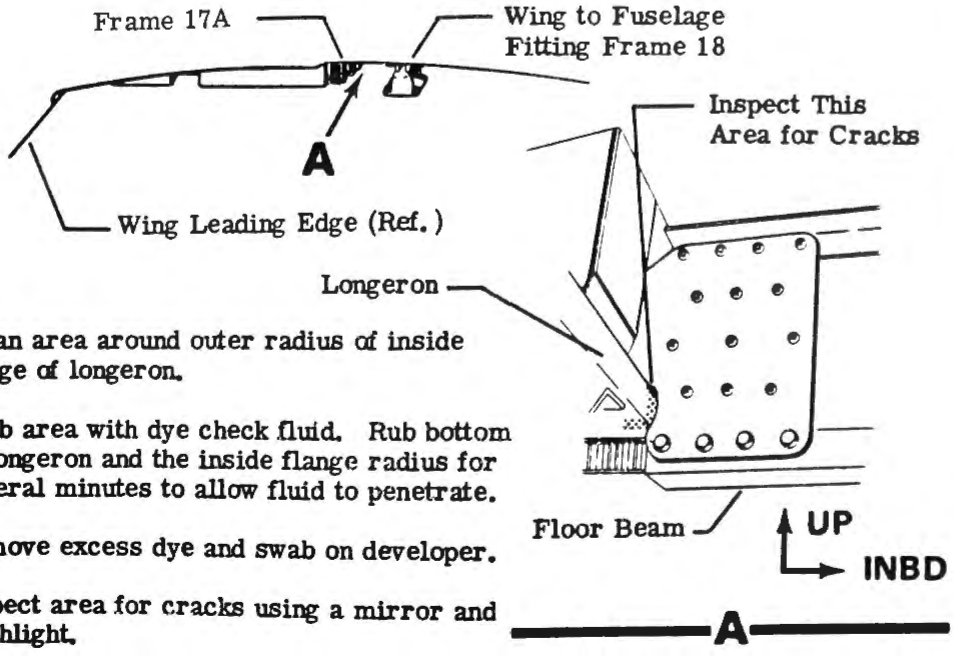

- **Clean area around outer radius of inside flange of longeron.**
- **Swab area with dye check fluid. Rub bottom of longeron and the inside flange radius for several minutes to allow fluid to penetrate.**
- **Remove excess dye and swab on developer.**
- **Inspect area for cracks using a mirror and flashlight.**

DESCRIPTION	1200 HOUR (CONT)	MECH	DATE	INSP
C.	Fuselage (Con't)			
	8. Lower longeron in region of wing for fatigue cracks, permanent deformation and general condition.			
	9. Lower flanges of baggage floor beams for fastener condition, fatigue cracks, and permanent deformation.			
	10. Bulkheads, frames and stiffeners in the tailcone for fastener security, cracks, and general condition.			
	11. Canted bulkheads and lower fin spar attachments in aft tailcone. Check for fastener security and permanent deformation at bulkheads and spar assemblies.			
	12. Engine yokes for cracks at lightning holes, fasteners, engine mount attachments, and welds.			
	13. Pylon beams for cracks, fastener condition, attachment to fuselage frames, and general condition of fittings.			
	14. Framing members of entry door for cracks, loose or missing fasteners and general condition.			
D.	Empennage			
	1. Horizontal stabilizer skin for cracks originating from rivet locations at B.L. 4.5 splice joint and condition of fasteners, stiffeners, ribs, and spars in the center section region.			
	2. With alternating up and down loads being applied to the stabilizer tip, observe actuator, hinge pin and hinge pin fitting areas for evidence of wear, looseness, free play, and general security.			
	3. With rudder pedals restrained, apply alternating left and right loads to the rudder trailing edge. Observe rudder hinge fitting areas for looseness, free play and general security.			
	4. With control column fixed, apply alternate up and down loads to the elevator trailing edge. Inspect each elevator hinge location for looseness, free play and general security.			
	5. Vertical stabilizer for cracks, fastener condition and security at primary attachments.			
E.	Landing Gear			
	1. Remove main landing gear wheels, brakes and anti-skid transmitter. Clean axles and inspect for wear, roughness, and corrosion. (Refer to Section I, Lubrication Requirements, prior to reinstallation.)			

Learjet Temporary Service Manual Revision

SERVICE MANUALS AFFECTED: Gates Learjet Models 23, 24, 24B, 24D/E/F and 25

FILING INSTRUCTIONS: Insert adjacent to page 8-22 and retain until further notice.

REASON: To add additional horizontal stabilizer inspection requirement.

INSTRUCTIONS: In the 1200-Hour Inspection, add item 6. under D. Empennage to read as follows:

D. Empennage

6. Horizontal stabilizer gusset located between R & L B.L. 4.50 just forward of the hinge pin. Inspect gusset for cracks, corrosion, and general condition. This inspection effective on aircraft which do not have a doubler riveted to the gusset to form a double thickness.

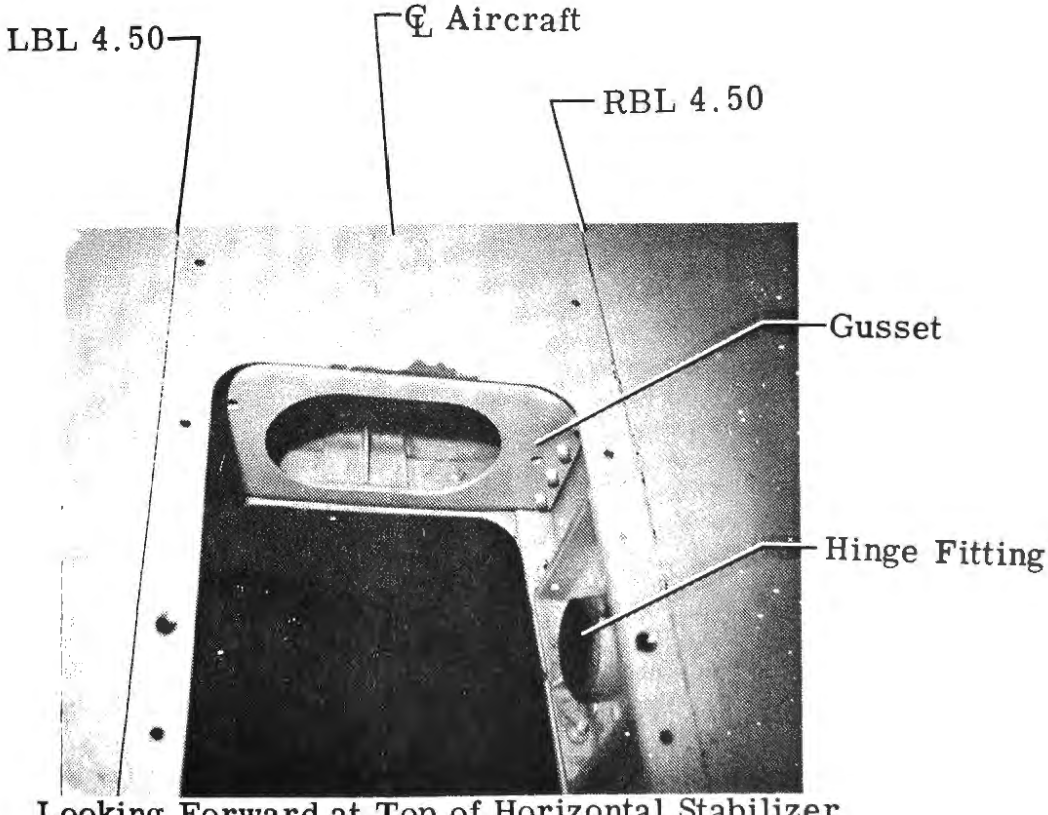

Looking Forward at Top of Horizontal Stabilizer

Learjet Temporary Service Manual Revision

SERVICE MANUAL AFFECTED: Gates Learjet Models 23 and 24

FILING INSTRUCTIONS: Insert adjacent to page 8-22 and retain until further notice.

REASON: To add inspection requirements for cabin door latch mechanism.

INSTRUCTIONS: In the 1200-Hour Inspection, add items 15 and 16 under C. Fuselage to read as follows:

C. Fuselage

15. Lower cabin door mechanism check. Open upper and lower cabin doors. Move lower door handle toward the open and closed positions while restraining the door pin movement. Check for security and free play in mechanism. Excessive free play may be due to mechanism failure, excessive wear or deformation . . . . . .

16. Upper cabin door handle and rod control assembly free play check. Open upper and lower cabin doors. Remove interior door upholstery to gain access to rod control assembly. Restrain the door pins and apply 75 pound force on upper door handle toward the closed and then to the open position. Observe inner door handle free play relative to rod control assembly. Excessive free play may be due to a worn rod control assembly bolt or worn shaft bolt holes. If this condition is found, disassemble and replace parts as required . . . . . .

July 15, 1977

DESCRIPTION	1200 HOUR (CONT)	MECH	DATE	INSP

E. Landing Gear (Con't)

2. Main gear and actuator for installation security, fastener condition, and permanent deformation. If end play exists between the main gear actuator rod and the threaded rod end, but does not exceed .004 inch, remove threaded rod end. Apply Loctite Retaining Compound No. 35 evenly to threads and reinstall rod end. With aircraft fully fueled and resting on landing gear the main gear struts shall be perpendicular to the ground line within 0° 15'. If end play exceeds .004 inch contact Learjet Factory or a Learjet Authorized Service Center. . . . . .

3. Clean and dye penetrant check the upper aft portion of the main landing gear struts as shown below. This inspection to be performed and repeated after the initial 6000 hour inspection. . . . . .

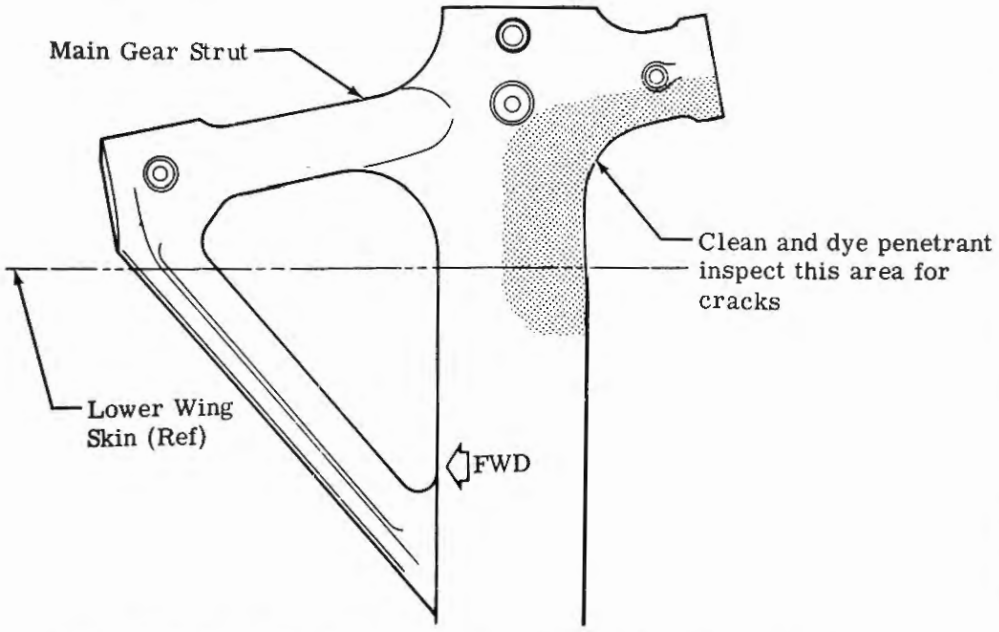

4. Remove nose landing gear wheel. Clean axle and inspect for wear, roughness, and corrosion. (Refer to Section I, Lubrication Requirements, prior to reinstallation). . . . . .

5. Nose gear and actuator for installation security, fatigue cracks, corrosion, and general condition. . . . . .

F. Electrical

1. Perform functional check of refrigeration system pressure switch (if installed). (Refer to Section IV) . . . . . .

2400 HOUR INSPECTION RECORD

MAKE LEARJET	MODEL	MODEL SERIAL NO	REGISTRATION NO
INTO WORK DATE		A/C DUE OUT DATE	
DESCRIPTION		AIRFRAME TOTAL TIME	

	MECH	DATE	INSP
1. Disconnect plumbing from the fire extinguisher two-way check valve assembly. Inspect for freedom of movement of the two-way check valve, evidence of defects, wear, and corrosion. Replace valve cap O-ring. Should any evidence of defects exist, overhaul or replace valve assembly			
2. Remove and disassemble control column as required to inspect pulleys, bearings, electrical wiring for proper routing and chafing, and control column for general condition. Refer to REPLACEMENT SCHEDULE, Aileron Control System Cables.			

Learjet Temporary Service Manual Revision

SERVICE MANUALS AFFECTED: Gates Learjet Models 23 and 24.

FILING INSTRUCTIONS: Insert adjacent to page 8-24 and retain until further notice.

NOTE: This Temporary Revision supersedes the Temporary Revision filed adjacent to page 8-24, dated February 17, 1978 and adds C. Electrical and paragraph C.1.

REASON: To add wing inspection requirement.

INSTRUCTIONS: Revise the 3000-Hour inspection to add item B.1. to read as follows:

3000 HOUR INSPECTION RECORD

MAKE	MODEL	SERIAL NO	REGISTRATION NO
INTO WORK DATE		A/C DUE OUT DATE	
DESCRIPTION		AIRFRAME TOTAL TIME	

	MECH	DATE	INSP
A. Fuselage 1. Gain access to upper door handle mechanism. Remove and replace bolt common to control rod assembly and door handle shaft. Check mechanism for security and free play after installation of bolt.			
B. Wing 1. Remove the lower access covers from the wing and, using adequate lighting and a mirror, conduct a general visual inspection of the wing structure for evidence of fatigue cracks, loose or missing fasteners, bacterial growth, filliform corrosion and general corrosion. If external fuel stains are noted, a more comprehensive inspection should be accomplished locally.			
C. Electrical 1. Remove attaching parts securing circuit breaker panel to structure. Check for loose circuit breaker terminals, loose wire terminals, corroded terminal or bus bars and evidence of wire insulation damage. In addition, on Aircraft 23-003 thru 23-099 and 24-100 thru 24-129, perform the same inspection on the tailcone circuit breaker panel.			

6000 HOUR INSPECTION RECORD*

MAKE	MODEL	MODEL SERIAL NO	REGISTRATION NO
LEARJET			
INTO WORK DATE		A/C DUE OUT DATE	
DESCRIPTION		AIRFRAME TOTAL TIME	

* OR 10 YEARS (WHICHEVER OCCURS FIRST)

Note

The allowable tolerance for 6000-Hour Inspection is ±300 hours.
The allowable tolerance for 10-Year Inspection is ±6 months.

	MECH	DATE	INSP
A. Wing (Removed from Fuselage)			
1. Remove aileron, flap and spoiler assemblies from wing. Refer to inspection instructions for these components.			
2. Remove all lower surface access doors. (Refer to Section I.) Using adequate lighting and mirror, conduct a general visual inspection of the wing structure for evidence of fatigue cracks, loose or missing fasteners, bacterial growth, filliform corrosion, and general corrosion. A more comprehensive inspection should be accomplished locally if external fuel stains are noted in the wet section.			
3. Clean and dye penetrant inspect all eight (8) wing attachment fittings in the lug area. Visually inspect fittings and support structure for cracks, deformation, marks and scratches, and general security. Visual inspection includes 10X magnification.			
4. Clean and dye penetrant inspect the lower centerline splice plate for fatigue cracks.			
5. Conduct a general external and internal inspection of the wing center section paying particular attention to the lower skin at the fuel pump cutout locations. Inspect for evidence of fatigue cracks, corrosion, deformation, and fastener/joint condition.			
6. Conduct an x-ray inspection of the multiple layer (skin, doublers, splice plate, rib cap) joint at the centerline splice. Angle x-ray shots should be made to detect any evidence of chordwise fatigue cracks along the fastener rows at B.L. 0.0 rib on the upper and lower surface. (Refer to Section II for X ray Inspection)			
7. Visually inspect internal and external areas of wing structure adjacent to landing gear rib. If evidence of a hard landing exists, x-ray trunnion fittings and/or dye penetrant rib cap/wing skin/spar structure as required for definitive inspection results. (Refer to Section II for X ray Inspection)			
B. Flight Controls			
1. Remove flap tracks and actuator pushrod from flap assembly. Inspect for wear and general condition. Magnaflux tracks and pushrod assembly for cracks. Check bearings for looseness and roughness.			

DESCRIPTION	6000 HOUR (CONT)	MECH	DATE	INSP
B.	Flight Controls (Con't)			
2.	Inspect flap support assemblies for security, wear and general condition. Remove and replace cam followers. Visually inspect support fittings for fatigue cracks emanating from fastener holes. Replace flap sector mounting bolt which secures flap sector to wing structure.			
3.	Inspect all control surface bearings for roughness, wear and general condition.			
4.	Inspect the bearings of all control system bellcranks, sectors, the control column and the control wheels for wear, roughness, security, general condition and ease of operation.			
5.	Inspect rudder and aileron trim tabs for general condition and security. Note particularly any hinge looseness that may contribute to excessive tab "free play".			
6.	Remove stabilizer actuator, disassemble, and inspect for wear, corrosion and general condition. Magnaflux and dye check structural parts. Prior to installation, comply with relubrication and bolt replacement defined by the Replacement and Overhaul Schedule. In order to accomplish this requirement the performing facility must possess the required Repair Manuals and Special Test Equipment. (Refer to OVERHAUL SCHEDULE.)			
7.	Inspect all control surface hinge brackets for fatigue cracks, security, and general condition.			
8.	Remove access panels at balance weight locations on rudder, aileron, and elevator and inspect balance weight installation for security and general condition			
9.	Inspect rudder, aileron, elevator, flap and spoiler surfaces for general condition, evidence of permanent distortion and fatigue cracks. See Replacement Schedule for life limited parts. (Dye penetrant inspect as required.)			
10.	X-ray inspect elevator ribs for flange cracks. Dye penetrant bellcranks and accessible section of torque tubes. (Refer to Section II for X ray Inspection)			
C.	Fuselage			
1.	Remove outer windshield retainers. Inspect stretched acrylic for delamination, crazing, cracks, corrosion, and general condition. Remove internal foam as required for definitive inspection at the adjacent support structure. (Refer to Section II.)			

Learjet Temporary Service Manual Revision

SERVICE MANUALS AFFECTED: Gates Learjet Models 23, 24 and 24B Service Manuals.
FILING INSTRUCTIONS: Insert adjacent to page 8-26 and retain until further notice. This Temporary Revision supersedes the existing Temporary Revision dated Jul 31/78 filed adjacent to page 8-26.
REASON: To add additional X-Ray requirements.

INSTRUCTIONS:
1. Revise item C.1, page 8-26, of the 6000-Hour/10 Year Inspection to read as follows:
2. Revise item C.4, page 8-27, of the 6000-Hour/10 Year Inspection to read as follows:
3. Revise item C.12, page 8-28, of the 6000-Hour/10Year Inspection to read as follows:

C. Fuselage

1. Remove both the R & L windshield assemblies from the aircraft. (Refer to Section II.) Inspect stretched acrylic for delamination, chipping, crazing, cracks (particularly at fastener locations), heat damage, and general condition. Particular attention should be given the inner surface of the windshield opposite the retainer. Clean sealant and dirt from the trimmed edge of the windshield and, using good lighting, inspect for fracture lines/planes along the trimmed surface. View windshield from inner edge (opposite retainer) and inspect for delamination extending away from the trimmed edge and toward the fastener row. Conduct a visual inspection of the accessible structure for security, general condition and fatigue cracks. X-ray windshield support structure. Foam removal not required unless X-ray indicates possible cracks. (Refer to Section II.)

4. Upper and lower cabin door hinges and doorway framing members; visually inspect accessible structure for security, general condition, excessive wear or looseness, and fatigue cracks. X-ray upper and lower hinges, attaching structure, and door framing members. Foam removal and removal of secondary inner skin not required unless X-ray results indicate possible cracks or corrosion or if internal/external visual inspection indicates excessive wear or looseness. Dye penetrant inspect as required to confirm inspection findings; after inspection is complete, repair and reprime as required. Repair/replace foam as necessary and reinstall secondary inner skin. (Refer to Section II for X-ray inspection.)

12. Longitudinal and circumferential skin splices (Pressure Cabin) - Conduct a visual external inspection of the skin splices along the main "T" stringers. Select random locations for X-ray shots along these splices. A minimum of 20% of length coverage is required; 100% of length coverage is required if random shots indicate corrosion or fatigue cracks. Conduct a visual external inspection of the circumferential skin splices at frame 9, 13, 15, 19, and 22. X-ray these circumferential skin splices across the top of the aircraft from stringer 6 left to stringer 6 right. (Refer to Section II for X-ray inspection.)

DESCRIPTION	6000 HOUR (CONT)	MECH	DATE	INSP

C. Fuselage (Con't)

2. Forward and aft pressure bulkheads for cracks, local deformation and fastener condition. Remove internal foam at aft bulkhead for 12 to 15 inches above baggage floor on left and right sides. Replace foam and repair any foam damage that may be an air passage to "cold" structure. On forward pressure bulkhead, inspect the top cap at windshield intersection for security, fatigue cracks, and general condition. . . . . .

3. Baggage Floor/Overwing Area - Remove foam from aft side of Frame 15 (lower portion) and from lower surface of honeycomb floor between frame 15 and 19. Additionally, remove foam from the lateral floor beams between frames 19 and 22. Inspect entire area for corrosion, security and general condition. Inspect the segmented honeycomb floor support angles at the outboard edges for fatigue cracks, fastener security and general condition. Inspect lateral floor beams (caps and webs) for fatigue cracks at fastener holes. Dye penetrant caps and webs as required for conclusive results. Upon inspection completion and repair as required, clean and re-prime. Replace foam and seal coat as required. . . . . .

4. Upper and lower cabin door hinges and doorway framing members visually inspect accessible structure for security, general condition, excessive wear or looseness, and fatigue cracks. X-ray upper and lower hinges and attaching structure. Foam removal and removal of secondary inner skin not required unless x-ray results indicate possible cracks or corrosion or if internal/external visual inspection indicates excessive wear or looseness. Dye penetrant inspect as required to confirm inspection findings; after inspection is complete, repair and re-prime as required. Repair/replace foam as necessary and reinstall secondary inner skin. (Refer to Section II for X ray Inspection) . . . . . .

5. Below Floorboard Inspection - Remove foam from each lower centerline bay (between keel beams) that serves as a fluid sump. These bays occur just forward of Frame 15, at each lower centerline antenna installation and/or at each drain hole location. Inspect for corrosion, general condition, and fatigue cracks. After inspection, re-prime, replace foam and seal coat. For the remainder of the under floor region, repair all foam and seal coat cracks and punctures that may be an air passage to "cold" structure. . . . . .

6. General Foam Insulation Condition - Inspect all remaining internally foamed areas of the pressure cabin. If the foam appears to have been punctured to the skin, remove locally and inspect for corrosion and general conditions. Inspect entire external surface of pressure vessel for possible "leaky" rivets. Remove foam internally at these locations and inspect for corrosion. Replace removed foam and repair any foam damage in the remainder of the pressure cabin that may be an air passage to "cold" structure. . . . . .

DESCRIPTION	6000 HOUR (CONT)	MECH	DATE	INSP
C.	Fuselage (Con't)			
7.	Underwing Keel Beam - Inspect end fittings for security, general condition, and fatigue cracks. Also inspect attaching fittings (forward of frame 15 and aft of frame 22) for similar effects. Magnaflux or replace tension bolts attaching beam to adjacent structure.			
8.	Cabin Windows and Framing Members - Visually inspect accessible structure for security, general condition and fatigue cracks. X-ray windows and support structure. Foam removal not required unless x-ray indicates possible crack. (Refer to Section II for X ray Inspection).			
9.	Pylon-Inspect pylon structure for security, general condition, corrosion, and fatigue cracks. X ray trailing edge portion of pylon, which is filled with foam, to detect hidden fatigue cracks or corrosion. Skin removal not required unless rework indicated. (Refer to Section II for X ray Inspection)			
10.	Wing Attachment Fittings - Dye penetrant lug area of wing fittings. Visually inspect remainder of fittings and support structure using 10X magnification. Inspect for cracks, security, and general condition.			
11.	Engine Mount Yoke - Remove bolts, rod ends, and yoke and magnaflux for fatigue cracks.			
12.	Longitudinal Skin Splices (Pressure Cabin) - Conduct a visual external inspection of the skin splices along the main "T" stringers. Select random locations for x-ray shots along these splices. Twenty percent (20%) of length coverage is required for Models 23, 24, and 24B. All other models require a 10% length coverage. (Refer to Section II for X ray Inspection)			
D.	Empennage			
1.	With alternating up and down loads being applied to the stabilizer tip, observe actuator and hinge pin fitting areas for evidence of wear looseness, free play, and general security.			
2.	Remove the horizontal stabilizer from the upper fin pivot fittings by removing the stabilizer hinge pin. (Refer to Section II.) Inspect stabilizer actuator as called out under Flight Controls. Visually inspect hinge pin for wear and corrosion and magnaflux for cracks.			
3.	Visually inspect upper fin structure, particularly in pivot fitting and stabilizer actuator attachment area. Use 10X magnification as required to aid visual inspection. Dye penetrant inspect accessible areas of pivot fittings. Inspect fitting installation for fastener security, general condition, wear, and fatigue cracks in the fittings or adjacent local structure.			

Learjet Temporary Service Manual Revision

SERVICE MANUAL AFFECTED: Gates Learjet Models 23 and 24

FILING INSTRUCTIONS: Insert adjacent to page 8-28 and retain until further notice.

REASON: To add inspection requirement for cabin door latch mechanism.

INSTRUCTIONS: Add item 13 to 6000-Hour Inspection to read as follows:

C. Fuselage

13. Gain access to upper door handle mechanism. Disassemble mechanism and inspect bolt holes common to handle shaft and rod control assembly. If holes are excessively worn in shaft or rod control assembly, replace as necessary.

July 15, 1977

6000 HOUR (CONT)

DESCRIPTION	MECH	DATE	INSP
D. Empennage (Con't)			
4. Inspect horizontal stabilizer pivot fitting installation for general appearance, security, wear corrosion, and fatigue cracks. If more definitive inspection is required because of suspect condition, remove fittings and magnaflux or dye penetrant inspect.			
5. Conduct a thorough visual inspection of the stabilizer center section (12 inches on each side of the aircraft). Use 10X magnification, dye penetrant, x-ray or eddy current as required to obtain definitive inspection results. Particular areas of interest include upper and lower front and rear spar caps, upper and lower left and right B.L. 4.5 rib caps, upper actuator attachment support, upper and lower skin splices at B.L. 4.5 stringer and clip attachments, etc. Possible discrepancies include fatigue cracks, corrosion, loose fasteners, and evidence of wear or fretting. (Refer to Section II for X ray Inspection)			
6. Remove all vertical stabilizer access panels and visually inspect internal rib and spar structure for cracks and loose or missing rivets. Inspect the local structure around the Dorne-Margolin antenna installation for fatigue cracks and fastener security. X-ray as required. (Refer to Section II for X ray Inspection)			
E. Landing Gear			
1. Remove main and nose gear (including actuators) from aircraft. (Refer to Section III.)			
2. Deflate struts and stroke from fully extended to fully compressed positions. Note binding tendencies during stroking, particularly near the fully compressed position			
3. Completely disassemble main and nose landing gear. (Refer to Section III.) Conduct visual dye penetrant and magnaflux inspection of all components as appropriate. Determine extent of wear by making dimensional checks. (Refer to Section III.)			
4. Completely disassemble main and nose gear actuators. (Refer to Section III.) Conduct visual, dye penetrant, and magnaflux inspection of all components as appropriate. Determine extent of wear by making required dimensional checks.			
5. Clean and dye penetrant upper cylinder as shown in 1200 hour inspection. This is to be repeated at 1200 hour intervals after the initial inspection.			
6. Inspect inboard attachment of main gear actuator for security, looseness, overload indications, and fatigue cracks. The pillar attachments to spars 7 and 8 are to be specifically inspected for discrepant conditions. Pillar removal is to be accomplished to facilitate definitive inspection. Dye penetrant and magnaflux as required.			
F. Fuel			
1. Inspect fuel supply line check valve orifices for condition and cleanliness (Refer to Section V)			

REPLACEMENT AND OVERHAUL SCHEDULE

This schedule is a list of equipment which should be either overhauled or replaced by serviceable components at the intervals indicated. Items not listed are considered "On Condition" items with unlimited service life and will only be repaired or replaced as necessary. All intervals are in hours unless otherwise indicated.

REPLACEMENT ITEMS

*Items identified by an asterisk require replacement at the times indicated to comply with FAA approved report 23-S47, 24-S47 or 25-S47. Vendor recommendations and service history dictates replacement times for items not identified by an asterisk.

SYSTEM AND COMPONENT	INTERVAL
Propulsion	
*Engine Yoke Assembly (Includes engine mounting pad, support tube assembly and bolt)	20,000
Engine Mounts (Rubber portion only)	Engine Overhaul
Flight Controls	
*Horizontal Stabilizer Assembly (Includes hinge fittings and actuator bracket)	16,000
*NAS464P6 Horizontal Stabilizer Actuator Attach Bolts	6,000
*Horizontal Stabilizer Hinge Pin	16,000
*Vertical Stabilizer Hinge Assembly	16,000
*Elevator Installation (Includes hinge and hinge supports, torque tube, bellcranks, and dual push-pull tubes)	16,000
*Wing Flap Assembly (P/N 2325010-1 and -2) (Applies to Aircraft 23-003 thru 23-017)	4,260
*Wing Flap Sector Mounting Bolt which Secures Flap Sector to Wing Structure	6,000
*Inboard Flap Track Assembly (P/N 2325022-2) (Applies to 23-003 thru 23-026)	9,700
*Outboard Flap Track Support (P/N 2322512-3 and -4) (Machined part)	11,900
*Wing Flap Assembly (P/N 2325010-151, -152, -277 and -228)	19,300
*Outboard Flap Track Support (P/N 2322512-3, -4, -5 and -6 or -14, -15, -16 and -17)(Forged Part	19,300
*Inboard Flap Track Supports (P/N 2322511-15, -16, -17 and -18 or -28, -29, -30 and -31)	19,300
*Outboard Flap Track Assembly (P/N 2325022-1)	19,300
*Outboard Flap Track (P/N 2325022-3)(Applies only to Models 23, 24, 24B and 24D)	19,300

Learjet Temporary Service Manual Revision

MANUALS AFFECTED: Gates Learjet Models 23, 24, 24B and 25 Service Manuals

FILING INSTRUCTIONS: Insert adjacent to page 8-30 and retain until further notice. This Temporary Revision replaces Temporary Revision dated Sep 25/78

REASON: To add replacement items.

INSTRUCTIONS: Under Replacement Items, add Electrical replacement items to read as follows:

SYSTEM AND COMPONENT	INTERVAL
Electrical	
L and R MAIN DC POWER (40 amp) circuit breaker (Effective Aircraft 23-002 thru 23-099; 24-100 thru 24-189 and 25-002 thru 25-029)	6000
MAIN DC POWER BUS TIE (50 amp) circuit breaker	6000

January 5, 1979

REPLACEMENT ITEMS (CONT)

SYSTEM AND COMPONENT	INTERVAL
Flight Controls (Con't)	
*Inboard Flap Track Assembly (P/N 2325022-5)	19,300
*Nose Roller Track (P/N 2322512-7 or -13)	19,300
*Flap Cam Followers, Bearings and all attaching hardware	19,300
*Replace Flap Cables (Applies to Aircraft 23-003 thru 23-089 not modified per AMK73-5)	1,200
*Flap Actuator Rod End (P/N DREMHDS-6) (Applies only to aircraft 23-003 thru 23-089 not modified per AMK73-5)	2,400
Flap Nose Roller Bushing	1,200
*Aileron Surface, Hinges and Hinge Support (P/N 2324011-1, -2, -136, -137, and -181) (Applies only to Model 23)	20,000
*Aileron Surface, Hinges and Hinge Support (P/N 2324011-215, -216, -268, and -269) and (P/N 2424000-1, -2, -3, -5, and -6) (Applies only to Model 24, 24B)	20,000
*Aileron Surface, Hinges and Hinge Support (P/N 2324027-21 and -22) (Applies only to Model 25)	20,000
*Aileron Surface, Hinges and Hinge Support (Applies only to Model 24D and 25B/C)	20,000
*Aileron Drive Yoke Bolt (P/N NAS1304-34H or NAS1104-38D and AN320-4 Nut)	1,200
*Aileron Center Hinge Attaching Bolt (P/N AN4H12A or AN4H11A)	1,200
*Aileron Drive Assembly consisting of Woodruff Key (P/N AN280R40G), Aileron Yoke Assembly (P/N 2324511-1), Aileron Drive Clevis (P/N 2324512-3 or -5), Bearing Support (P/N 2324510-8), and Drive Pulley Assembly (P/N 2324513-7, -8, -11, and -12) (Applies only to Model 24, 24B, 24D, 25, and 25B/C)	20,000
Replace Spoiler Actuator Bolt, Nut and Cotter Pin (Applies only to Model 24 serials 24-178 thru 24-180 not modified per AMK73-1, Model 24B serials 24-181 thru 24-229 not modified per AMK73-1, Model 24D serials 24-218, 24-230 thru 24-268 not modified per AMK73-1, Model 25 serials 25-020 thru 25-064 not modified per AMK73-1, and Model 25B/C serials 25-061, 25-070 thru 25-114 not modified per AMK73-1)	500
*Aileron and Elevator Control System Cables	2,400
Rudder Control System Cables	2,400
*Rudder Surfaces, Hinges and Hinge Support	15,000

REPLACEMENT ITEMS (CONT)

SYSTEM AND COMPONENT	INTERVAL
Landing Gear	
Fuel	
Fuel Hoses in Engine Nacelle Area	Engine Overhaul
All other Fuel Hoses in Aircraft	6,000
Hydraulic	
Hydraulic Hoses in the Engine Nacelle Area (Includes hoses attached to the hydraulic pump and terminating at the firewall)	
Note Hydraulic hoses in the engine nacelle area may be Teflon, in which case these hoses are not life limited and should be replaced as condition dictates.	Engine Overhaul
Hydraulic Hoses (Excluding those listed under Landing Gear and those in the engine nacelle area)	6,000
*Nose Gear Strut (Does not apply to Model 23)	20,000
*Nose Gear Actuator (Does not apply to Model 23)	20,000
*Main Gear Strut (Does not apply to Model 23)	9,000
*Main Gear Actuator (Does not apply to Model 23)	9,000
Hydraulic Hose for Main Gear Actuator Retract Port (Aircraft which have incorporated swivel hose kit, AAK71-4 and Model 25B/C, are to replace hose at 1500 hour intervals)	600
Hydraulic Hoses for Nose Gear Actuator, Main Gear Actuator Extend Port, Main Gear Door Actuator, and Main and Nose Gear Uplatch Actuator	1,500
All Hydraulic Brake Hoses located on the strut and in the wheel well area.	2,400
Fire Extinguisher	
Cartridges (See Note 1)	3 yrs.

OVERHAUL ITEMS

SYSTEM AND COMPONENT	INTERVAL
Propulsion	
Engines (Includes fuel control unit, oil tank, governor, and oil heat exchanger)	Refer to General Electric Service Bulletin (CJ610)72-43

Learjet Temporary Service Manual Revision

MANUAL AFFECTED: Gates Learjet Models 23, 24, 24B, 24D/E/F and 25 Service Manuals.

FILING INSTRUCTIONS: Insert adjacent to page 8-32 and retain until further notice.

NOTE: This Temporary Revision supersedes the Temporary Revision dated October 30, 1978, filed at this same location.

REASON: To clarify replacement items which were added by Temporary Revision dated October 30, 1978.

INSTRUCTIONS: Under Replacement Items, add Air Conditioning and replacement items as follows:

SYSTEM AND COMPONENT	INTERVAL
Air Conditioning	
Air Conditioner Compressor Fan Blade P/N 6608059-1 or 6608059-2	ON CONDITION
Air Conditioner Compressor Fan Blade P/N 6608059-4 (with steel stamp "A" near hub)	* 1200
Air Conditioner Compressor Fan Blade P/N 6608059-5	* 2400

Learjet Temporary Service Manual Revision

SERVICE MANUAL AFFECTED: Gates Learjet Models 23 and 24

FILING INSTRUCTIONS: Insert adjacent to page 8-32 and retain until further notice.

REASON: To add replacement interval for cabin door mechanism bolt.

INSTRUCTIONS: Add Fuselage and replacement intervals to read as follows:

Fuselage

Upper Door Mechanism Handle Shaft Bolt (P/N 2311490-8)	3,000

July 15, 1977

Learjet Temporary Service Manual Revision

SERVICE MANUALS AFFECTED: Gates Learjet Models 23, 24, 24B, 24D/E/F, 25 and 25B/C/D/F including United Kingdom 25B/C/D/F.

FILING INSTRUCTIONS: Insert adjacent to page 8-33 and retain until further notice.

NOTE: This Temporary Revision supersedes the Temporary Revision adjacent to page 8-33, dated 18 October 1976.

INSTRUCTIONS: Under Flight Controls, revise Stabilizer Actuator and Servos to read as follows:

Stabilizer Actuator - in accordance with Repair Manual, disassemble, clean, inspect, repair or replace worn parts, relubricate, assemble and test. 600

Servos (pitch, roll and yaw - when equipped with DC Torquer type servos) - Refer to J.E.T. Instruction Manual No. TP201. 3000

Servos (pitch, roll and yaw - when equipped with clutch type servos)

1. Disassemble, clean, inspect, repair or replace worn parts, including clutch and motor brushes as required, relubricate, assemble and test. 600
2. Replace bearings 1800
3. Inspect, replace, or repair commutator as required. 1800

1 November 1976

Learjet Temporary Service Manual Revision

SERVICE MANUALS AFFECTED: Gates Learjet Models 23, 24, 24B, 24D/E/F, 25 and 25B/C/D/F including United Kingdom 25B/C/D/F Service Manuals.

FILING INSTRUCTIONS: Insert adjacent to page 8-33 and retain until further notice.

REASON: To revise emergency air bottle intervals.

INSTRUCTIONS: Under OVERHAUL ITEMS, revise Pneumatics and add Notes 3 and 4 as follows:

Pneumatics

Emergency Air Bottle (See Notes 3 and 4)	1 yr - Visual Inspect 3 yrs - Hydrostatic Test (Section I) 15 yrs - Scrap

NOTES:

3. Time count for Inspecting, Replacement or Testing of this item shall commence from the original test date of the item.

4. Visual inspection of the emergency air bottle shall include both interior and exterior visual inspection (Refer to Section I).

January 12, 1977

OVERHAUL ITEMS (CONT)

SYSTEM AND COMPONENT	INTERVAL
Oxygen	
Cylinder (See Note 2)	5 yrs. ICC Hydrostatic Test
Pneumatics	
Emergency Air Bottle (See Note 2)	3 yrs. ICC Hydrostatic Test; 12 yrs. Scrap
Fire Extinguisher	
Container (See Note 2)	5 yrs. ICC Hydrostatic Test
Flight Controls	
★Stabilizer Actuator - Disassemble, clean, inspect for corrosion, relubricate, and assemble.	600
★Servos (Includes pitch, roll and yaw)	
Note Some aircraft are equipped with DC Torquers in the pitch axis. To date no overhaul requirements have been established for the DC Torquers.	
1. Disassemble, clean, inspect for corrosion, relubricate, replace motor and clutch brushes as required and re-assemble	600
2. Replace bearings	1,800
3. Inspect, replace, or repair commutator as required.	1,800
Landing Gear	
★Nose Wheel Steering Actuator (Does not apply to LearAvia Servos)	
1. Disassemble, clean, inspect for corrosion, relubricate, assemble, and replace motor and clutch brushes as required.	600
2. Replace bearings.	1,800
3. Inspect, replace, or repair commutator as required.	1,800

★ In order to accomplish this requirement, the performing facility must possess the required Repair Manuals and Special Test Equipment.

NOTES:
1. Time count for Replacement, Overhaul or Testing of this item shall commence from the Airworthiness Certification Issue Date recorded in the original Log Book for that aircraft.
2. Time count for Replacement, Overhaul or Testing of this item shall commence from the manufacturing date stamped on the item.

SECTION IX
WIRING DIAGRAMS - ELECTRICAL SYSTEMS

GENERAL. This section contains wiring diagrams for the electrical equipment as installed in the aircraft. For operation, maintenance, and servicing instructions on individual systems and components, refer to the applicable section of the Lear Jet Service Manual and Illustrated Parts Breakdown.

WIRING DIAGRAM INDEX

Title	Page
Wiring Diagram - DC Power and Start	9-3
Wiring Diagram - Engine Instruments	9-7
Wiring Diagram - DC Power Distribution	9-11
Wiring Diagram - Pilots Subpanel and Warning Lights	9-13
Wiring Diagram - Switch and Warning Light Panel	9-14
Wiring Diagram - Fire Detection and Hydraulic Indication	9-19
Wiring Diagram - Fuel Control	9-21
Wiring Diagram - Gear Monitor, Speed Brake and Aural Warning	9-25
Wiring Diagram - Gear Monitor, Spoiler and Aural Warning	9-28
Wiring Diagram - Heating and Vent	9-31
Wiring Diagram - Lighting	9-35
Wiring Diagram - AC Power	9-43
Wiring Diagram - Wing Anti-Ice System	9-44A
Wiring Diagram - De-Ice and Detection	9-45
Wiring Diagram - Trim Systems, Turn and Bank, Ram Air Temperature and Electrical Quantity and VR Control	9-49
Wiring Diagram - Pressurization System (SK23-294)	9-54A
Wiring Diagram - Nose Steering and Pressurization System	9-55
Wiring Diagram - Anti-Skid System	9-59
Wiring Diagram - Fuel Gaging System	9-61

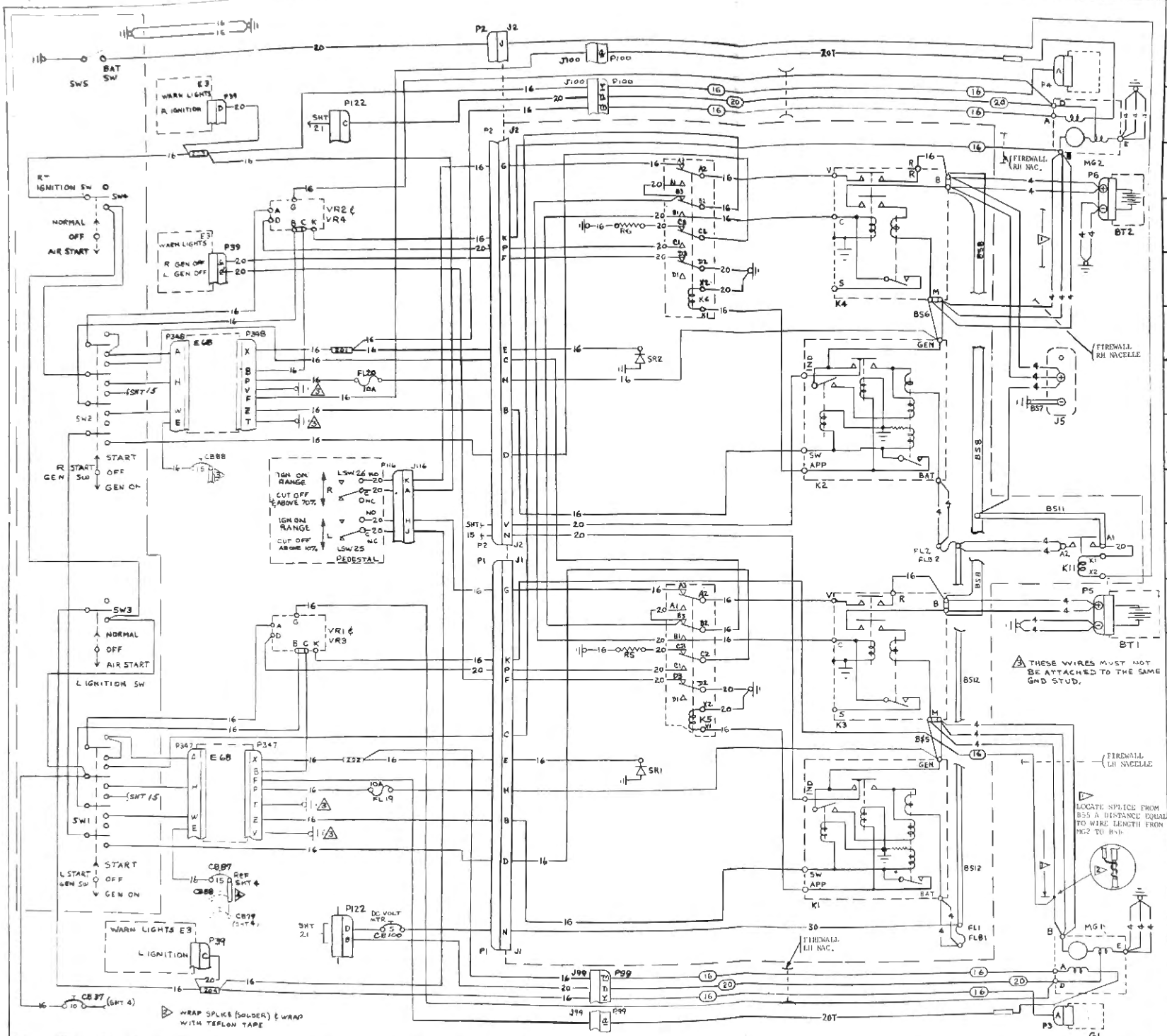

SYMBOL	PART NUMBER	NAME	VENDOR	INSTAL DWG
VR4	MIL-R-6809	VOLTAGE REGULATOR - R	—	2318020
VR3	MIL-R-6809	VOLTAGE REGULATOR - L	—	↕
VR2	AN3204-1 OR EQUIV	MTG BASE - VR - R	—	↕
VR1	AN3204-1 OR EQUIV	MTG BASE - VR - L	—	2318020
SW5	8801K13	SWITCH - BATTERY	C-H	2318350
SW4	8801K13	SWITCH - R IGNITION	C-H	↕
SW3	8801K13	SWITCH - L IGNITION	C-H	↕
SW2	7662K5	SWITCH - R START-GEN	C-H	↕
SW1	7662K5	SWITCH - L START-GEN	C-H	2318350
SR2	MR 326R	DIODE	MOT	2318010
SR1	MR 326R	DIODE	MOT	↕
R6	F114	RESISTOR - 125 OHM, 10 WATT	OHM	↕
R5	F114	RESISTOR - 125 OHM, 10 WATT	OHM	2318010
E3	(REF SHT 5)			
P39	(REF SHT 8)			
P116	SEE SHT 8			
P4	PT06E-6-1S	PLUG	SCIN	PER W/D
P3	PT06E-6-1S	↕	SCIN	↕
P2	PT06SE-22-21PW	↕	SCIN	↕
P1	PT06SE-22-21P	PLUG	SCIN	PER W/D
P100	(REF SHT 3)			
P99	(REF SHT 3)			
P122	(REF SHT 21)			
P6	MS25182-2	PLUG - BATTERY	—	PER W/D
P5	MS25182-2	PLUG - BATTERY	—	PER W/D
MG2	30837-7	STARTER-GENERATOR	B-RED	2355110
MG1	30837-7	STARTER-GENERATOR	B-RED	2355110
LSW26	15MI-J85	SWITCH - R IGNITION LIMIT	MICRO	2315131
LSW25	15MI-J85	SWITCH - L IGNITION LIMIT	MICRO	2315131
K11	S400-1	RELAY - BAT	—	2318010
P347 & P348	$801-3TSNR	PLUG	—	↕
J347 & J348	$801-4PM	RECEPT	—	↕
K6	$402-1	RELAY - R PARALLELING	—	↕
K5	$402-1	RELAY - L PARALLELING	—	↕
K4	2380055-1	RELAY - R START	—	↕
K3	2380055-1	RELAY - L START	—	↕
K2	S409-1	RELAY - R REVERSE I	—	↕
K1	S405-1	RELAY - L REVERSE I	—	2318010
J116	(REF SHT 8)			
J100	(REF SHT 3)			
J99	(REF SHT 3)			
E68	2318384-2	OVERVOLTAGE CONTROL		2318376
E67	2318384-1	OVERVOLTAGE CONTROL		2318376
J5	AN2552-3A	RECPT - EXT PWR	—	2318040
J2	PT06SE-22-21SW	RECPT - R GEN CONTROL	SCIN	2318010
J1	PT06SE-22-21S	RECPT - L GEN CONTROL	SCIN	2318010
G2	3704015B8	IGNITION GEN - R	GE-LY	2355000
G1	3704015B8	IGNITION GEN - L	GE-LY	2355000
FLB2	FSH OR FSH-4	LIMITER BASE	BURNDY	2318010
FLB1	FSH OR FSH-4	LIMITER BASE	↕	↕
FL2	FLLH (215A)	CURRENT LIMITER	↕	↕
FL1	FLLH (215A)	CURRENT LIMITER	BURNDY	↕
CB88	(SHT 4)			2318010
CB87	(SHT 4)			↕
CB37	BCI-10	CKT BKR	BAILES	2318350
BT2	2380057-1	BATTERY	—	2318035
BT1	2380057-1	BATTERY	—	2318035
FL20	M28937-10	CURRENT LIMITER		
FL19	M28937-10	CURRENT LIMITER		
▷	2308101-9	BUS BAR		
BS12	2308100-12	TIE BUS - FL TO FL	—	2318010
BS11	↕ -11	TIE BUS - START BUS TO K11	—	↕
BS8	-8	STARTER BUS	—	↕
BS7	2308100-7	GND BUS - EXT PWR	—	↕
BS6	2308100-6	R START-GEN BUS	—	↕
BS5	2308100-5	L START-GEN BUS	—	2318010

LEAR-JET — P.O. BOX 1280 WICHITA, KANSAS

	NAME	DATE
DRAWN	OPHEIM	4-15-65
GROUP	OPHEIM	
CHECK		
STRESS		
PROJ SUPERVISOR		
SUPERVISED BY		

TITLE: WIRING DIAGRAM - DC POWER & START

2308000 | A | 2.05

AIRCRAFT 23-003 THRU 23-014

SYMBOL	PART NUMBER	NAME	VENDOR	INSTL DWG
P127, P128	[illegible]	CABLE CLAMP		
VR6	[illegible]	VOLTAGE REGULATOR-R		2318020
VR5	[illegible]	VOLTAGE REGULATOR-L		
VR2	[illegible]	MTG BASE R		
VR1	[illegible]	MTG BASE L		2318020
SW5	[illegible]	SWITCH-BATTERY	C-H	2318360
SW3	[illegible]	[illegible]	C-H	
SW2	[illegible]	SWITCH-R START-GEN	C-H	
SW1	[illegible]	SWITCH-L START-GEN	C-H	2318360
SR2	[illegible]	DIODE	MCT	2318010
SR1	[illegible]	DIODE	MCT	
R6	[illegible]	RESISTOR - 25OHM 2WATT	C-H	
R5	[illegible]	RESISTOR - 25OHM, 10WATT	C-H	2318010
P86	[illegible]	PLUG		
FL19	MS28937-10	CURRENT LIMITER	BUSSMAN	
FL20	MS28937-10	CURRENT LIMITER	BUSSMAN	
MG2	30B37-7	STARTER-GENERATOR		2355110
MG1	30B37-7	STARTER-GENERATOR		2355110
LSW26	ISMI-JS5	SWITCH-R IGNITION	MICRO	2315131
LSW25	ISMI-JS5	SWITCH-L IGNITION	MICRO	2315131
K11	S400-1	RELAY-BAT		2318010
J122	$800-17SNR	PLUG		
K6	S402-1	RELAY-R PARALLELING		2318010
K5	S402-1	RELAY-L PARALLELING		
K4	2380055H	RELAY-R START		
K3	2380055H	RELAY-L START		
K2	S403-1	RELAY-R REVERSE C		
K1	S403-1	RELAY-L REVERSE C		2313010
J112	(SHT 8)			
CB88	(SHT 4)			
CB87	(SHT 4)			
MT26	MS28034-1	R RESISTANCE FUSE		2355110
MT25	MS28034-1	L RESISTANCE FUSE		2355110
SW(2)	[illegible]	AC VOLTMETER SW	C-H	2381297
E68	[illegible]	OVERVOLTAGE CONTROL BOX		2316354
E67	[illegible]	OVERVOLTAGE CONTROL BOX		2316014
G2	[illegible]	[illegible] GEN - R	GE	2355000
G1	[illegible]	[illegible] GEN - L	GE	2355000
E36	S226-1	INSTRUMENT CLUSTER		2314091
FLB2	[illegible]	LIMITER BASE	BURNDY	2318010
FLB1	[illegible]	LIMITER BASE		
FL2	[illegible]	CURRENT LIMITER		
FL1	[illegible]	CURRENT LIMITER	[illegible]	2318010
BS12, BS6	2308100	BUS BARS		
P86	$805-97SNR	PLUG		W/D
CB38	[illegible]	CKT BKR - OIL TEMP	ETA	2318350
P347 & P348	[illegible]	PLUG		W/D
J347 & J348	[illegible]	RECPT		W/D

LEAR-JET P.O. BOX 1280 WICHITA, KANSAS

DRAWN: OPHEIM	TITLE: WIRING DIAGRAM - DC POWER & START	
GROUP: OPHEIM	DWG NO: 2308000	A
	SHEET 2.07	

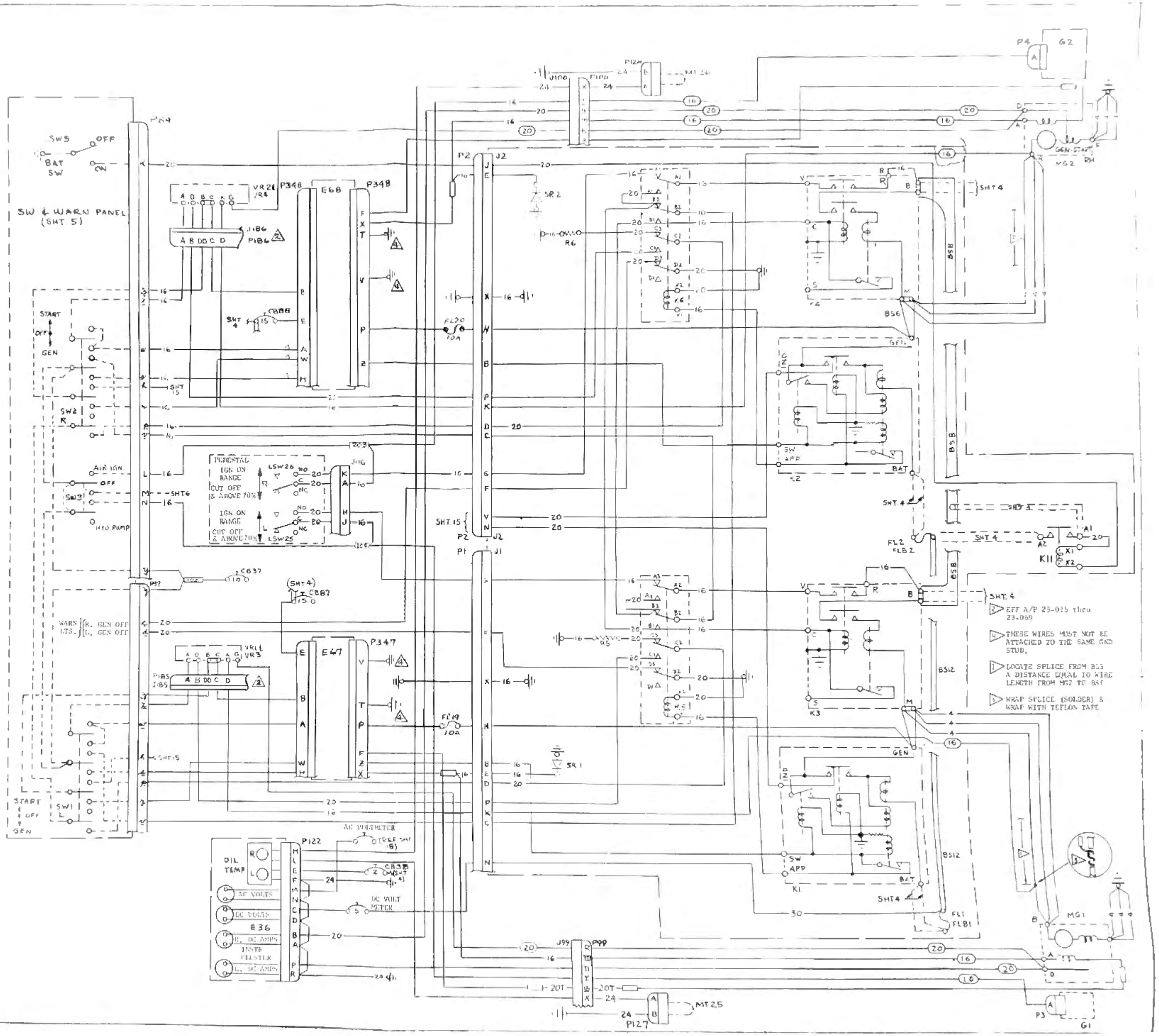

Learjet Temporary Service Manual Revision

SERVICE MANUAL AFFECTED: Gates Learjet Model 23

FILING INSTRUCTIONS: File adjacent to page 9-3 and retain until further notice.

REASON: To correct wiring diagram.

INSTRUCTIONS: Change effectivity of page 9-3 from 23-002 thru 23-014 to read 23-009 thru 23-014 and add new wiring diagram, effectivity 23-002 thru 23-008.

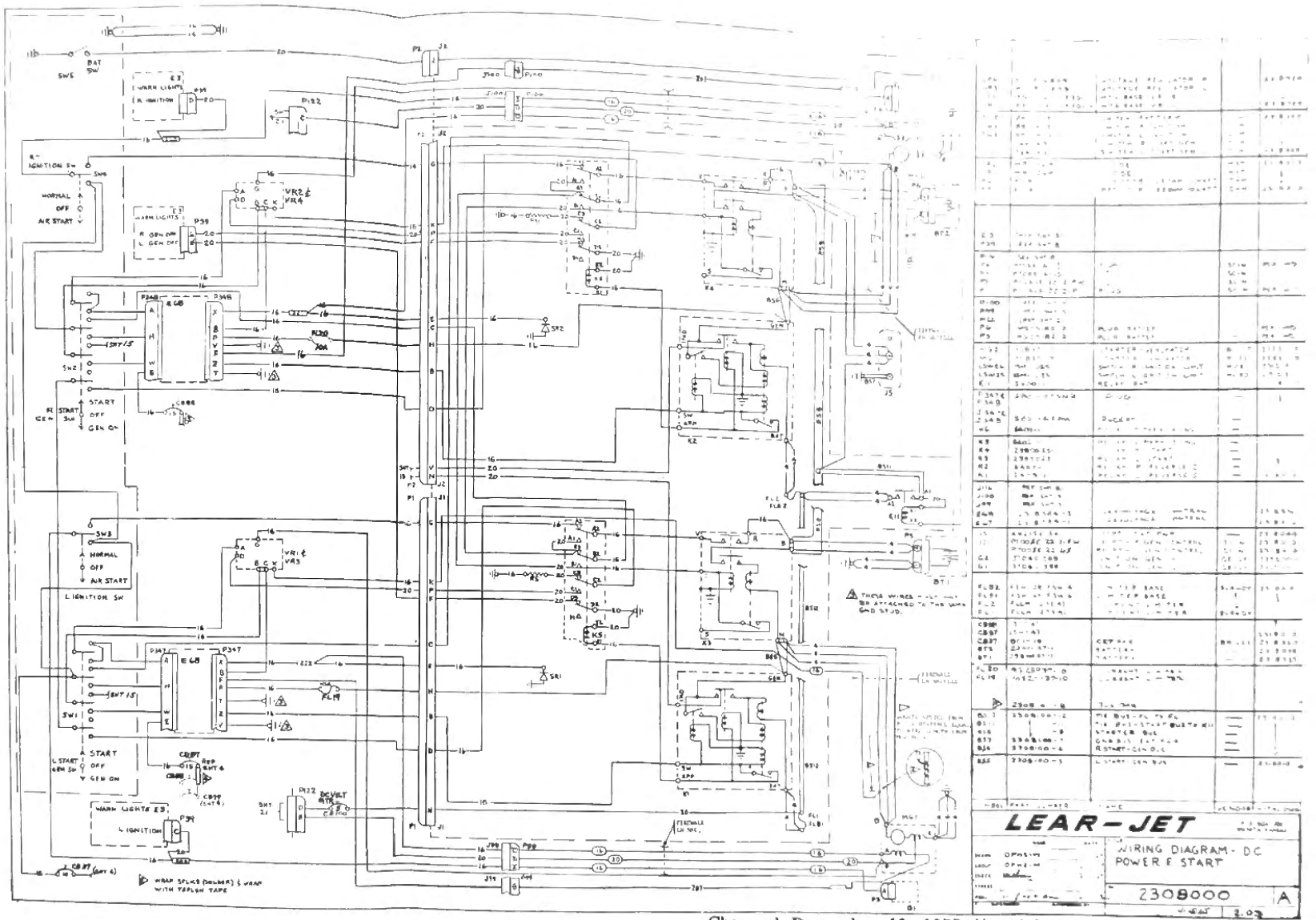

Changed December 10, 1975

Aircraft 23-003 thru 23-008.
See Page 9-3 for Aircraft 23-009 thru 23-014.

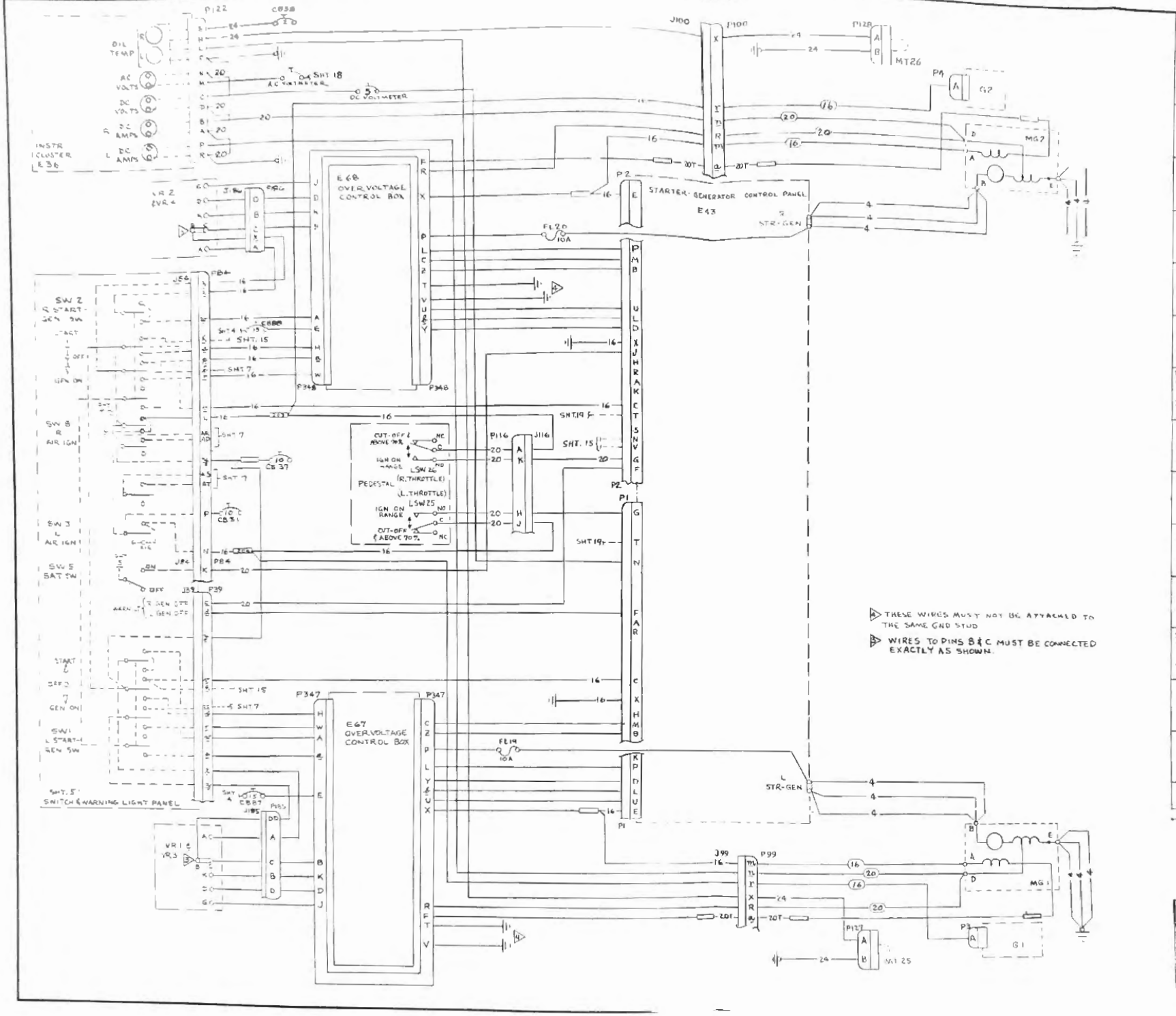

4 THESE WIRES MUST NOT BE ATTACHED TO THE SAME GND STUD

3 WIRES TO PINS B & C MUST BE CONNECTED EXACTLY AS SHOWN.

SYMBOL	PART NUMBER	NAME	VENDOR	USED ON DWG
J186 P186	(REF SHT 18)			
P347 & P348	$801-3TSNR	PLUG	—	W/D
J347 & J348	$801-4FPM	RECEPT	—	
P84	$805-9TSNR	PLUG	—	
P122	$800-1TSNR	PLUG	—	
FL20	M$28937-10	CURRENT LIMITER	—	
FL19	M$28937-10	CURRENT LIMITER	—	W/D
P116	(REF SHT 8)			
E43	A1043	GEN CONTROL PANEL	HTM	2318010
E68	2318384	OVERVOLTAGE CONTROL BOX	-	2318354
E67	2318384	OVERVOLTAGE CONTROL BOX	-	2318014
VR4	1589-1-E	VOLTAGE REGULATOR-L	B-RED	2318020
VR3	1589-1-E	VOLTAGE REGULATOR-L	B-RED	
VR2	2001-3	MTG BASE-VR-R	AVIA	
VR1	2001-3	MTG BASE-VR-L	AVIA	[illegible]
E36	5226-1	INSTRUMENT CLUSTER	-	231409[illegible]
SW8	8810K12	SWITCH-R AIR IGN	C-H	[illegible]370
SW5	8801K16	- BATTERY		
SW3	8810K12	L AIR IGN		
SW2	8859K42	- R START GEN		
SW1	8859K42	SWITCH - L START GEN	C-H	[illegible]
MT26	M$28034-1	R RESISTANCE BULB		[illegible]
MT25	M$28034-1	L RESISTANCE BULB	—	[illegible]
MG2	30837-7	STARTER-GEN	B-RED	[illegible]
MG1	30837-7	STARTER-GEN	B-RED	[illegible]
LSW26	15M1-J55	SWITCH-R IGN LIMIT	[illegible]	[illegible]
LSW25	15M1-J55	SWITCH L IGN LIMIT	[illegible]	[illegible]
G2	37D401588	IGNITION GEN-R	[illegible]	[illegible]
G1	37D401588	IGNITION GEN-L	-	[illegible]

LEAR JET

DRAWN	S. PES V.R.	7-14-66	WIRING DIAGRAM
CHK	[illegible]	7-25-66	DC POWER & START
[illegible]	[illegible]	7-25-66	

2508000 A

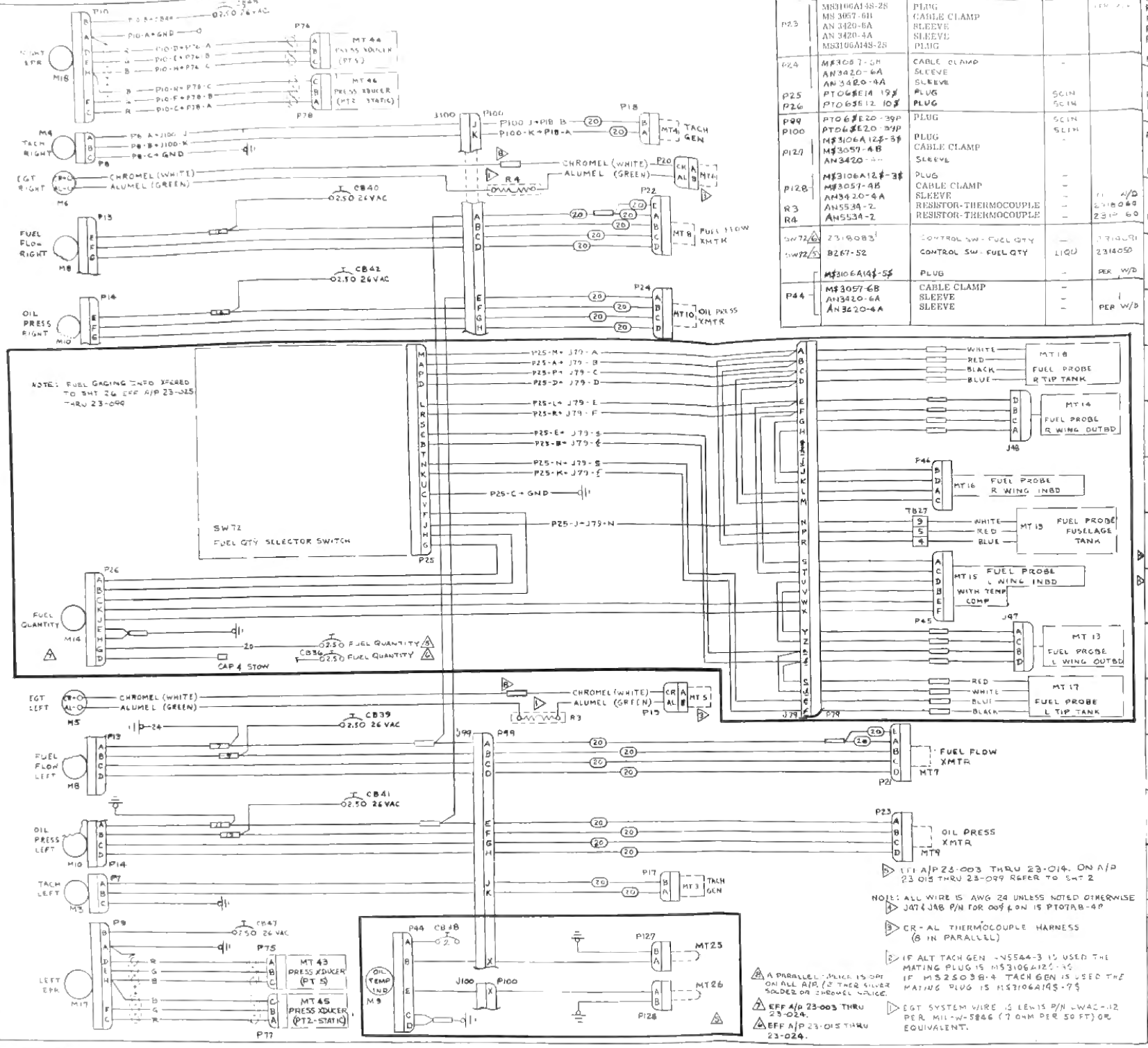

SYMBOL	PART NUMBER	NAME
P23	MS3106A14S-2S	PLUG
	MS 3057-6B	CABLE CLAMP
	AN 3420-6A	SLEEVE
	AN 3420-4A	SLEEVE
	MS3106A14S-2S	PLUG
P24	M83723/1-5M	CABLE CLAMP
	AN3420-6A	SLEEVE
	AN3420-4A	SLEEVE
P25	PTO6SE14-19S	PLUG
P26	PTO6SE12-10S	PLUG
P99	PTO6SE20-39P	PLUG
P100	PTO6SE20-39P	PLUG
	MS3106A12S-3S	PLUG
P127	MS3057-4B	CABLE CLAMP
	AN3420-4A	SLEEVE
P128	MS3106A12S-3S	PLUG
	MS3057-4B	CABLE CLAMP
	AN3420-4A	SLEEVE
R3	AN5534-2	RESISTOR-THERMOCOUPLE
R4	AN5534-2	RESISTOR-THERMOCOUPLE
SW72	23-18083	CONTROL SW - FUEL QTY
SW72	B267-52	CONTROL SW - FUEL QTY
	MS3106A14S-5S	PLUG
P44	MS3057-6B	CABLE CLAMP
	AN3420-6A	SLEEVE
	AN3420-4A	SLEEVE

SYMBOL	PART NUMBER	NAME	VENDOR	INSTAL DWG
P10	97-06C-18-8S	PLUG		
P22	97-06C-18-12S	PLUG		
P21	MS3106A16S-5S	PLUG		
P20	MS3106A14S-5S	PLUG		
P19	CS3106A-12S-5P	PLUG		
	CS3106A-12S-5P	PLUG CR-AL CONTACTS		
P18	MS3106A12S-3S	PLUG CR-AL CONTACTS		
	MS3057-4B	PLUG		
	AN3420-4A	CABLE CLAMP		
P17	AN3420-4A	SLEEVE		
	MS3106A12S-3S	PLUG		
	MS3057-4B	CABLE CLAMP		
	AN3420-4A	SLEEVE		
	MS3106A16L-1S	PLUG		
P14	MS3057-6B	CABLE CLAMP		
	AN3420-8A	SLEEVE		
	AN3420 6A	SLEEVE		
P13	MS3106A16S-1S	SLEEVE		
	MS3057-6B	PLUG		
		CABLE CLAMP		
	AN3420-8A	SLEEVE		
	AN3420-6A	SLEEVE		
P8	AN3420-6A	SLEEVE		
	MS3057-4B	CABLE CLAMP		
	MS3106A10SL-3S			
P7	MS3106A16SL-3S	PLUG		
	MS3057-6B	CABLE CLAMP		
	AN3420-6A	SLEEVE		
MT46	4-8061	PRESS XDUCER-R	LEAR	23140A5
MT45	4-8061	PRESS XDUCER-L	LEAR	23140A5
MT44	4-8061	PRESS XDUCER-R ENG	LEAR	23140A5
MT43	4-8061	PRESS XDUCER-L ENG	LEAR	23140A5
MT19	B820-2882	FUEL PROBE-SUS TANK	LIQU	23 6601
MT18	B820-2880	-R TIP TANK		2335005
MT17	B820-2880	-L TIP TANK		2335005
MT16	B820-3196	-R WING INBD		2316003
MT15	B820 3196-1	-L WING INBD		
MT16	B820-3197	-R WING OUTBD		
MT13	B820-3197	FUEL PROBE-L WING OUTBD	LIQU	2316003
MT10	MS28005-3	OIL PRESS XMTR-R		2355110
MT9	MS28005-3	" " -L		
MT8	9136-56-A1	FUEL FLOW XMTR-R	BPC	2355110
MT7	9136-56-A1	" " -L	BPC	
MT6	MT-1195	THERMOCOUPLE ASSY-R	GE-LY	CJ610
MT5	MT-1195	" " -L	GE-LY	CJ610
MT4	2CM9ABEG	TACH GEN-R	GE-LY	2355110
MT3	2CM9ABEG	" -L	GE-LY	2355110
MT26	MS28036-1	R RESISTANCE BULB		
MT25	MS28034-1	L RESISTANCE BULB		
J100	PTO6SE20-39S	RECP		
J99	PTO6SE20-39S	RECP		
J48	PTO2H-8-4P	RECP	SCIN	PER W/D
	10-101349-8	GASKET		
J47	PTO2H-8-4P	RECP		
	10-101349-8	GASKET	SCIN	
P29	(SEE SHT 8)			
P44	PTO6SE8-4S	PLUG	SCIN	
P45	PTO6SE10-6S			
P79	PTO6SE18-32P			
P78	PTO6SE8-4S			
P77	PTO6SE8-4S			
P76	PTO6SE8-4S			
P75	PTO6SE8-4S	PLUG		
J99	PTO6SE18-32S	RECP	SCIN	PER A/D
E9	(SEE SHT 5)			
M9	S-223-1	INDICATOR-OIL TEMP	LEAR	2316050
M18	S-5000	PRESS RATIO IND-R	LEAR	
M17	S-5000	PRESS RATIO IND-L		
M16	B-852-16	FUEL QUANTITY IND		
M10	5208-2	OIL PRESS IND-DUAL		
M8	S217-1	FUEL FLOW IND-DUAL		
M6	S-207-1	EGT IND-R		
M5	S-207-1	EGT IND-L		
M4	S-201-1	TACHOMETER IND-R		
M3	S-201-1	TACHOMETER IND-L		2316050
CB38	41-2-5/14-4N2(2A)	CKT BKR	ETA	2316350
CB40		CKT BKR	ETA	
CB41				
CB42				
CB43				
CB44				
CB45				
CB39		CKT BKR	ETA	2316350
CB36	41-2-5/14-4N2(2A)	CKT BKR	ETA	

NOTE: ALL WIRE IS AWG 24 UNLESS NOTED OTHERWISE

A J47 & J48 P/N FOR 005 & ON IS PTO7A8-4P

B CR-AL THERMOCOUPLE HARNESS (8 IN PARALLEL)

C IF ALT TACH GEN -N5544-3 IS USED THE MATING PLUG IS MS3106A12S-3S IF MS25038-4 TACH GEN IS USED THE MATING PLUG IS MS3106A14S-7S

D EGT SYSTEM WIRE IS LEWIS P/N LWAC-12 PER MIL-W-5846 (7 OHM PER 50 FT) OR EQUIVALENT.

E A PARALLEL SPLICE IS USE ON ALL A/P. (2 THER SILVER SOLDER OR CHROMEL SPLICE.

F EFF A/P 23-003 THRU 23-024.

G EFF A/P 23-015 THRU 23-024.

H EFF A/P 23-003 THRU 23-014. ON A/P 23-015 THRU 23-099 REFER TO SHT 2

LEAR-JET

P.O. BOX 1280 WICHITA, KANSAS

	NAME	DATE
DRAFT	OPHEIM	
GROUP	OPHEIM	
CHECK		
STRESS		
PROJ		
SUPERVISOR		

TITLE: WIRING DIAGRAM - ENGINE INSTRUMENTS

DRG NO 2308000 A

SCALE — SHEET 3.02 OF 25

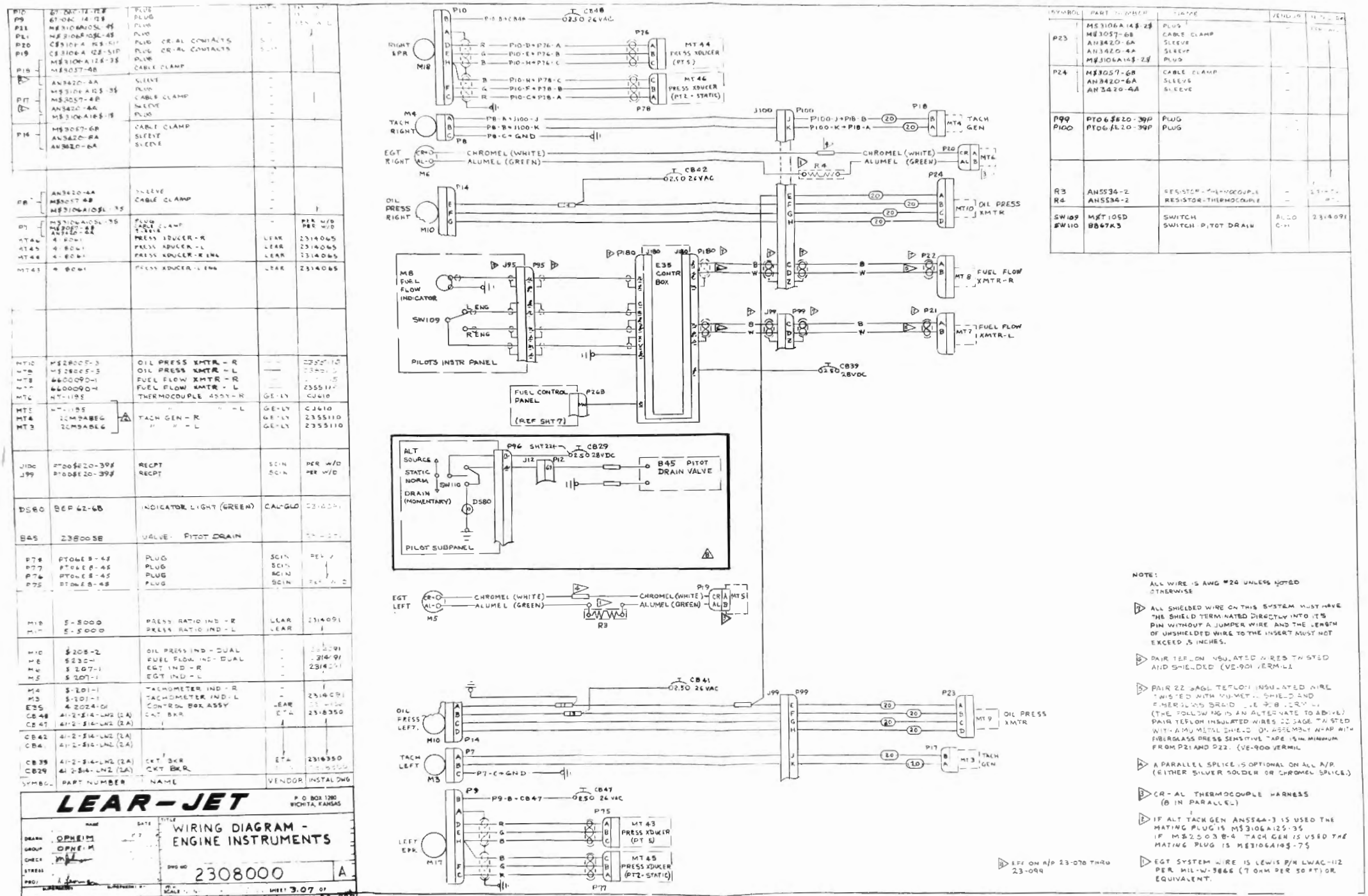

SYMBOL	PART NUMBER	NAME	VENDOR	INSTAL DWG
P23	MS3106A14S-2S M83057-6B AN3420-6A AN3420-4A MS3106A14S-2S	PLUG CABLE CLAMP SLEEVE SLEEVE PLUG		
P24	MS3057-6B AN3420-6A AN3420-4A	CABLE CLAMP SLEEVE SLEEVE	– –	
P99 P100	PT06SE20-39P PT06SE20-39P	PLUG PLUG	–	
R3 R4	AN5534-2 AN5534-2	RESISTOR-THERMOCOUPLE RESISTOR-THERMOCOUPLE	– –	
SW109 SW110	M5T10SD 8867K3	SWITCH SWITCH P/TOT DRAIN	ALCO C-H	2314091

NOTE:
ALL WIRE IS AWG #20 UNLESS NOTED OTHERWISE

7 ALL SHIELDED WIRE ON THIS SYSTEM MUST HAVE THE SHIELD TERMINATED DIRECTLY INTO IT'S PIN WITHOUT A JUMPER WIRE AND THE LENGTH OF UNSHIELDED WIRE TO THE INSERT MUST NOT EXCEED .5 INCHES.

5 PAIR TEFLON INSULATED WIRES TWISTED AND SHIELDED (VE-901 VERMILL

5 PAIR 22 GAGE TEFLON INSULATED WIRE TWISTED WITH MU-METAL SHIELD AND FIBERGLASS BRAID (VE 908 VERMILL (THE FOLLOWING IS AN ALTERNATE TO ABOVE) PAIR TEFLON INSULATED WIRES 22 GAGE TWISTED WITH A MU METAL SHIELD ON ASSEMBLY WRAP WITH FIBERGLASS PRESS SENSITIVE TAPE .5 IN MINIMUM FROM P21 AND P22. (VE-900 VERMIL

4 A PARALLEL SPLICE IS OPTIONAL ON ALL A/P (EITHER SILVER SOLDER OR CHROMEL SPLICE.)

3 CR-AL THERMOCOUPLE HARNESS (8 IN PARALLEL)

2 IF ALT TACH GEN AN5544-3 IS USED THE MATING PLUG IS MS3106A12S-3S IF MS25038-4 TACH GEN IS USED THE MATING PLUG IS MS3106A10S-7S

1 EGT SYSTEM WIRE IS LEWIS P/N LWAC-112 PER MIL-W-9866 (7 OHM PER 50 FT) OR EQUIVALENT.

6 EFF ON A/P 23-070 THRU 23-099

SYMBOL	PART NUMBER	NAME	VENDOR	INSTAL DWG
P7 P8 P9 P11 P20 P19 P18 P17 P16	67-00C-14-12S 67-00C-14-12S MS3106A10SL-4S MS3106B10SL-4S CS3106A-12S-3P CS3106A-12S-3P MS3106A12S-3S MS3057-4B AN3420-4A MS3106A12S-3S MS3057-4B AN3420-4A MS3106A16S-1S MS3057-6B AN3420-6A AN3420-6A	PLUG PLUG PLUG PLUG PLUG CR-AL CONTACTS PLUG CR-AL CONTACTS PLUG CABLE CLAMP SLEEVE PLUG CABLE CLAMP SLEEVE PLUG CABLE CLAMP SLEEVE SLEEVE	– – SCIN SCIN – – – – – – – – – –	PER A/C
P8 P7 MT46 MT45 MT44 MT43	AN3420-4A MS3057-4B MS3106A10SL-3S MS3057-4B AN3420-4A 4-80A1 4-80A1 4-80A1 4-80A1	SLEEVE CABLE CLAMP PLUG CABLE CLAMP SLEEVE PRESS XDUCER-R PRESS XDUCER-L PRESS XDUCER-R ENG PRESS XDUCER-L ENG	– – – – – LEAR LEAR LEAR LEAR	PER W/D PER W/D 2314065 2314065 2314065 2314065
MT10 MT9 MT8 MT7 MT6	MS28005F-3 MS28005F-3 66000901 66000901 MT-1195	OIL PRESS XMTR-R OIL PRESS XMTR-L FUEL FLOW XMTR-R FUEL FLOW XMTR-L THERMOCOUPLE 455°-R	— — — — GE-LY	2355110 2355110 2355110 2355110 CJ610
MT5 MT4 MT3	MT-1195 2CM9ABEG 2CM9ABLG	" " -L TACH GEN-R " " -L	GE-LY GE-LY GE-LY	CJ610 2355110 2355110
J100 J99	PT00SE20-39S PT00SE20-39S	RECPT RECPT	SCIN SCIN	PER W/D PER W/D
DS80	BEP 62-6B	INDICATOR LIGHT (GREEN)	CAL-GLO	2314091
B45	2380058	VALVE: PITOT DRAIN		
P78 P77 P76 P75	PT06E8-4S PT06E8-4S PT06E8-4S PT06E8-4S	PLUG PLUG PLUG PLUG	SCIN SCIN SCIN SCIN	PER A/C
M18 M17	5-5000 5-5000	PRESS RATIO IND-R PRESS RATIO IND-L	LEAR LEAR	2314091
M10 M8 M6 M5	S208-2 S230-1 S207-1 S207-1	OIL PRESS IND-DUAL FUEL FLOW IND-DUAL EGT IND-R EGT IND-L	– – – –	2314091 2314091 2314091
M4 M3 E35 CB48 CB47	S-201-1 S-201-1 4-2024-01 41-2-5A-LN2 (2A) 41-2-5A-LN2 (2A)	TACHOMETER IND-R TACHOMETER IND-L CONTROL BOX ASSY CKT BKR "	– – LEAR ETA "	2314091 2314091 2318350
CB42 CB41	41-2-5A-LN2 (2A) 41-2-5A-LN2 (2A)			
CB39 CB29	41-2-5A-LN2 (2A) 41-2-5A-LN2 (2A)	CKT BKR CKT BKR	ETA "	2318350

SYMBOL	PART NUMBER	NAME	VENDOR	INSTAL DWG

LEAR-JET P.O. BOX 1288 WICHITA, KANSAS

	NAME	DATE
DRAWN	OPHEIM	
GROUP	OPHEIM	
CHECK		
STRESS		
PROJ		

TITLE: WIRING DIAGRAM - ENGINE INSTRUMENTS

DWG NO 2308000 A

SCALE: NONE SHEET 3.07 OF

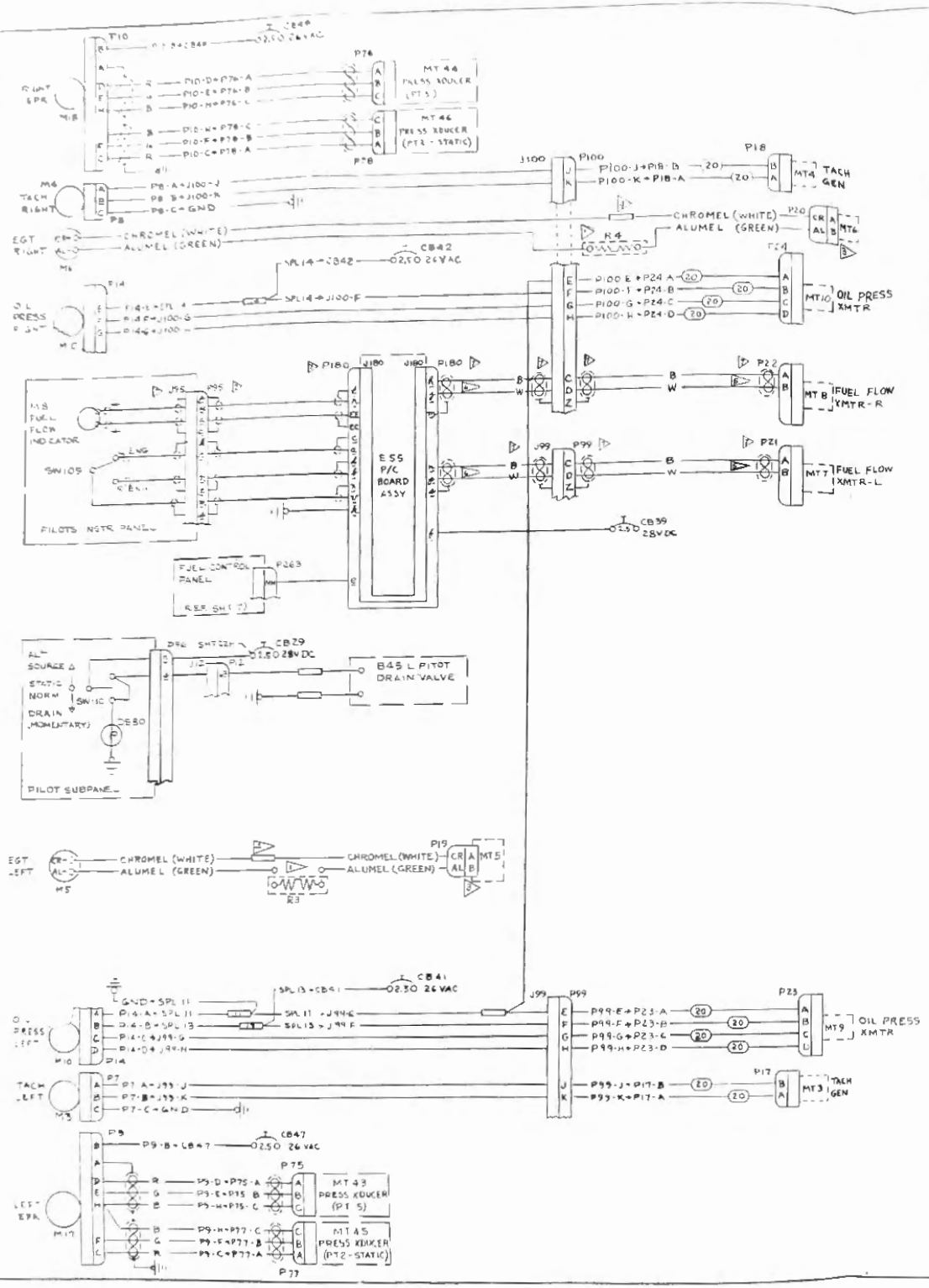

SYMBOL	PART NUMBER	NAME	VENDOR	INSTAL DWG
P23	MS3106A14S-2S	PLUG	-	PER W/D
	MS3057-6B	CABLE CLAMP	-	
	AN3420-4A	SLEEVE	-	
	AN3420-4A	SLEEVE	-	
	MS3106A14S-2S	PLUG	-	
P24	MS3057-6B	CABLE CLAMP	-	
	AN3420-6A	SLEEVE	-	
	AN3420-4A	SLEEVE	-	
P98	PTO6SE20-39P	PLUG	SCIN	
P100	PTO6SE20-39P	PLUG	SCIN	
R3	AN5534-2	RESISTOR-THERMOCOUPLE	-	PER W/D 2318060
R4	AN5534-2	RESISTOR-THERMOCOUPLE	-	2318060
SW109	MST105D	SWITCH	ALCO	2314091
SW110	BB67K5	SWITCH-PITOT DRAIN	C-H	2314091

NOTE.

1. ALL WIRE IS AWG #24 UNLESS NOTED OTHERWISE

2. ALL SHIELDED WIRE ON THIS SYSTEM MUST HAVE THE SHIELD TERMINATED DIRECTLY INTO IT'S PIN WITHOUT A JUMPER WIRE, AND THE LENGTH OF UNSHIELDED WIRE TO THE INSERT MUST NOT EXCEED .5 INCHES.

3. PAIR TEFLON INSULATED WIRES TWISTED AND SHIELDED (VE-901 VERMIL)

4. PAIR 22 GAGE TEFLON INSULATED WIRE TWISTED WITH MU-METAL SHIELD AND FIBERGLASS BRAID (VE-908 VERMIL). (THE FOLLOWING IS AN ALTERNATE TO ABOVE) PAIR TEFLON INSULATED WIRES 22 GAGE TWISTED WITH A MU-METAL SHIELD. ON ASSEMBLY WRAP WITH FIBERGLASS PRESS SENSITIVE TAPE IS IN MINIMUM FROM P21 AND P22. (VE-900 VERMIL)

5. A PARALLEL SPLICE IS OPTIONAL ON ALL A/P (EITHER SILVER SOLDER OR CHROMEL SPLICE)

6. CR - AL THERMOCOUPLE HARNESS (8 IN PARALLEL)

7. IF ALT TACH GEN AN5544-3 IS USED THE MATING PLUG IS MS3106A12S-3S. IF MS2508-8-4 TACH GEN IS USED THE MATING PLUG IS MS3106A14S-2S

8. EGT SYSTEM WIRE IS LEWIS P/N LWAC-112 PER MIL-W-5846 (7 OHM PER 50 FT) OR EQUIVALENT.

SYMBOL	PART NUMBER	NAME	VENDOR	INSTAL DWG
P8	ET-08JE-14-19S	PLUG	AMPH	PER W/D
P9	MS3106A14S-2S	PLUG	AMPH	PER W/D
P22	MS3106A10SL-3S	PLUG		
P21	MS3106A10SL-3S	PLUG		
P20	CR-AL	TC-AL CONTACTS	-	
P25	CR-AL	TC-AL CONTACTS	-	
P18	MS3106A14S-2S	PLUG		
	MS3057-6B	CABLE CLAMP	-	
P17	AN3420-4A	SLEEVE	-	
	MS3106A14S-2S	PLUG		
	MS3057-4B	CABLE CLAMP		
	AN3420-6A	SLEEVE		
	MS3106A16S-1S	PLUG		
P14	MS3057-6B	CABLE CLAMP	-	
	AN3420-8A	SLEEVE		
	AN3420-6A	SLEEVE		
P8	AN3420-4A	SLEEVE	-	
	MS3057-4B	CABLE CLAMP	-	
	MS3106A10SL-3S		-	
P7	MS3106A10SL-3S	PLUG	-	PER W/D
	MS3057-4B	CABLE CLAMP	-	PER W/D
	AN3420-4A	SLEEVE	-	
MT46	4-8061	PRESS XDUCER-R	LEAR	2314065
MT45	4-8061	PRESS XDUCER-L	LEAR	2314065
MT44	4-8061	PRESS XDUCER-R ENG	LEAR	2314065
MT43	4-8061	PRESS XDUCER-L ENG	LEAR	2314065
MT10	MS28005-3	OIL PRESS XMTR-R		2355110
MT9	MS28005-3	OIL PRESS XMTR-L		2355110
MT8	6600090-1	FUEL FLOW XMTR-R		2355115
MT7	6600090-1	FUEL FLOW XMTR-L		2355115
MT6	HT-1195	THERMOCOUPLE ASSY-R	GE-LY	C2610
MT5	HT-1195	" " -L	GE-LY	C2610
MT4	2CM9ABEG	TACH GEN-R	GE-LY	2355110
MT3	2CM9ABEG	" " -L	GE-LY	2355110
J100	PTO06E20-39S	RECP	SCIN	PER W/D
J99	PTO06E20-35S	RECP	SCIN	PER W/D
DS80	BEP 82-68	INDICATOR LIGHT (GREEN)	GE-LY	4308 20
B45	2380058	VALVE-L PITOT DRAIN	-	2314071
P78	PTO6E8-4S	PLUG	SCIN	PER W/D
P77	PTO6E8-4S	PLUG	SCIN	
P76	PTO6E8-4S	PLUG	SCIN	
P75	PTO6E8-4S	PLUG	SCIN	PER W/D
E55	4-2024SA-1 (WITH BROWN DOT)	FUEL MONITOR P/C BOARD ASY	LEAR	28 & DG
M18	5-5000	PRESS RATIO IND-R	LEAR	2314091
M17	5-5000	PRESS RATIO IND-L	LEAR	
M10	5-208-2	OIL PRESS IND-DUAL	-	2314091
M8	5230-1	FUEL FLOW IND-DUAL	-	2314091
M6	5-207-1	EGT IND-R	-	2314091
M5	5-207-1	EGT IND-L	-	
M4	5-201-1	TACHOMETER IND-R	-	
M3	5-201-1	TACHOMETER IND-L	-	2314091
CB48	41-2-5A-LN2 (2A)	CKT BKR	ETA	2318350
CB47	41-2-5A-LN2 (2A)			
CB42	41-2-5A-LN2 (2A)			
CB41	41-2-5A-LN2 (2A)			
CB39	41-2-5A-LN2 (2A)	CKT BKR	ETA	2318350
CB29	41-2-5A-LN2 (2A)	CKT BKR	ETA	2318350

SYMBOL	PART NUMBER	NAME	VENDOR	INSTAL DWG

LEAR-JET P.O. BOX 1380 WICHITA, KANSAS

	NAME	DATE
DRAWN	OPHEIM	8-21-68
GROUP	OPHEIM	8-21-68
CHECK		8-21-68
STRESS		
PROJ		8-21-68

TITLE: WIRING DIAGRAM - ENGINE INSTRUMENTS

DWG NO 2308000 A

SCALE NONE SHEET 3.09 OF

AIRCRAFT 23-098 THRU 23-099

9-9/9-10

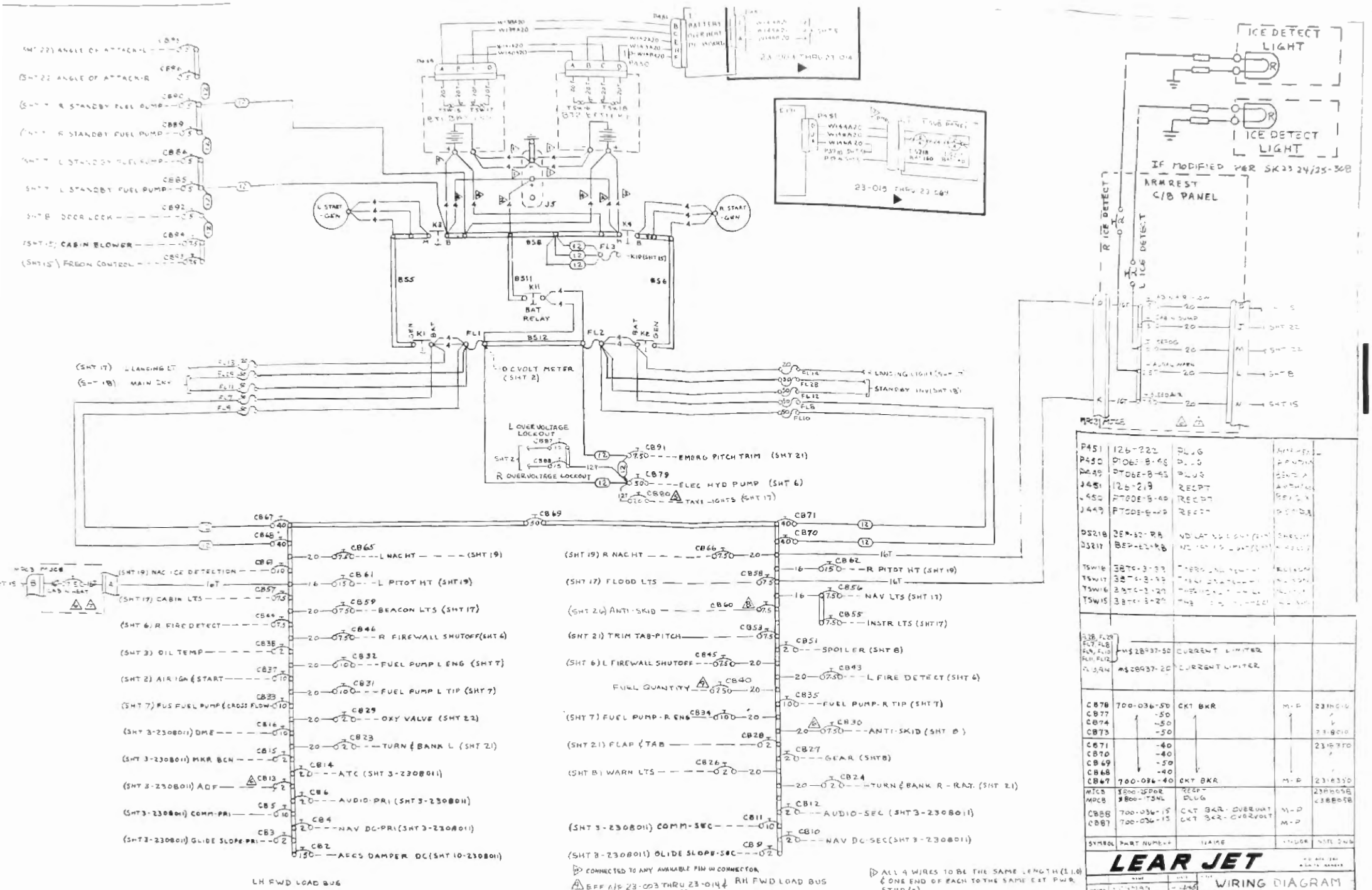

SYMBOL	PART NUMBER	NAME	VENDOR	NSTL DWG
P451	126-222	PLUG		
P450	PT06E-8-4S	PLUG		
P449	PT06E-8-4S	PLUG		
J451	126-219	RECPT		
J450	PT00E-8-4P	RECPT		
J449	PT00E-8-4P	RECPT		
DS218	3EP-62-RB	INDICATING LIGHT		
DS217	3EP-62-RB	INDICATING LIGHT		
TSW16	3BTC-3-33	THERMOSTATIC SWITCH		
TSW17	3BTC-3-33	THERMOSTATIC SWITCH		
TSW16	3BTC-3-20	THERMOSTATIC SWITCH		
TSW15	3BTC-3-20	THERMOSTATIC SWITCH		
FL28, FL29, FL7, FL8, FL9, FL10, FL11, FL12	M$28937-50	CURRENT LIMITER		
FL13, FL14	M$28937-20	CURRENT LIMITER		
CB78	700-036-50	CKT BKR	M-P	2318010
CB77	-50			
CB74	-50			
CB73	-50			2318010
CB71	-40			2318350
CB70	-40			
CB69	-50			
CB68	-40			
CB67	700-036-40	CKT BKR	M-P	2318350
MJCB	$800-25POR	RECPT		2388058
MPCB	$800-17SNL	PLUG		2388058
CB88	700-036-15	CKT BKR-OVERVOLT	M-P	
CB87	700-036-15	CKT BKR-OVERVOLT	M-P	

CONNECTED TO ANY AVAILABLE PIN IN CONNECTOR

EFF A/P 23-003 THRU 23-014 & 23-040 THRU 23-099.

EFF A/P 23-003 THRU 23-014

ON A/P 23-003 THRU 23-014 OMIT CONNECTIONS TO MPCB & MJCB

A/P 23-015 THRU 23-069

A/P 23-003 THRU 23-027

ALL 4 WIRES TO BE THE SAME LENGTH (±1.0) & ONE END OF EACH TO THE SAME EXT PWR STUD (-)

BOTH WIRES TO BE THE SAME LENGTH (±1.0)

BOTH WIRES TO BE THE SAME LENGTH (±1.0)

BOTH WIRES TO BE THE SAME LENGTH (±1.0)

LEAR JET

WIRING DIAGRAM
DC PWR DISTR

2308000 A

SCALE NONE 4.06

AIRCRAFT 23-003 THRU 23-069 9-11

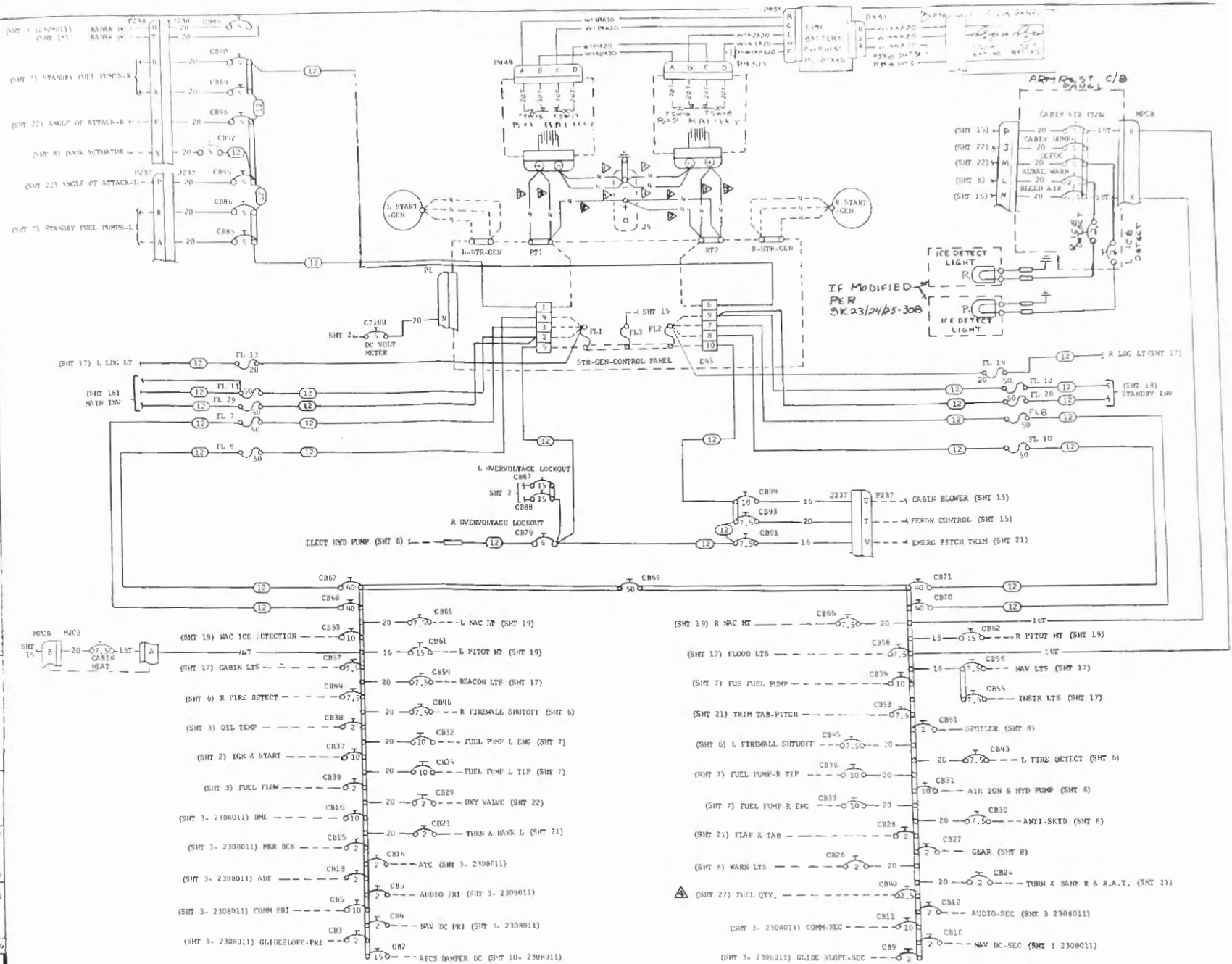

SYMBOL	PART NUMBER	NAME	VENDOR	DWG NO
FL1 FL2 FL3	MS26937-50	CURRENT LIMITER		
FL4 FL5 FL6 FL7 FL8 FL9 FL10 FL11 FL12 FL13 FL14 FL15 FL16 FL17 FL18 FL19 FL20 FL21 FL22 FL23 FL24 FL25 FL26 FL27 FL28 FL29	MS26937-50	CURRENT LIMITER	—	—
DS215	3PP162-RP	INDICATING LIGHT (RED)	SHELLY	
DS217	3PP162-AG	INDICATING LIGHT (GRN)	SHELLY	
TSW5	3-GTG-3-39	THERMOSWITCH-HI	KLIXON	
TSW7	3-GTG-3-39	THERMOSWITCH-HI	KLIXON	
TSW16	3-GTL-2-39	THERMOSWITCH-LO	KLIXON	
TSW18	3-GTL-3-39	THERMOSWITCH-LO	KLIXON	
P451	126-122	PLUG		
P450	PT06F-8-4S	PLUG		
P449	PT06F-8-4S	PLUG		
P238	PT06F-22-55P	PLUG		
P237	PT06F-22-21P	PLUG		
J451	126-219	RECPT		
J450	MS3102-8-4P	RECPT		
J449	PT06F-8-4S	RECPT		
J238	MS3102E22-21P	RECPT	SCIN	2318014
J237	MS3102E22-21P	RECPT	SCIN	2318014
CB78	7201036-50	CKT BKR	M-P	2318014
CB77	-50			
CB74	-50			2318014
CB73	-50			
CB71	-40			2318350
CB70	-40			
CB69	-50			
CB68	-40			
CB67	7201036-40	CKT BKR	M-P	2318350
MPCB	2300-2FFOR	RECPT		2308058
MPCB	2300-1FFOR	PLUG		2308058
CB88	7201036-15	CKT BKR-OVER VOLT		
CB87	7201036-15	CKT BKR-OVER VOLT		

LEAR JET			
DRAWN	DATE	TITLE	WIRING DIAGRAM - DC PWR DISTR.
CHECKED		SIZE	DWG NO. 2308000 A
STRESS		SCALE	NONE
PROJ.		DATE	11-15-66
SUPERSEDES	SUPERSEDED BY		4.09

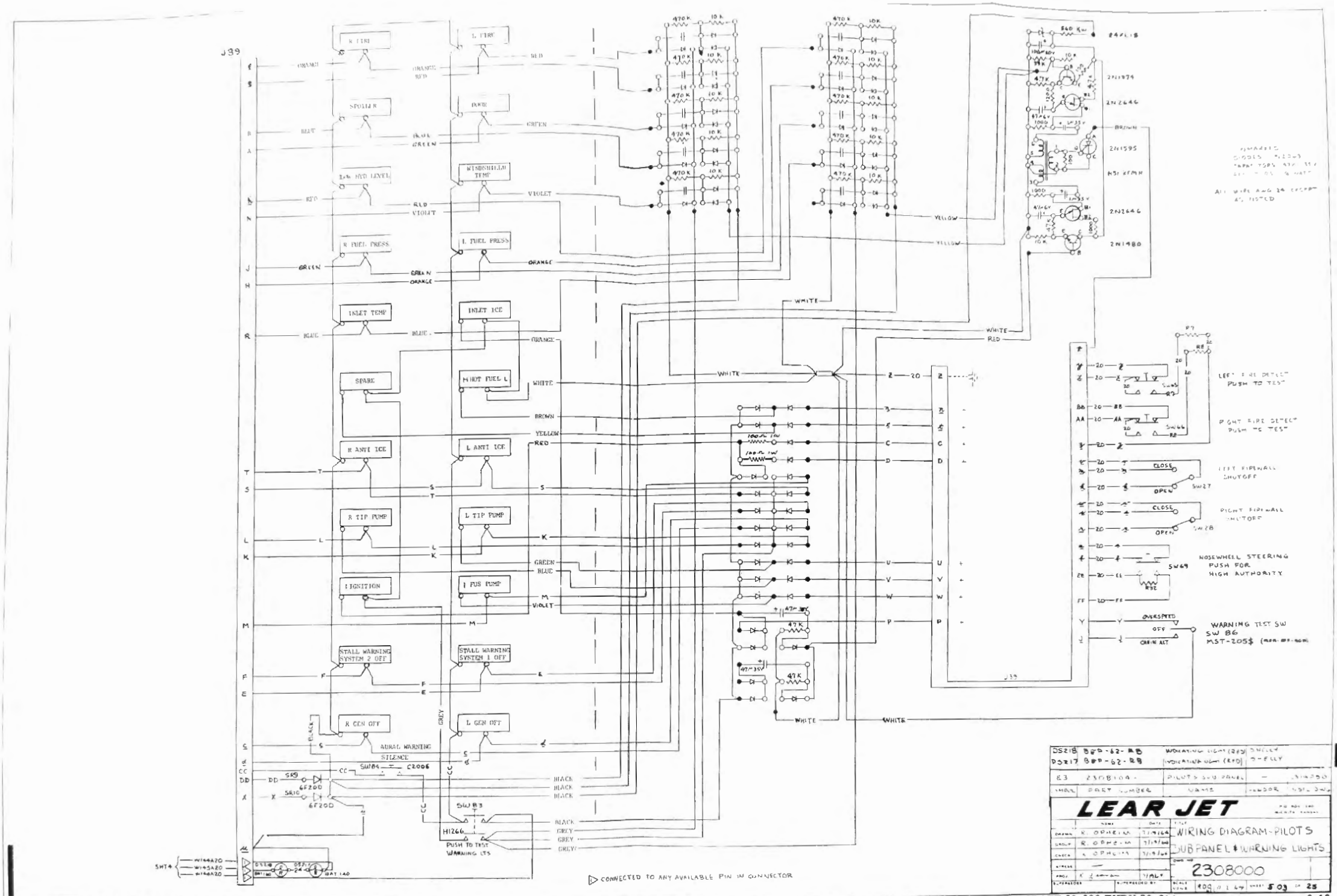
J39
R FIRE
L FIRE
SPOILER
DOOR
LOW HYD LEVEL
WINDSHIELD TEMP
R FUEL PRESS
L FUEL PRESS
INLET TEMP
INLET ICE
SPARE
H HOT FUEL L
R ANTI ICE
L ANTI ICE
R TIP PUMP
L TIP PUMP
IGNITION
I FUS PUMP
STALL WARNING SYSTEM 2 OFF
STALL WARNING SYSTEM 1 OFF
R GEN OFF
L GEN OFF
AURAL WARNING SILENCE
SW84
C2006
SW83
H1266
PUSH TO TEST WARNING LTS
SHT4
W144A20
W145A20
W146A20
BAT 140
CONNECTED TO ANY AVAILABLE PIN IN CONNECTOR
2N1374
2N2646
2N1595
2N1480
LEFT FIRE DETECT PUSH TO TEST
RIGHT FIRE DETECT PUSH TO TEST
LEFT FIREWALL SHUTOFF
RIGHT FIREWALL SHUTOFF
NOSEWHEEL STEERING PUSH FOR HIGH AUTHORITY
WARNING TEST SW SW 86 MST-205$
CLOSE
OPEN
OVERSPEED
OFF
CABIN ALT
DS218 BEP-62-RB
DS217 BEP-62-RB
E3 2308104
PILOTS SUB PANEL
PART NUMBER
NAME
LEAR JET
WIRING DIAGRAM-PILOTS SUB PANEL & WARNING LIGHTS
2308000
SHEET 5 OF 25

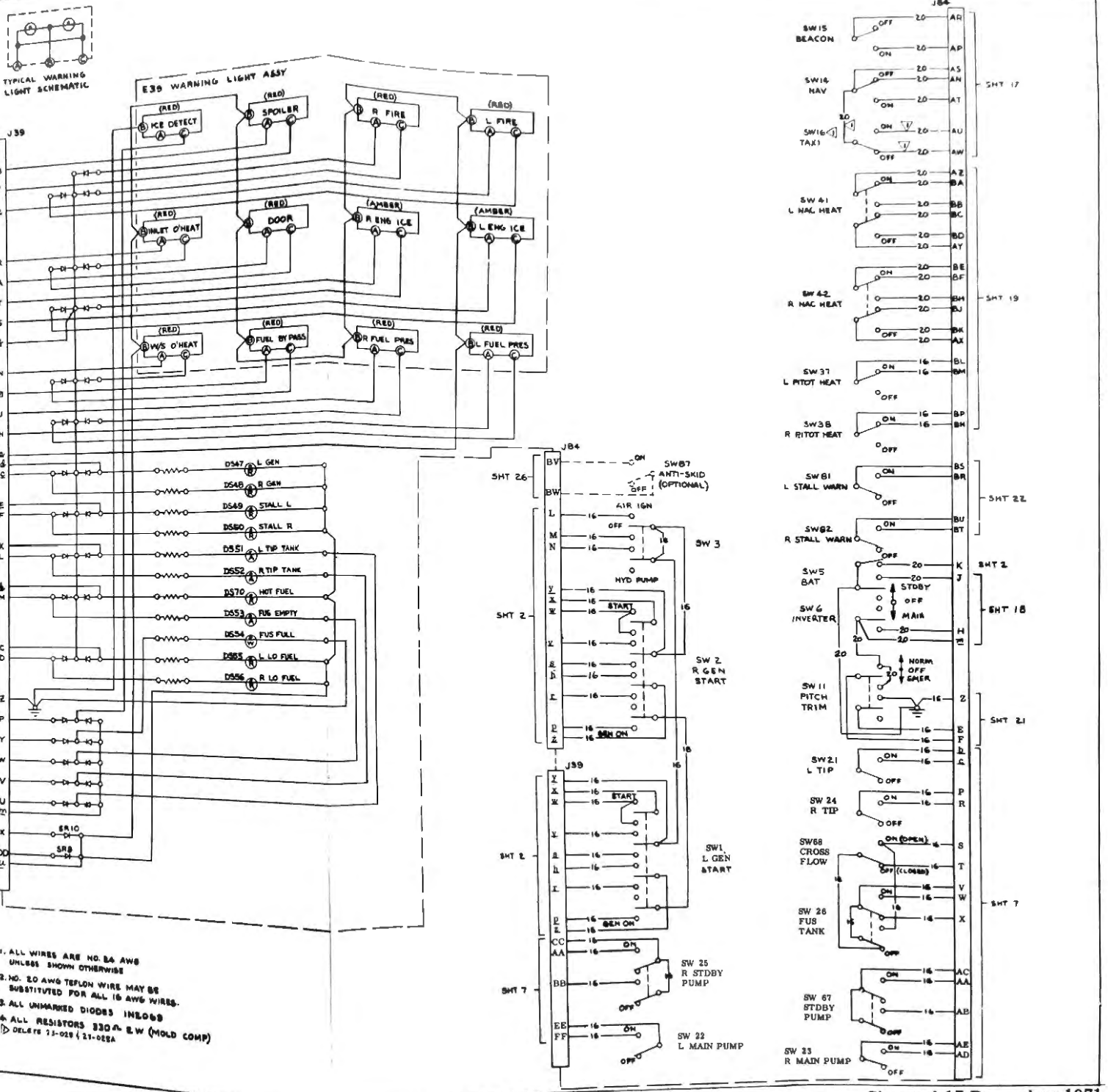

NOTES:

1. ALL WIRES ARE NO. 24 AWG UNLESS SHOWN OTHERWISE
2. NO. 20 AWG TEFLON WIRE MAY BE SUBSTITUTED FOR ALL 16 AWG WIRES.
3. ALL UNMARKED DIODES IN4003
4. ALL RESISTORS 330Ω 2 W (MOLD COMP)
   Δ DELETE 23-029 & 23-028A

SYMBOL	PART NUMBER	NAME	VENDOR	INSTL DWG
SR10	6F20D	DIODE	IR	2318360
SR9	6F20D	DIODE	IR	2318360
	201346-2	HOOD	AMP	2318360
J84	201047-4 (2 EA)	GUIDE SOCKET (F)		
	201046-4	GUIDE PINS (M)		
	200875-2 (2 EA)	JACKSCREWS (F)		
	42980-1 (64 EA)	SOCKET		
	201037-1	HOUSING		
J39	201390-2	PIN GUARD		
	200833-4	GUIDE PINS (M)		
	200835-4 (3 EA)	GUIDE SOCKET (F)		
	200875-2 (2 EA)	JACKSCREWS (F)		
	42980-1 (50 EA)	SOCKET		
	200277-2	HOUSING	AMP	2318360
D570	MS25446-4	INDICATING LIGHT (RED)	DIALCO	2316360
D556	-6	(RED)		
D555	-6	(RED)		
D554	-5	(WHITE)		
D553	-6	(AMBER)		
D552	-6	(AMBER)		
D551	-6	(AMBER)		
D550	-4	(RED)		
D549	-4	(RED)		
D548	-4	(RED)		
D547	MS25446-4	INDICATING LIGHT (RED)	DIALCO	2318360
	(SEE NOTE 4)	RESISTORS	-	2318360
	(SEE NOTE 3)	DIODES	-	2318360
E 39	660802-1	WARNING LIGHT ASSY	-	2318360

LEAR JET

	NAME	DATE
DRAWN	ROBB-MS	4-12-68
GROUP		
LINES		
STORES		
PROJ		
SUPERVISOR	SUPERVISED BY	

TITLE: WIRING DIAGRAM - SWITCH & WARNING LIGHT PANEL

DWG NO. 2308000 | A

SCALE: NONE | SHEET 5.05

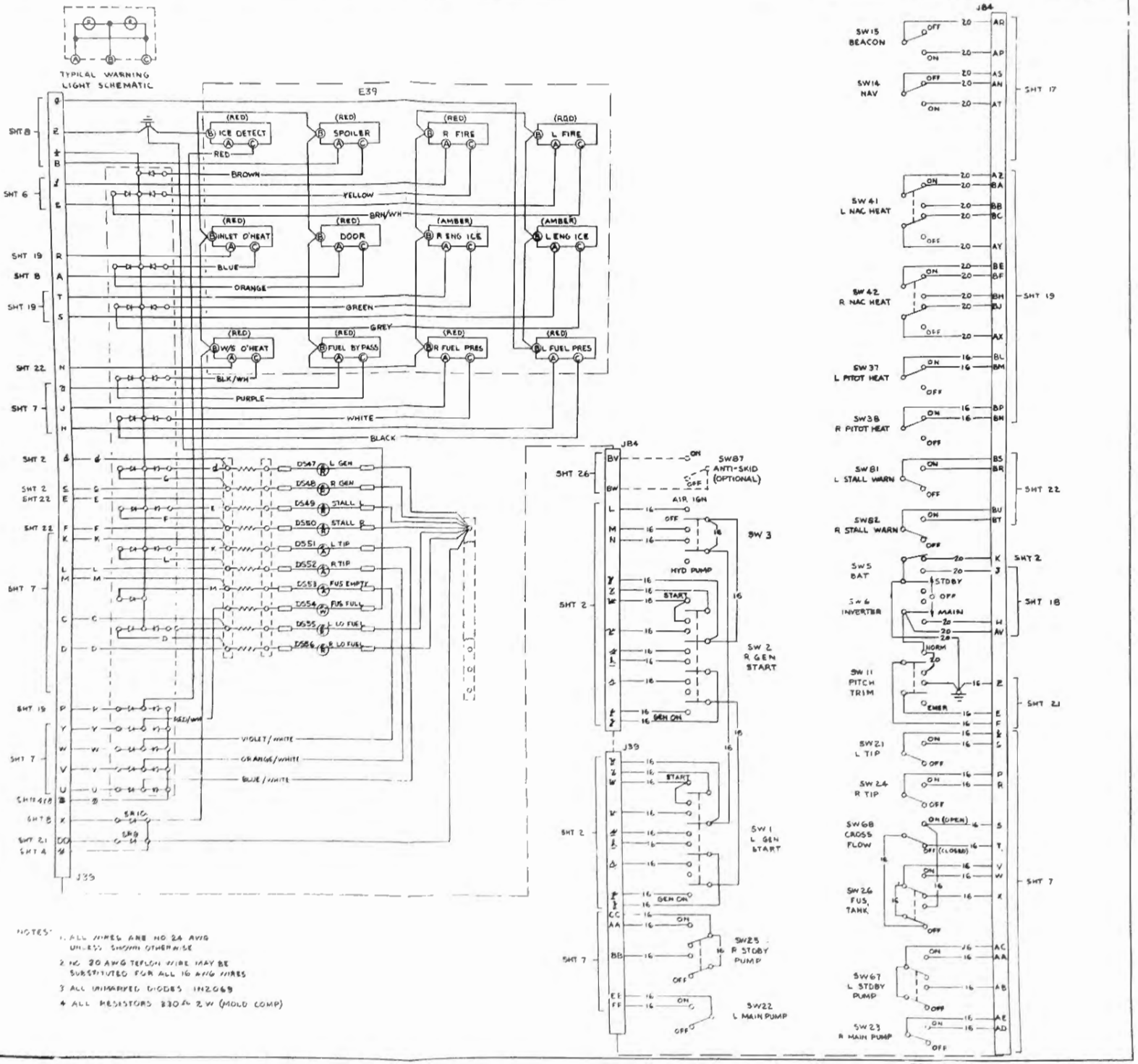

SYMBOL	PART NUMBER	NAME	VENDOR	INSTL DWG
SR10	6F20D	DIODE	IR	2318360
SR9	6F20D	DIODE	IR	2318360
	201346-2	HOOD	AMP	2318360
J84	201043-4 (3 EA)	GUIDE SOCKET (F)		
	201046-4	GUIDE PINS (M)		
	200835-2 (2 EA)	JACKSCREWS (F)		
	42980-1 (4 EA)	SOCKET		
	201087-1	HOUSING		
J35	201390-2	PIN GUARD		
	200833-4	GUIDE PINS (M)		
	200835-4 (3 EA)	GUIDE SOCKET (F)		
	200875-2 (2 EA)	JACKSCREWS (F)		
	42980-1 (50 EA)	SOCKET		
	200277-2	HOUSING	AMP	2318360
DS54	-4	(RED)		
DS55	-4	(RED)		
DS56	-5	(WHITE)		
DS53	-6	(AMBER)		
DS52	-6	(AMBER)		
DS51	-6	(AMBER)		
DS50	-4	(RED)		
DS49	-4	(RED)		
DS48	-4	RED		
DS47	MS25446-4	INDICATING LIGHT (RED)	DIALCO	2318360
	(SEE NOTE 4)	RESISTORS	-	2318360
	(SEE NOTE 3)	DIODES	-	2318360
E39	660B021	WARNING LIGHT ASSY	-	2318360

NOTES:
1. ALL WIRES ARE NO 24 AWG UNLESS SHOWN OTHERWISE
2. NO 20 AWG TEFLON WIRE MAY BE SUBSTITUTED FOR ALL 16 AWG WIRES
3. ALL UNMARKED DIODES IN2069
4. ALL RESISTORS 330Ω 2W (MOLD COMP)

LEAR JET

DRAWN	ROBBINS	5-5-67
GROUP	830	5-5-67
CHECK		5-5-67
STRESS		
PROJ		
SUPERVISOR	SUPERSEDES BY	

TITLE: WIRING DIAGRAM - SWITCH & WARNING LIGHT PANEL

SIZE: 2308000 | A

SCALE: 1:1 1/2 | SHEET 507 OF

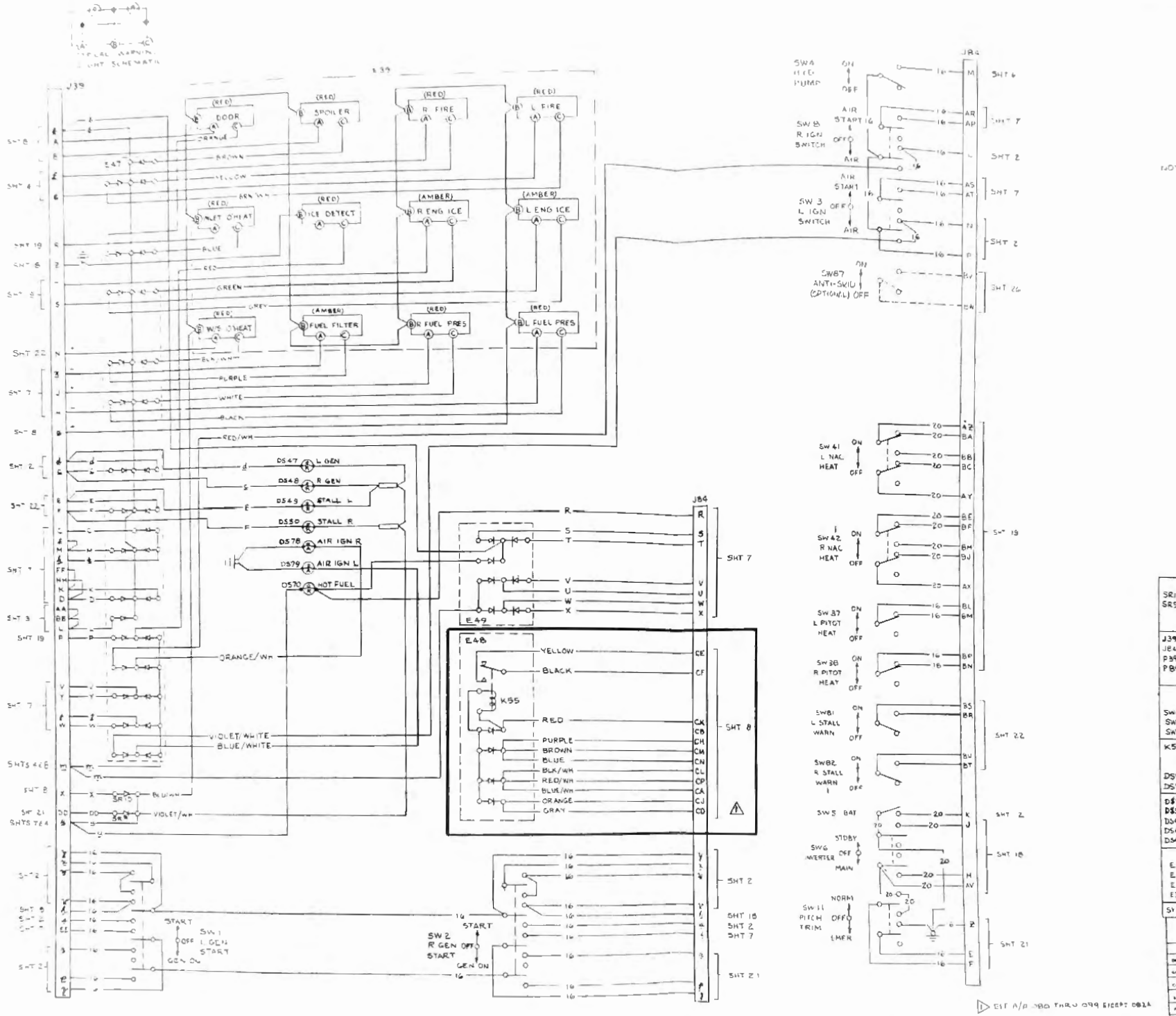

NOTES

1. ALL WIRES ARE NO 24 AWG UNLESS SHOWN OTHERWISE
2. NO 20 AWG TEFLON WIRE MAY BE SUBSTITUTED FOR ALL NO 16 AWG WIRES
3. ALL UNMARKED DIODES 1N2069

SYM	PART NUMBER	NAME	VENDOR	INSTAL DWG
SR10	6F20D	DIODE	[illegible]	23-8370
SR9	6F20D	DIODE	15	
J39	8803-10 FPC	RECPT	-	
J84	8805-10 FPC	RECPT		23-8370
P39	(REF SHT 8)			
P84	(REF SHT 2)			
SW6	8B6AK1	(SEE SHT 18)		
SW8	8B5BK42	SWITCH - IGN	[illegible]	23-8370
SW3	8B5BK42	SWITCH - IGN	[illegible]	[illegible]
K55	(PART OF E48)			
DS70	RDL-A1 (F2-327)	IND LIGHT (RED)	TEC	23-8370
DS79	BEP62-AB	IND LIGHT (AMBER)	[illegible]	23-8370
DS78	BEP62-AB	IND LIGHT (AMBER)	CAL-GLO	23-8370
DS50	BEP62-RB	(RED)		
DS49	BEP62-RB	(RED)		
DS48	BEP62-RB	(RED)		
DS47	BEP62-RB	IND LIGHT (RED)	CAL-GLO	23-8370
E49	2200C (1 SEC)	TERM BOARD	USECO	23-8370
E48	2308118-1	GEAR WARN PC BD	—	23-8370
E47	2308115-1	WARN LT PC BOARD	—	23-8370
E39	6608024	WARNING LIGHT ASSY	—	23-8370

LEAR JET

P.O. BOX 1200 WICHITA, KANSAS

	NAME	DATE
DRAWN	ROBBINS	9-17-65
GROUP	[illegible]	9-21-65
CHECK	[illegible]	9-27-65
STRESS		
PROJ		

TITLE: WIRING DIAGRAM - SWITCH & WARNING LIGHT PANEL

DWG NO 2308000 A

SCALE REV 1-15 SHEET 5, 12

1 EFF A/P 080 THRU 099 EXCEPT 082A

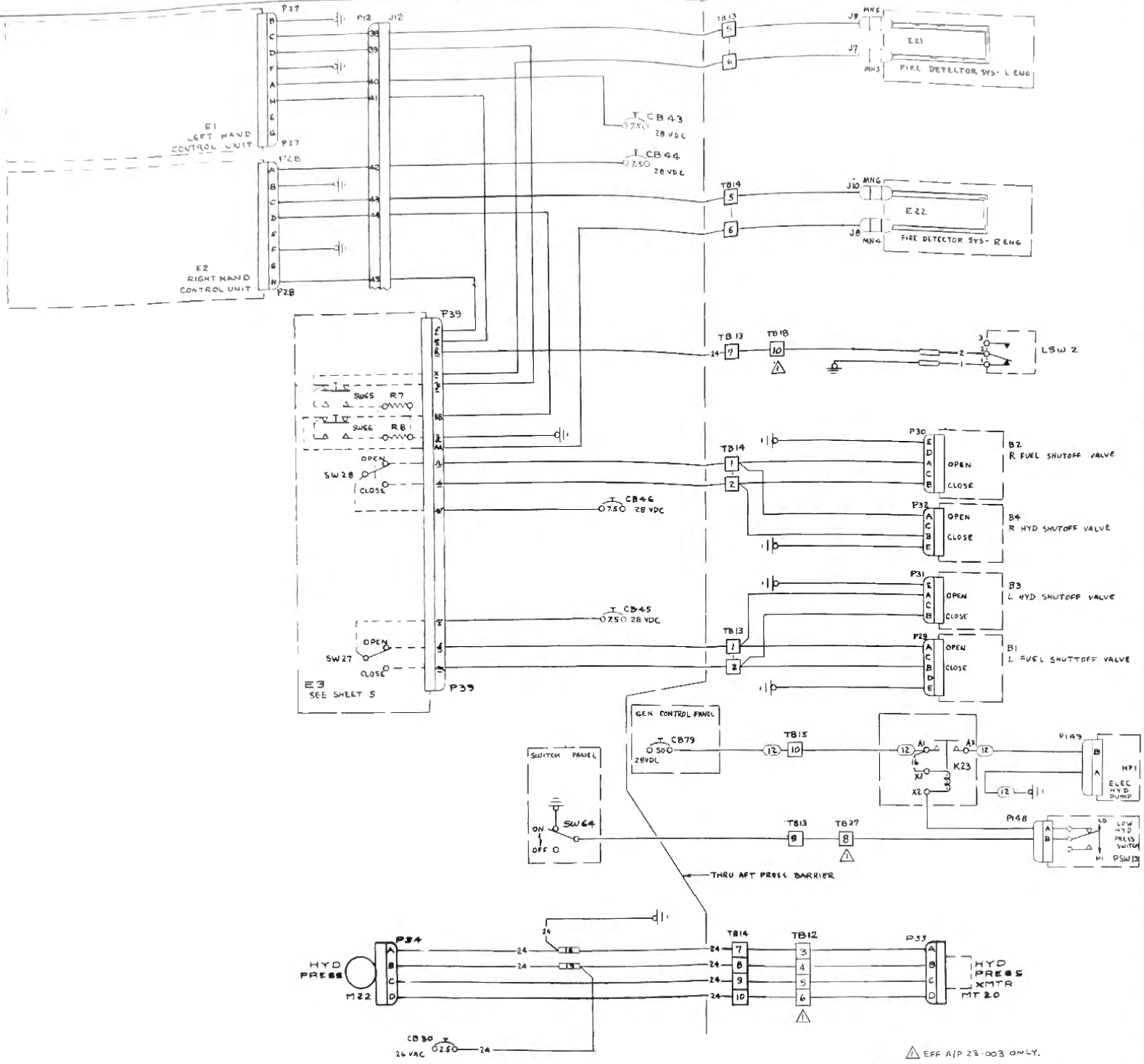

SYMBOL	PART NUMBER	NAME	VENDOR	VITAL DWG
J12	200730-1 201047-6 201046-6 200875-2 200874-2 42981-1 201310-1 201368-2 200730-1	CLAMP CORNER GUIDE PINS (F) CORNER GUIDE PINS (M) JACKSCREWS (F) JACKSCREWS (M) SOCKETS HOUSING SHARD CLAMP	AMP	PER MD
P12	201046-4 201047-4 (3EA) 201368-2 201346-2 42980-1 (7 EA)	CORNER GUIDE PINS (M) CORNER GUIDE PINS (F) JACKSCREWS (M) JACKSCREWS (F) PINS	AMP	
P148	201311-1 MS3106A18-3S MS3057-10B AN3420-10A AN3420-6A	HOUSING PLUG CABLE CLAMP SLEEVE SLEEVE	AMP – – –	
P148	MS3106A12S-3S MS3057-6B AN3420-6A AN3420-4A	PLUG CABLE CLAMP SLEEVE SLEEVE	– – –	PER MD
P39	(SEE SHT 8)	PLUG		
P34 P33 P32	MS3108R-14S-2S MS3108R-14S-2S PT06SE-14-5S	PLUG PLUG PLUG	– – SCIN	PER MD
P31 P30 P29 P28 P27	PT06SE-14-5S PT06SE-14-5S PT06SE-14-5S PT06SE-12-6S PT06SE-12-8S	PLUG PLUG PLUG PLUG PLUG	SCIN SCIN – SCIN SCIN	
J10 J9	840936 840936	SOCKET RECEPT-RH SOCKET RECEPT-LH	KIDDE KIDDE	
J8 J7 K23	840936 840936 AN3350-1	SOCKET RECEPT-RH SOCKET RECEPT-LH RELAY - ELEC HYD PUMP	KIDDE KIDDE –	PER MD 2318351
MN6	208101 & 207865	CONN JOINT PLATE & JAM NUT	KIDDE	2351024
MN5 MN4 MN3 R8 R7	208101 & 207865 F117 F117	CONN JOINT PLATE & JAM NUT RESISTOR (250Ω 10W) RESISTOR (250Ω 10W)	KIDDE OHM OHM	2351024 – –
SW66 SW65	C2006 C2006	PART OF E3	SWITCH - FIRE DETECTION TEST SWITCH - FIRE DETECTION TEST	C-C C-C	– –
SW28 SW27	B810K12 T1003		SHUTOFF FIRE RH SHUTOFF FIRE LH	C-H C-C	– –
HP1 B4 B3 B2 B1	2380007 AV24-B11198 AV24-B11198 AV24-B11198 AV24-B11198		ELEC HYD PUMP GATE VALVE - HYD SHUTOFF(R) GATE VALVE - HYD SHUTOFF(L) VALVE - FUEL SHUTOFF RH VALVE - FUEL SHUTOFF LH	– GE-CO GE-CO GE-CO GE-CO	2317018 2317018 2317018 2326001 2326001
LSW2 PSW13	G1F-5400-3 2380036		HYD LOW LEVEL SWITCH HYD LOW PRESS SWITCH	AIRCO –	2317021 2317018
SW64	B801K13		SWITCH - ELEC HYD PUMP	C-H	2318350
MT20	ST 106N		XMTR - HYD PRESS	US GAGE	2317018
M22	5212-1		IND - HYD PRESS	–	2314050
E22 E21	2351024 2351024		FIRE DETECTOR SYS - R ENG FIRE DETECTOR SYS - L ENG	– –	2355000 2355000
CB 30 CB 46 CB 45 CB 44 CB 43	BC1-2 BC1-7 BC1-7	CKT BKR CKT BKR CKT BKR	BRILES BRILES BRILES	2318350 2318350
CB 79	BC1-50	CKT BKR	BRILES	2318010
E3 E2 E1	(SEE SHT 5) 892121-0350 892121-0350	WARNING LIGHTS CONTROL UNIT RH CONTROL UNIT LH	– KIDDE KIDDE	– 2314023 2314023

LEAR-JET P. O. BOX 1289 WICHITA, KANSAS

	NAME	DATE
DRAWN	HERMAN	3-18-63
GROUP	OPREM	3-18-63
CHECK		3-18-63
STRESS		
PROJ		3-18-63

TITLE: WIRING DIAGRAM - FIRE DETECTION & HYDRAULIC IND.

DWG NO 2308000 A

SCALE NONE | 11 JUNE 63 | SHEET 6.05 OF

Symbol	Part Number	Name	Vendor	Vendor's Dwg
P183	(REF SHT 7)			
	MS3106A-...	PLUG		
	MS3057-4B	CABLE CLAMP		
P186	AN3420-4A	SLEEVE		
	MS3106A-18-3S	PLUG		
P28	MS3057-8	CABLE CLAMP		
	AN3420-6A	SLEEVE		
	AN3420-4A	SLEEVE		
P32	PT06SE-14-5S	PLUG		
P3	PT06SE-14-5S	PLUG		
P30	PT06SE-14-5S	PLUG		
P29	PT06SE-14-5S	PLUG		
P28	PT06SE-...	PLUG		
P27	PT06SE-...-5S	PLUG		
J8	842936	SOCKET RECEPT-RH	KIDDE	
J7	840936	SOCKET RECEPT-LH	KIDDE	
K23	AN3350-1	RELAY - ELEC HYD PUMP		
P184	(REF SHT 7)			
MN6	20810 & 20T865	CONN JOINT PLATE & JAM NUT	KIDDE	2351024
MN5				
MN4				
MN3	20810 & 20T865	CONN JOINT PLATE & JAM NUT	KIDDE	2351024
R8	F1/2	RESISTOR (250Ω 1/2W)	OHM	
R7	F1/2	RESISTOR (250Ω 1/2W)	OHM	
SW65	MST205R	SWITCH - FIRE DETECTION TEST	ALCO	
SW28	8824K8	SWITCH - R FIREWALL SHUTOFF	C-H	
SW27	5524K8	SWITCH - L FIREWALL SHUTOFF	C-H	
SW3	(REF SHT 2)			
P185	(REF SHT 16)			
HP1	2380057-	ELEC HYD PUMP	PESCO	2317018
B4	AV24-611198	GATE VALVE HYD SHUTOFF (R)	GE-CO	2317015
B3	AV24-611195	GATE VALVE HYD SHUTOFF (L)	GE-CO	2317015
B2	2380078-9	VALVE FUEL SHUT OFF RH		2314021
B1	2380078-8	VALVE FUEL SHUT OFF LH		2314021
J10	840936	SOCKET RECEPT-RH	KIDDE	
J9	840936	SOCKET RECEPT-LH	KIDDE	
PSW13	2350036 / 2350078	HYD-LOW PRESS SWITCH	CENTURY	2317018
SW4	8510K12	SWITCH - HYD PUMP	C-H	
J12	2804-13T5NL	CONNECTOR		
P12	2804-14TP06			
P88	2801-17SAR			
J95	2803-41PPD	CONNECTOR		
P95	2803-41T8NR	CONNECTOR		
P84	(REF SHT 7)			
P39	(REF SHT 8)			
P186	(REF SHT 16)			
J183	(REF SHT 7)			
E2	2351024	FIRE DETECTOR SYS - R ENG		2355000
E1	2351024	FIRE DETECTOR SYS - L ENG		2355000
J184	(REF SHT 7)			
CB46	4-2-5 ... (TA)	CKT BKR	ETA	2316350
CB45				
CB44				
CB43	4-2-5A-LN2 (TA)	CKT BKR	ETA	2316350
CB79	7...-034-50	CKT BKR	MP	2316011
J185	(REF SHT 16)			
J186	(REF SHT 16)			
E2	892121-0350	CONTROL UNIT RH	KIDDE	2314023
E1	892121-0350	CONTROL UNIT LH	KIDDE	2314023
SYMBOL	PART NUMBER	NAME	VEN.	VEND. DWG

LEAR-JET

P.O. BOX 1280
WICHITA, KANSAS

	Name	Date
DRAWN	HERMAN	3-6-65
GROUP		
CHECK		
STRESS		
PROJ.		

WIRING DIAGRAM - FIRE DETECTION & HYDRAULIC IND.

DWG NO. 2308000 A

SCALE NONE 4-4-66 SHEET 6.12 OF

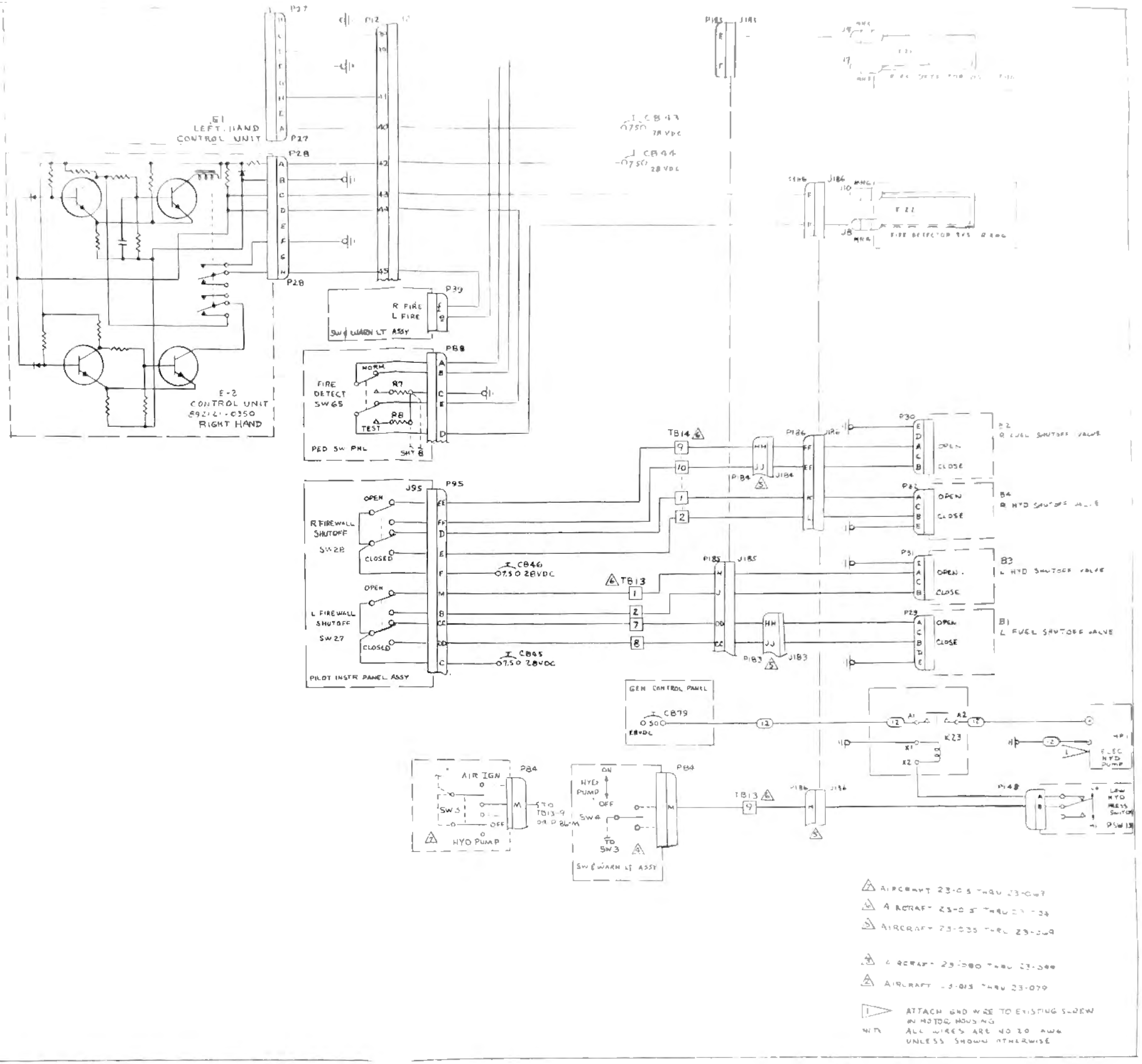

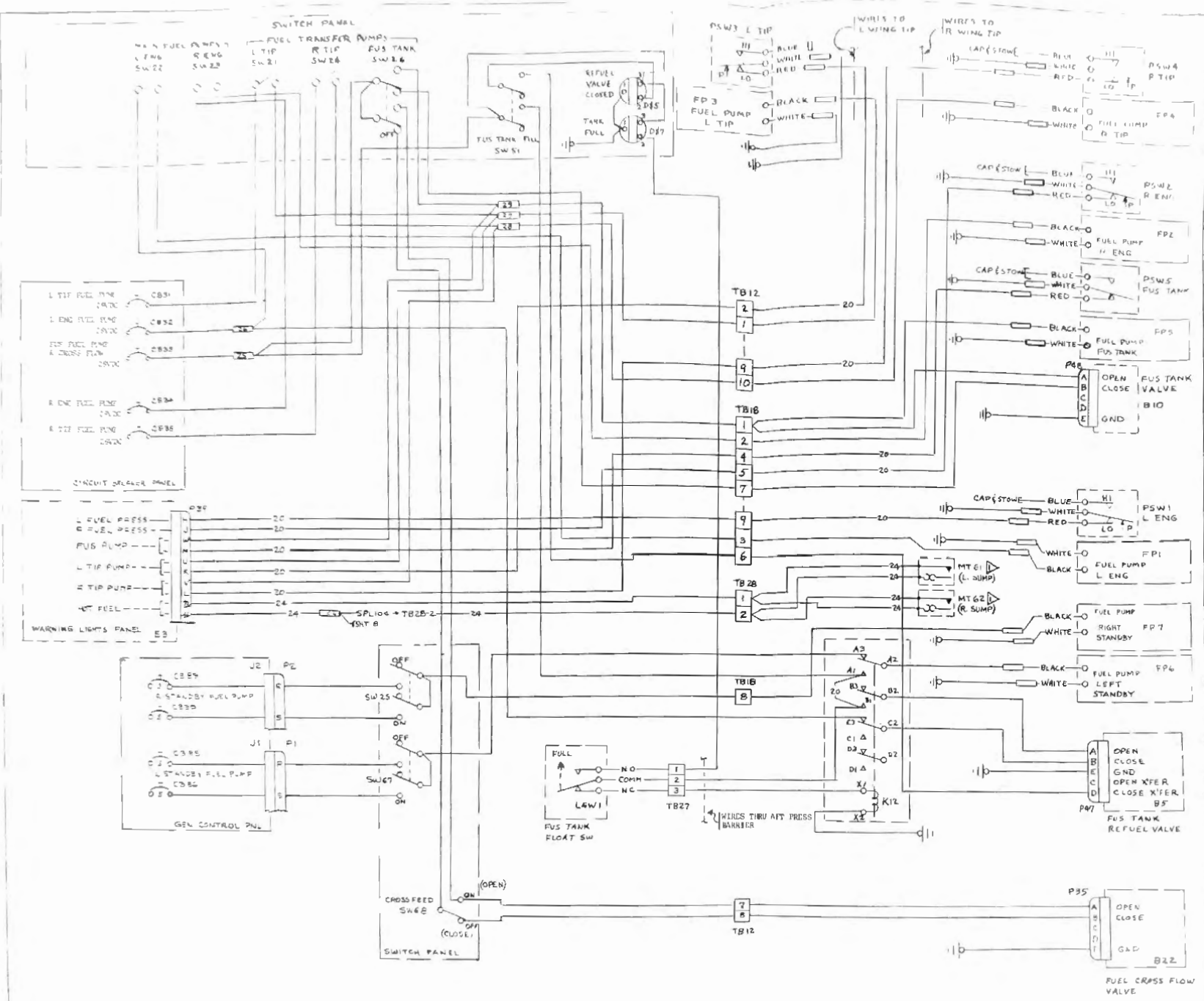

SYMBOL	PART NUMBER	NAME	VENDOR	INSTALL CHG
P7 P1 J2 J1	(SEE SHT 21)			
P48 P47	PT06SE14-5S PT06SE14-5S	PLUG PLUG	[illegible]	[illegible]
P35 P39	[illegible] (REF SHEET 8)	PLUG	[illegible]	[illegible]
DS7	PTL-481 (3-327)	INDICATE FUS TANK FULL	TEC	[illegible]
DS5	PTL-481 (3-327)	INDICATE REFUEL VALVE CLOSED	TEC	[illegible]
CB90	BC1-5	CKT BKR	BRILES	[illegible]
CB89 CB86 CB85	BC1-5 BC1-5			[illegible]
CB35 CB34 CB33 CB32 CB31	BC1-10 MS25244-10 BC1-10 MS25244-10 BC1-10	CKT BKR	BRILES BRILES BRILES	[illegible]
LSW1	GIF 5400-3	SWITCH-FLOAT FUS TANK	GORN	[illegible]
PSW5 PSW4	1G134 1G134	SWITCH-LOW PRESSURE FUS SWITCH-LOW PRESSURE R TIP	CU-CO CU-CO	[illegible]
PSW3 PSW2 PSW1	1G134 1G134 1G134	SWITCH-LOW PRESSURE L TIP SWITCH-LOW PRESSURE R ENG SWITCH-LOW PRESSURE L ENG	CU-CO CU-CO CU-CO	[illegible]
SW51 SW26	8824X8 8824X8	SWITCH-FUS TANK FILL SWITCH FUS TANK FUEL TRANSFER PUMP	C-H C-H	[illegible]
SW25 SW24 SW23 SW22 SW21	8858X45 8801X13 8857X44 8857X44 8801X13	SWITCH STANDBY FUEL PUMP - R LOT SWITCH R TANK FUEL TRANSFER PUMP SWITCH R ENG MAIN FUEL PUMP SWITCH L ENG MAIN FUEL PUMP SWITCH L TANK FUEL TRANSFER PUMP	C-H C-H C-H C-H C-H	[illegible]
SW67 SW68 MT62 MT61 K12	8858X45 8810K12 21547 21547 5-402-1	SWITCH - LEFT STANDBY FUEL PUMP SWITCH - FUEL CROSS FLOW VALVE THERMAL SW - R SUMP THERMAL SW - L SUMP RELAY - REFUEL	C-H C-H KLIXON KLIXON	[illegible]
B22 B-10 B-5	AV24B11198 AV24B11198 AV24B11198	VALVE - FUEL CROSS FLOW VALVE - FUS TANK VALVE - REFUEL	GE-CO GE-CO GE-CO	[illegible]
E-3	(SEE SHEET 5)	WARNING LIGHTS PANEL		
FP7 FP6	S2445	FUEL PUMP - RIGHT STANDBY LEFT STANDBY	[illegible]	[illegible]
FP5 FP4 FP3 FP2 FP1	S2445	- FUS TANK - R. TIP - L. TIP - R. ENG FUEL PUMP - L. ENG	STLR HYD	[illegible]

LEAR-JET

P. O. BOX 1280 WICHITA, KANSAS

	NAME	DATE
DRAWN	HERMAN	3-27-63
GROUP	O'HEIM	4-9-63
CHECK	[illegible]	7-17-63
STRESS		
PROJ		

TITLE: WIRING DIAGRAM - FUEL CONTROL

DWG NO 2308000

SCALE NONE

SHEET 702 OF 45

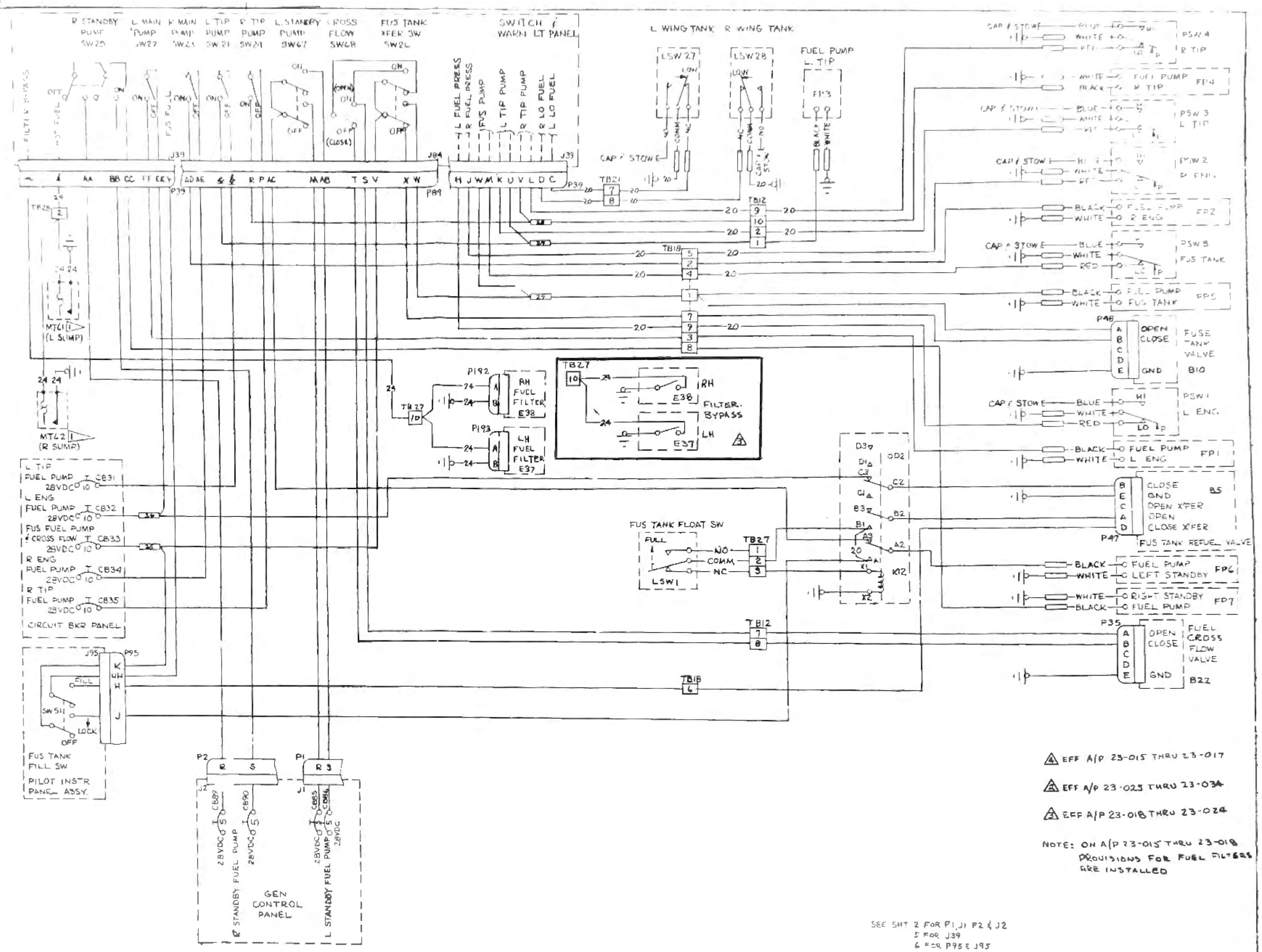

⚠4 EFF A/P 23-015 THRU 23-017

⚠3 EFF A/P 23-025 THRU 23-034

⚠2 EFF A/P 23-018 THRU 23-024

NOTE: ON A/P 23-015 THRU 23-018 PROVISIONS FOR FUEL FILTERS ARE INSTALLED

SEE SHT 2 FOR P1, J1 P2 & J2
5 FOR J39
6 FOR P95 & J95
8 FOR P39

NOTE: ALL WIRE ARE NO 16 GAUGE UNLESS OTHERWISE DESIGNATED

▷ SWITCH CLOSES AT 82°F ±3°F
SWITCH OPENS AT 73°F ±3°F

SYMBOL	PART NUMBER	NAME	VENDOR	INSTAL DWG
FP-7 FP-6	S2445		STLR	
FP5 FP4 FP3 FP2 FP1	S2445 ⚠4		STLR	
P192	MS3106 10SL-4S MS3057-4B AN3420-4A	PLUG ADAPTER SLEEVE ⚠3		PER W/D
P193	MS3106 10SL-4S MS3057-4B AN3420-4A	PLUG ADAPTER SLEEVE		PER W/D
P4 P4 P46 P47	SEE SHT 2 SEE SHT 2 [illegible] [illegible]	 PLUG PLUG	 SCIN SCIN	 PER W/D PER W/D
P35	[illegible] -5S	PLUG	SCIN	PER W/D
E38 E37 E38 E37 CB90	R9W965 ⚠3 R9W965 101194 ⚠2 101194 700-036-5	FUEL FILTER ASSY FUEL FILTER ASSY FUEL FILTER ASSY FUEL FILTER ASSY CKT BKR	AIR-MAZE AIR-MAZE DYN FILTER DYN FILTER M-F	 2316003 23 6003 2318010
CB89 CB86 CB85	700-036-5 700-036-5 700-036-5		M-F	2318010
CB35 CB34 CB33 CB32 CB31	4-2-S14-LN2-(10A) MS25244-10 41-2-S14-LN2-(10A) MS25244-10 41-2-S14-LN2-(10A)	CKT BKR	ETA — ETA — ETA	2318350 2318350
LSW 28 LSW 27 LSW 1 PSW 5 PSW 4	GIF-5400-3 GIF-5400-3 GIF-5400-3 16134 16134	SWITCH-FLOAT-R WING SWITCH-FLOAT-L WING SWITCH-FLOAT-FUS TANK SWITCH-LOW PRESSURE-FUS SWITCH-LOW PRESSURE-R TIP	GORN GORN GORN CU-CO CU-CO	2326010 2326010 2316003 2326003 2323046
PSW 3 PSW 2 PSW 1 SW51 SW26	16134 16134 16134 8BS5-45 8B24K8	SWITCH-LOW PRESSURE-L TIP SWITCH-LOW PRESSURE-R ENG SWITCH-LOW PRESSURE-L ENG SWITCH-FUS TANK FILL SWITCH-FUS TANK FUEL TRANSFER PUMP	CU-CO CU-CO CU-CO C-H C-H	2323046 2352003 2352003 2314091 2318360
SW25 SW24 SW23 SW22 SW21	8B24K8 8B10K12 8B10K12 8B10K12 8B10K12	SWITCH-STANDBY FUEL PUMP-RIGHT SWITCH-R TIP TANK FUEL TRANSFER PUMP SWITCH-R ENG MAIN FUEL PUMP SWITCH-L ENG MAIN FUEL PUMP SWITCH-L TIP TANK FUEL TRANSFER PUMP	C-H C-H C-H C-H C-H	 2318360
SW67 SW68 MT62 MT61 K12	8B24K8 MST-350 21547 21547 S-402-1	SWITCH-LEFT STANDBY FUEL PUMP SWITCH-FUEL CROSS FLOW VALVE THERMAL SW-R SUMP THERMAL SW-L SUMP RELAY-REFUEL	C-H C-H KLIXON KLIXON —	2318360 2318360 2326003 2326003 2345000
B22 B10 B5	AV24B1119B AV24B1112 AV24B1182	VALVE-FUEL CROSS FLOW VALVE-FUS TANK VALVE-REFUEL	GE-CO GE-CO GE-CO	2316004 2326001 2326001
FP7 FP6	2380060-1 2380060-1	FUEL PUMP-RIGHT STANDBY -LEFT STANDBY		2326007 2326007
FP5 FP4 FP3 FP2 FP1	S2475-1 S2475-1 S2475-1 2380060- 2380060-1	-FUS TANK -R TIP -L TIP -R ENG FUEL PUMP-L ENG	STLR HYD STLR HYD STLR HYD	2316003 2323046 2323046 2326007 2326007

LEAR-JET
P. O. BOX 1280
WICHITA, KANSAS

	NAME	DATE
DRAWN	HERMAN	3-27-63
GROUP	[illegible]	4-9-63
CHECK	[illegible]	1-17-63
STRESS		
PROJ	[illegible]	

TITLE: WIRING DIAGRAM - FUEL CONTROL

DWG NO 2308000 A

SCALE NONE | SHEET 7.05

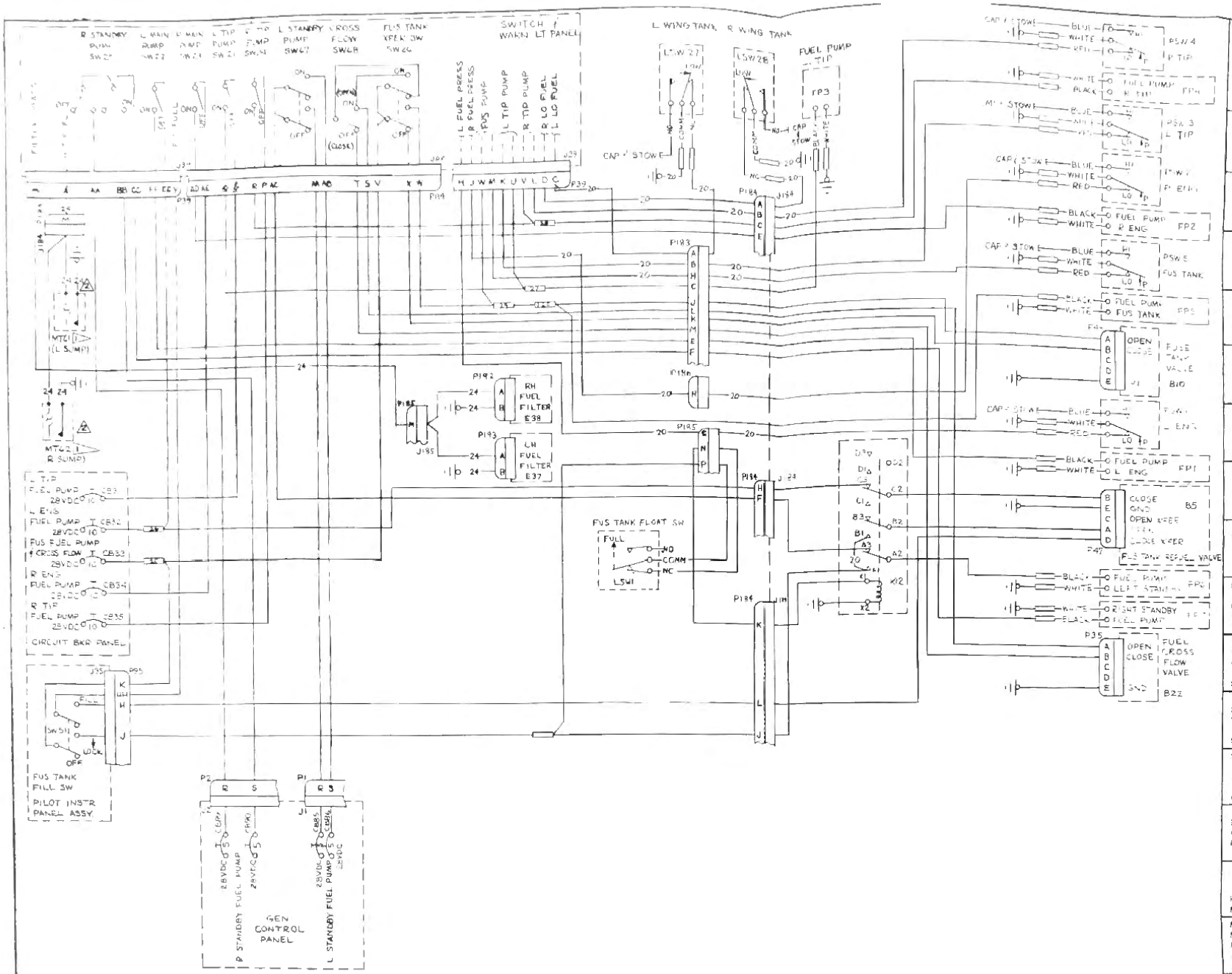

SYMBOL	PART NUMBER	NAME	VENDOR	INSTAL DWG
P183	305834-2	HOUSING	—	—
	42381-1	14 REQ SOCKETS		
	206329-1	6 REQ JACKSCREWS		
	206335-1	2 REQ #8 PINS		
	206333-1	2 REQ #12 PINS		
	201244-1	CLAMP		
	202345-2	GUARD	AMP	PER M/D
	201274-1	CLAMP		
J183	206352-1	HOUSING	—	—
	42490-1	14 REQ SOCKETS		
	206974-2	6 REQ JACKSCREWS		
	206336-1	2 REQ #8 PINS		
	206333-1	2 REQ #12 PINS		
P 924	MS3106A-16S-1S	PLUG	—	PER M/D
	MS3057-6B	ADAPTER	—	"
	AN3420-16	SLEEVE	—	"
E 924	MS3106A-16S-1S	PLUG	—	PER M/D
	MS3057-6B	ADAPTER	—	"
	AN3420-16	SLEEVE	—	"
J 84	SEE SHT 2			
P 84	SEE SHT 2			
P48	D38999/24WB35PN	PLUG	SCIN	PER M/D
P47	D38999/24WB35SN	PLUG	SCIN	PER M/D
J 24	SEE SHT 2 (P183)		SAME	PER M/D
P 24	SAME AS P183		SAME	PER M/D
P35	D38999/24WB35SN	PLUG	SCIN	PER M/D
E36	10-16	FUEL FILTER ASSY	DYN FILTER	23160003
E37	10-1194	FUEL FILTER ASSY	DYN FILTER	23160003
CB90	7CC-C36-5	CKT BKR	W-H	23 8010
CB89	7CC-C36-5		"	"
CB86	7CC-C36-5		W-H	23 8010
CB85	7CC-C32-5		"	"
CB35	2-1-C-B1A-LN2-(10A)		ETA	23 8350
CB34	MS3244-16		—	—
CB33	4-1-C-B-A-LN2-10A		LTA	
CB32	MS3244-16		—	
CB31	61-2-B14-LN2-(10A)	CKT BKR	ETA	23 8350
LSW 28	GIF-5400-3	SWITCH-FLOAT-R WING	GORN	2326003
LSW 27	GIF-5400-3	SWITCH-FLOAT-L WING	GORN	2326003
LSW 1	GIF-5400-3	SWITCH-FLOAT FUS TANK	GORN	2316003
PSW 3	16134	SWITCH-LOW PRESSURE-FUS	CU-CO	2328003
PSW 4	16134	SWITCH-LOW PRESSURE-R TIP	CU-CO	2323046
PSW 3	16134	SWITCH-LOW PRESSURE L TIP	CU-CO	2323046
PSW 2	16134	SWITCH-LOW PRESSURE-R ENG	CU-CO	2352003
PSW 1	16134	SWITCH-LOW PRESSURE-L ENG	CU-CO	2352003
SW5	EB-[illegible]45	SWITCH-FUS TANK FILL	C-H	23160 51
SW26	8824K8	SWITH-FUS TANK FUEL TRANSFER PUMP	C-H	2318320
SW25	8824K8	SWITCH STANDBY FUEL PUMP - RIGHT	C-H	
SW24	8810K12	SWITCH-R TIP TANK FUEL TRANSFER PUMP	C-H	
SW23	8810K12	SWITCH-R ENG MAIN FUEL PUMP	C-H	
SW22	8810K12	SWITCH-L ENG MAIN FUEL PUMP	C-H	
SW21	8810K12	SWITCH-L TIP TANK FUEL TRANSFER PUMP	C-H	2318320
SW67	8824K8	SWITCH-LEFT STANDBY FUEL PUMP	C-H	2318320
SW68	MS7-250	SWITCH-FUEL CROSS FLOW VALVE	C-H	2318320
MT62	2.547	THERMAL SW-R SUMP	KLIXON	2326003
MT61	2.547 ⚠2	THERMAL SW-L SUMP	KLIXON	2326003
K12	5-402-1	RELAY-REFUEL	—	2348500
B22	4V248111198	VALVE-FUEL CROSS FLOW	GE-CO	2316004
B10	4V248111198	VALVE-FUS TANK	GE-CO	2326001
B5	4V248111198	VALVE-REFUEL	GE-CO	2326001
FP7	2380060-1	FUEL PUMP - RIGHT STANDBY	—	2326007
FP6	2XM1460-1	- LEFT STANDBY	—	2326007
FP5	524781-1	- FUS TANK	STEW HYD	2316003
FP4	524781-1	- R. TIP	STEW HYD	2323046
FP3	524781-1	- L TIP	STEW HYD	2323046
FP2	2380060-1	- R. ENG	—	2326007
FP1	2380060-1	FUEL PUMP - L. ENG	—	2326007

LEAR-JET — P.O. BOX 1289 WICHITA, KANSAS

	NAME	DATE
DRAWN	HERMAN	3-27-63
GROUP	DANIM	4-9-63
CHECK	W	3-23-63
STRESS		
PROJ		V-9-63

TITLE: WIRING DIAGRAM - FUEL CONTROL

DWG NO 2308000 F

SCALE NONE — SHEET 7.06 OF

SEE SHT 2 FOR P1, J1, P2 & J2
7 FOR J184, J185, P184 & J186
6 FOR P35 & J35
5 FOR J39
8 FOR P39

⚠1 SWITCH CLOSES AT 82°F ± 3°F
SWITCH OPENS AT 75°F ± 3°F

⚠2 EFF A/P 23-035 THRU 23-039

NOTE: ALL WIRE ARE NO 16 GAUGE UNLESS OTHERWISE DESIGNATED

SYMBOL	PART NO.	NAME		REF
SW64	MS7405D	FUEL CROSS FLOW VALVE		
SW67		L STANDBY FUEL PUMP		
		FUSELAGE TANK FILL		
	8B10K12	FUS TANK FUEL XFER PUMP		
SW25	8B26K2	R STANDBY FUEL PUMP		
SW24	8B10K12	R TIP TANK FUEL XFER PUMP		
SW23		R ENG MAIN FUEL PUMP		
SW22		L ENG MAIN FUEL PUMP		
SW21	8B10K12	SWITCH L TIP TANK FUEL XFER PUMP		
P263	8F22-17SNL	PLUG		
P193	AN3420-4A	SLEEVE		
	MS3057-4B	ADAPTER		
	MS3106 10SL-4S	PLUG		
P192	AN3420-4A	SLEEVE		
	MS3057-4B	ADAPTER		
	MS3106 10SL-4S	PLUG		
P184	5802-35TSNE			
P183	5802-27TSNE			
P48	FT06SE14-5S			
P35	FT06SE14-5S	PLUG		
J263	5802-27PCE	RECEPTACLE		2318375
J186	5802-23PDL			
J183	5802-25PDL	RECEPTACLE		
CB90	700-036-5	CIRCUIT BREAKER		2318614
CB89				
CB86				
CB85	700-036-5			2318614
CB36	4-2-5/4-UNZ(10A)		ETA	
CB35			ETA	
CB34	4-2-5/4-UR(10A)		ETA	
CB33	MS25244-10			
CB32	MS25244-	CIRCUIT BREAKER		
DS56	BEP62-RB	LIGHT (RED) WITH #10 BULB		
DS55	BEP62-RB	(RED)		
DS54	BEP62-WB	(WHITE)		
DS53	BEP62-AB	(AMBER)		
DS52	BEP62-AB	(AMBER)		
DS51	BEP62-AB	(AMBER)		
K58	5402-2			
K58	5401-1	RELAY		2348000
K12	5402-1	RELAY REFUEL		
MT62	21547	THERMAL SW R SUMP		
MT61	21547	THERMAL SW L SUMP		
E38	101194	FUEL FILTER ASSY		
E37	101194	FUEL FILTER ASSY		
B22		VALVE FUEL CROSS FLOW		2376016
B10		VALVE FUS TANK		2376021
LSW28	GF-5405-3	SWITCH FLOAT R WING		
LSW27	GF-5405-3	SWITCH FLOAT L WING		
LSW1	GF-5405-3	SWITCH FLOAT FUS TANK		
PSW5	1G134	SWITCH LOW PRESS FUS		
PSW4	1G134	R TIP		
PSW3	1G134	L TIP		
PSW2	1G134	R ENG		
PSW1	1G134	SWITCH LOW PRESS L ENG		
FP7	2380060-1	FUEL PUMP R STANDBY		
FP6	2380060-1	L STANDBY		
FP5	2380060-1	FUS TANK		
FP4	2380060-1	R TIP		
FP3	2380060-1	L TIP		
FP2	2380060-1	R ENG		
FP1	2380060-1	FUEL PUMP L ENG		

LEAR JET

WIRING DIAGRAM - FUEL CONTROL

2380000 F

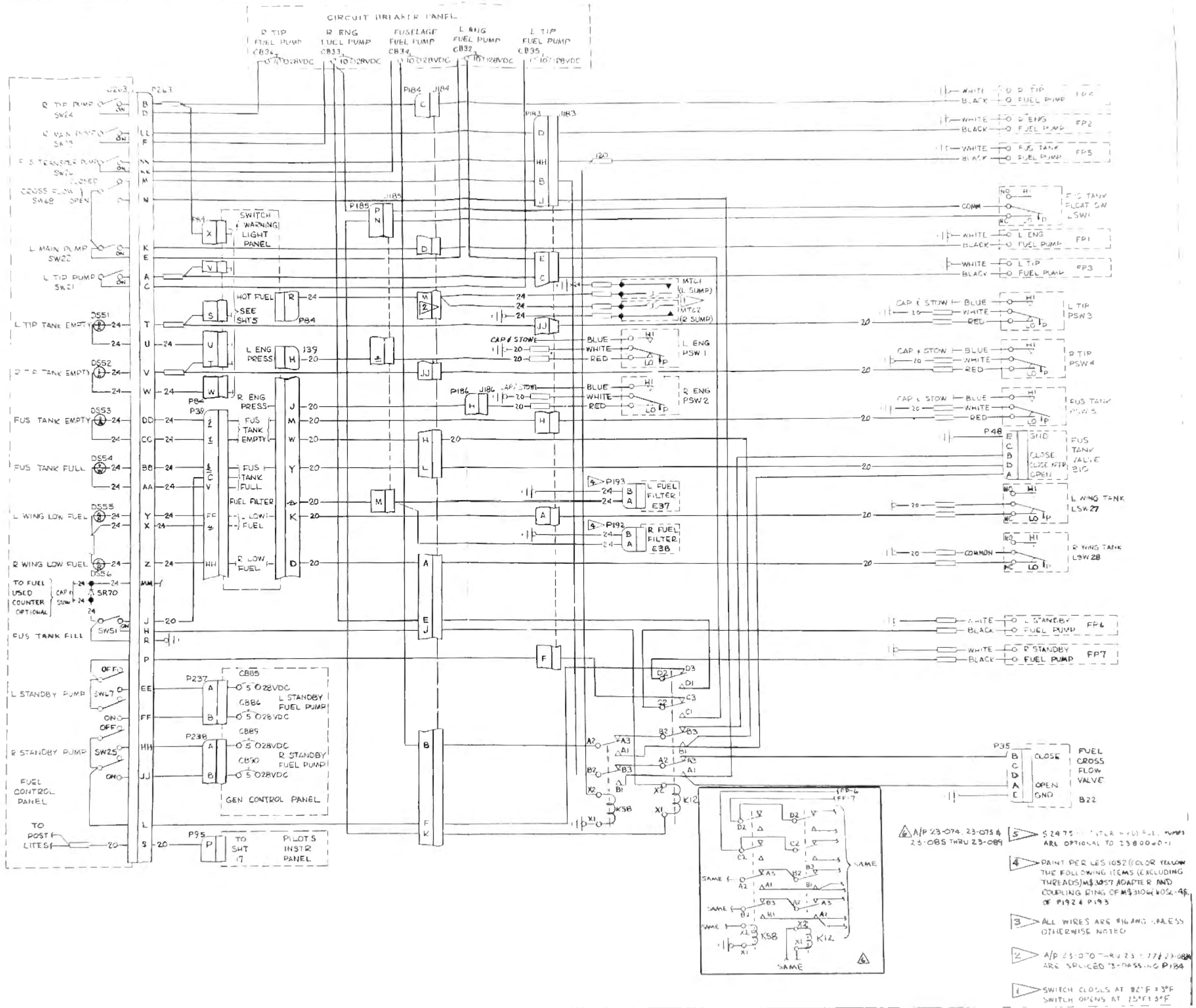

6 A/P 23-074, 23-075 & 23-085 THRU 23-089

5 S 2475 ... ARE OPTIONAL TO 2380060-1

4 PAINT PER LES 1052 (COLOR YELLOW) THE FOLLOWING ITEMS (EXCLUDING THREADS) MS3057 ADAPTER AND COUPLING RING OF MS3106 10SL-4S OF P192 & P193

3 ALL WIRES ARE #16 AWG UNLESS OTHERWISE NOTED

2 A/P 23-070 THRU 23-... ARE SPLICED BYPASSING P184

1 SWITCH CLOSES AT 82°F ± 3°F SWITCH OPENS AT 13°F ± 3°F

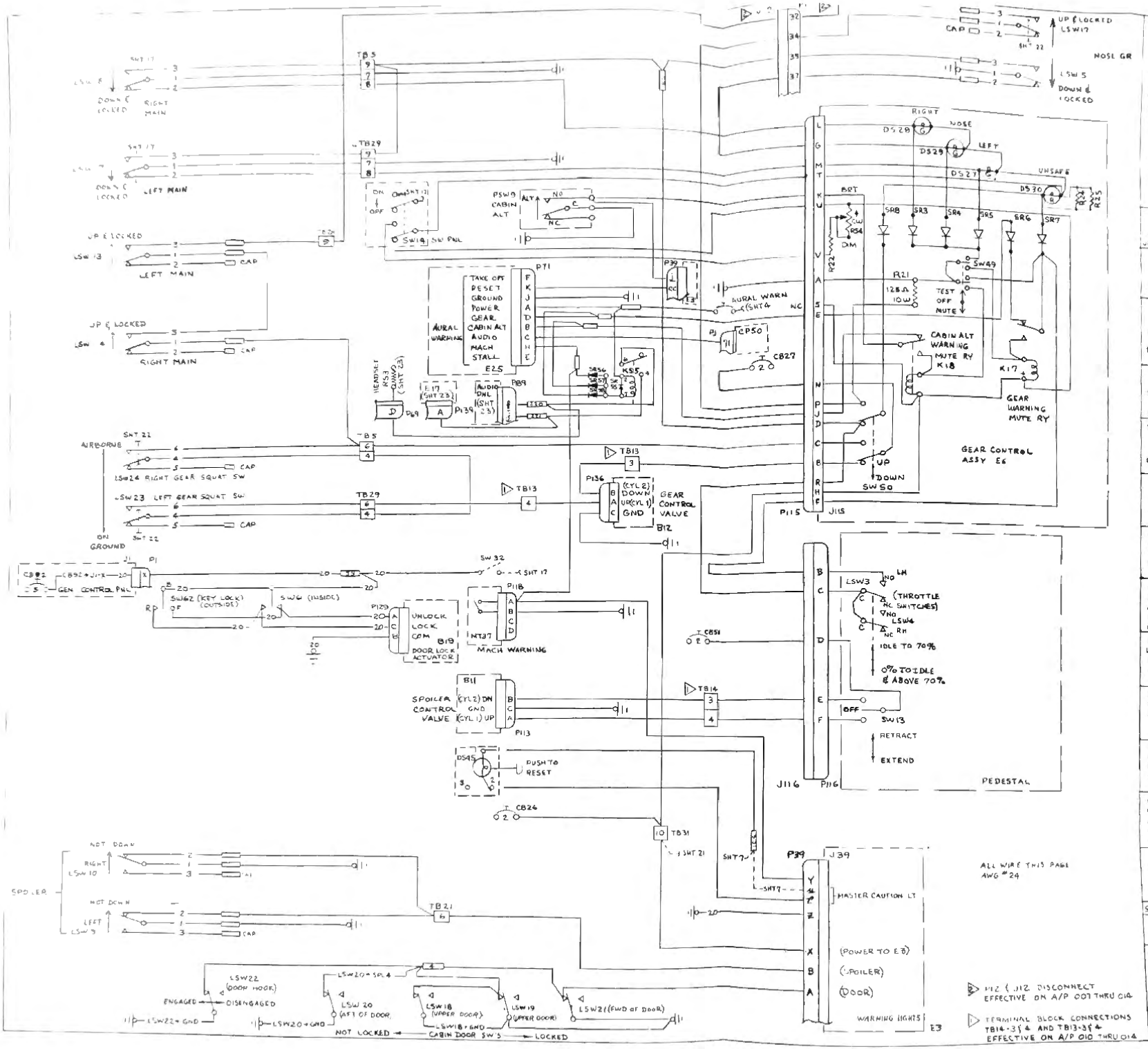

SYMBOL	PART NUMBER	NAME	VENDOR	INSTL DWG
SR8	IN2069	DIODE		2308107
SR7				
SR6				
SR5				
SR4				
SR3	IN2069	DIODE		
DS30	RDL-A1 (F12-327)	LIGHT - RED	TEC	
DS28	RDL A1 (F12-327)	LIGHT - GREEN		
DS24	RDL A1 (F12-327)	LIGHT - GREEN	TEC	
DS27	RDL-A1 (F12-327)	LIGHT - GREEN	P&B	
K17	KHP17D11-24V	RELAY	P&B	
K18	KHP17D11-24V	RELAY	OHM	
R21	P114	RESISTOR	ALCO	
SW49	M87-2058	SWITCH	CH	
SW50	8858K-44	SWITCH	SCIN	
J115	PT02E14-9P	RECPT	OHM	
R24	0116-MODEL E	POT 350Ω	OHM	
R25	680Ω 2W	RESISTOR	OHM	
R24	680Ω 2W			
R22	150Ω 2W	RESISTOR	OHM	2308103
E6	2308103	GEAR CONTROL BOX (PART OF E-3)	—	23405D
J39	200277-2 (REF)		AMP	
J12 & P12	(SEE SHT 6)			
				PER W/D
P39	8803-9TSNR	PLUG		
PJ	(SEE SHT 23)			
P71	26-222	PLUG	AMPH	
	AN3420-6A	BUSHING		
P136	MS3106()10S-3S	PLUG		
	MS3057-9B	ADAPTER		
	AN3420-4A	BUSHING		
	AN3420-6A	BUSHING		
P118	MS3106()14S-2S	PLUG		
	MS3057-6B	ADAPTER		
P115	PT06E-4-19S	PLUG	SCIN	
P113	MS3106()10SL-3S	PLUG		
	MS3057-4B	ADAPTER		
	AN3420-6A	BUSHING		
P29	MS3101A10SL3P	CONNECTOR		
	MS3057-4B	ADAPTER		
	AN3420-9A	BUSHING		
P116	126-220	PLUG	AMPH	PER W/D
SW66	8812K13	LOCK SW (INSIDE)	C-H	2311215
SW62	9553B	KEY LOCK SW (OUTSIDE)	COLE HERSEE	2311215
J116	126-221	RECEPT	AMPH	PER W/D
MP37	DRA76C-4	MACH WARNING SW	P-SENS	2314058
SW14	(REF SHT 17)			
SW13	8868K4	SPOILER SW	C-H	2315131
PSW9	GB-300-NA-B7	CABIN ALTITUDE WARNING SW	AIRCO	2314058
LSW22	8411-K7	DOOR HOOK SWITCH	C-H	2311275
LSW24	21CH9-6	SQUAT SW- RIGHT GEAR	MICRO	2348010
LSW23	21CH9-6	SQUAT SW- LEFT GEAR	MICRO	2348010
LSW21	8ER31 & MC27118	CABIN DOOR LOCK IND SW	MICRO	2311280
LSW20	8ER31 & MC27118		MICRO	2311280
LSW19	8411-K7	CABIN DOOR LOCK IND SW	C-H	2311570
LSW18	8411-K7		C-H	2311515
LSW17	1CH1-6	NOSE	MICRO	2317023
LSW16		RIGHT GEAR UP SW		12023-715
LSW15		LEFT		12023-715
LSW10		RIGHT SPOILER SW		2332516
LSW9		LEFT		2311516
LSW8		RIGHT GEAR DOWN SW		2341000
LSW7	1CH1-6	LEFT		2341000
LSW6	15M1 & J55	THROTTLE SW		2315131
LSW5	1CH1-6	NOSE GEAR DOWN		2317033
LSW4	15M1 & J55	THROTTLE SW'S- GEAR WARNING	MICRO	2315131
LSW3	15M1 & J55			2315131
DS45	30755-8-50B	LOW MASTER CAUTION	GRIMES	2314050
E3	(SEE SHT 9)	WARNING LIGHT ASSY		
CP50	SEE SHT 9	RADIO CONTROL PANEL		2314050
CB92	8C1-5	CKT BKR	BRILES	2318010
CB51	8C1-2	CKT BKR	BRILES	2318350
CB27	8C1-2	CKT BKR	BRILES	2318350
CB26	8C1-2	CKT BKR	BRILES	2318350
E25	8-1000	AURAL WARNING UNIT	LEAR	2318080
B19	2380053-1	DOOR LOCK ACTUATOR	—	2311305
B12	2380022	GEAR CONTROL VALVE	—	2317017
B11	7U7254-60	SPOILER CONTROL VALVE	RONSON	2317017

LEAR-JET

WIRING DIAGRAM - GEAR MONITOR SPEED BRAKE & AURAL WARNING

2308000 A

SHT 8.02

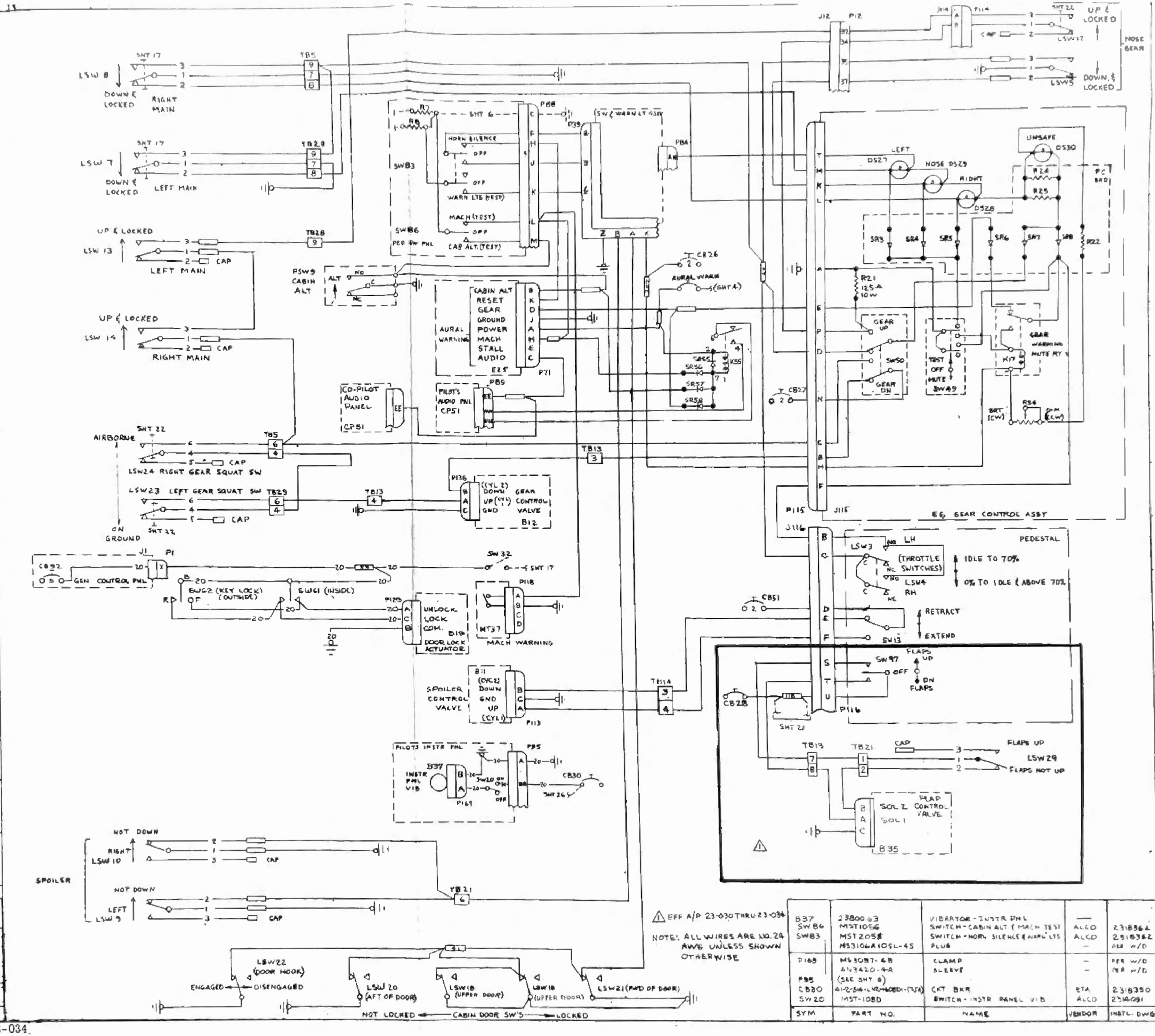

△ EFF A/P 23-030 THRU 23-034

NOTE: ALL WIRES ARE NO. 24 AWG UNLESS SHOWN OTHERWISE

SYM	PART NO.	NAME	VENDOR	INSTL. DWG
B37	2380063	VIBRATOR - INSTR PNL	—	
SW86	MST1056	SWITCH - CABIN ALT & MACH TEST	ALCO	2318362
SW83	MST205$	SWITCH - HORN SILENCE & WARN LTS	ALCO	2318362
	MS3106A10SL-4S	PLUG	—	PER W/D
P169	MS3057-4B	CLAMP	—	PER W/D
	AN3420-4A	SLEEVE	—	PER W/D
P95	(SEE SHT 6)			
CB30	41-2-514-LN2-408DI-(7.5A)	CKT BKR	ETA	2318350
SW20	MST-108D	SWITCH - INSTR PANEL VIB	ALCO	2314091

SYMBOL	PART NUMBER	NAME		VENDOR	INSTL DWG
R24	680 Ω 2W	RESISTOR	ALL ITEMS ARE A PART OF E6		2308113
R25	680 Ω 2W	RESISTOR			
SR8	1N2069	DIODE			
SR7					
SR6					
SR5					
SR4					
SR3	1N2069	DIODE			
DS30	REL A1 (F2-327)	LIGHT RED		T&C	
DS29	REL A1 (F2-327)	LIGHT GREEN			
DS28	REL A1 (F2-327)	LIGHT GREEN			
DS27	REL A1 (F2-327)	LIGHT GREEN		T&C	
K17	KHP-7D11-24V	RELAY		P&B	
R34	OHM-MODEL L	POT 350 Ω		OHM	
R21	F 10	RESISTOR		OHM	
SW49	MST-2055	SWITCH		ALCO	
SW50	6958A-44	SWITCH		C-H	
				AMP	
SW97	8857K40			AMP	
R22	150 Ω 2W	RESISTOR		OHM	2308113
E6	2308113	GEAR CONTROL BOX		—	2314091
J39	200277-2 (REF)	(PART OF E3)		AMP	
P114	PT00SE-10-6P	PLUG		SCIN	
J114	PT00SE-10-6S	RECT		SCIN	
B35	707254-60	VALVE - FLAP CONTROL		RONSON	W/D
P101	AN3420-4B	SLEEVE		—	
	MS3057-4B	CLAMP		—	
	MS3106( )10SL-3S	PLUG		—	
J116	$801-6FSNL	RECEPT		—	
P116	$841-5TMPR	PLUG		—	PER W/D
P71	126-222	PLUG		AMPH	PER W/D
P136	AN3420-4A	BUSHING		—	
	MS3106( )10SL-3S	PLUG			
	MS3057-4B	ADAPTER		—	
P118	AN3420-4A	BUSHING		—	
	AN3420-6A	BUSHING		—	
	MS3106( )14S-2S	PLUG		—	
	MS3057-6B	ADAPTER			
P113	MS3106( )10SL-3S	PLUG		—	
	MS3057-4B	ADAPTER		—	
	AN3420-4A	BUSHING		—	
P129	MS3101A10SL-3P	CONNECTOR		—	
	MS3057-4B	ADAPTER		—	
	AN3420-4A	BUSHING		—	PER/WD
P89	(SHT 3, 2308011)				
SWG1	6812K13	LOCK SW (INSIDE)		C-H	2311275
SWG2	35538	KEY LOCK SW (OUTSIDE)		COLE-HERSEE	2311275
LSW29	1CH1-6	SWITCH - FLAP		MICRO	
P39	$803-7TSNR	PLUG		—	W/D
P115	$801-7SNR	PLUG		—	
J115	$801-2FPD	RECEPT		—	W/D
SW13	8868K4	SPOILER SW		C-H	2315131
PSW9	GB-300-NA-87	CABIN ALTITUDE WARNING SW		[illegible]	2314058
MT37	DRA76C-4	MACH WARNING SW		P-SENS	2314088
LSW22	8411-K7	DOOR HOOK SWITCH		C-H	2311275
LSW24	21CH9-6	SQUAT SW - RIGHT GEAR		MICRO	2348010
LSW23	21CH9-6	SQUAT SW - LEFT GEAR		MICRO	2348010
LSW21	82R31 & MC27115	CABIN DOOR, LOCK IND SW		MICRO	2311280
LSW20	82R31 & MC27115	CABIN DOOR, LOCK IND SW		MICRO	2311280
LSW19	8411K7	CABIN DOOR LOCK IND SW		C-H	2311510
LSW18	8411K7	CABIN DOOR LOCK IND SW		C-H	2311510
LSW17	1CH1-6	NOSE - GEAR UP SW		MICRO	2317023
LSW14	1CH1-6	RIGHT - GEAR UP SW			
LSW13	1CH1-6	LEFT - GEAR UP SW			
LSW10	1CH1-6	RIGHT - SPOILER SW			2322516
LSW9	1CH1-6	LEFT - SPOILER SW			2322516
LSW8	1CH1-6	RIGHT - GEAR DOWN SW			2341000
LSW7	1CH1-6	LEFT - GEAR DOWN SW			2341000
LSW6	1SM1 & JS5	THROTTLE SW			2315131
LSW5	1CH1-6	NOSE GEAR DOWN			2317033
LSW4	1SM1 & JS5	THROTTLE SW'S - GEAR WARNING			2315131
LSW3	1SM1 & JS5	THROTTLE SW'S - GEAR WARNING		MICRO	2315131
P88	(SEE SHT 6)				
P84	(SEE SHT 2)				
CP51	(SEE SHT 3 2308011)	AUDIO PANEL - PILOT		—	
CB28	700-C36-5	CKT BKR		M-P	2318010
CB51	41-2-314-LN2-(2A)	CKT BKR		ETA	2318350
CB27	41-2-314-LN2-(2A)	CKT BKR		ETA	2318350
CB26	41-2-314-LN2-(2A)	CKT BKR		ETA	2318350
E34	2380063	INSTR PANEL VIBRATOR		—	2314091
E25	B-1000	AURAL WARNING UNIT		LEAR	2318080
B19	2380053-1	DOOR LOCK ACTUATOR		—	2311305
B12	2380022	GEAR CONTROL VALVE		—	2317017
B11	707254-60	SPOILER CONTROL VALVE		RONSON	2317017

LEAR-JET

P.O. BOX 1280
WICHITA, KANSAS

	NAME	DATE
DRAWN	OPHEIM	8-20-63
GROUP	OPHEIM	8-23-63
CHECK	[illegible]	7-1-65
STRESS		
PROJ	K. [illegible]	[illegible]

TITLE: WIRING DIAGRAM - GEAR MONITOR, SPEED BRAKE & AURAL WARNING

DWG NO. 2308000 A

SCALE: NONE   7-1-65   SHEET 8 OF [illegible]

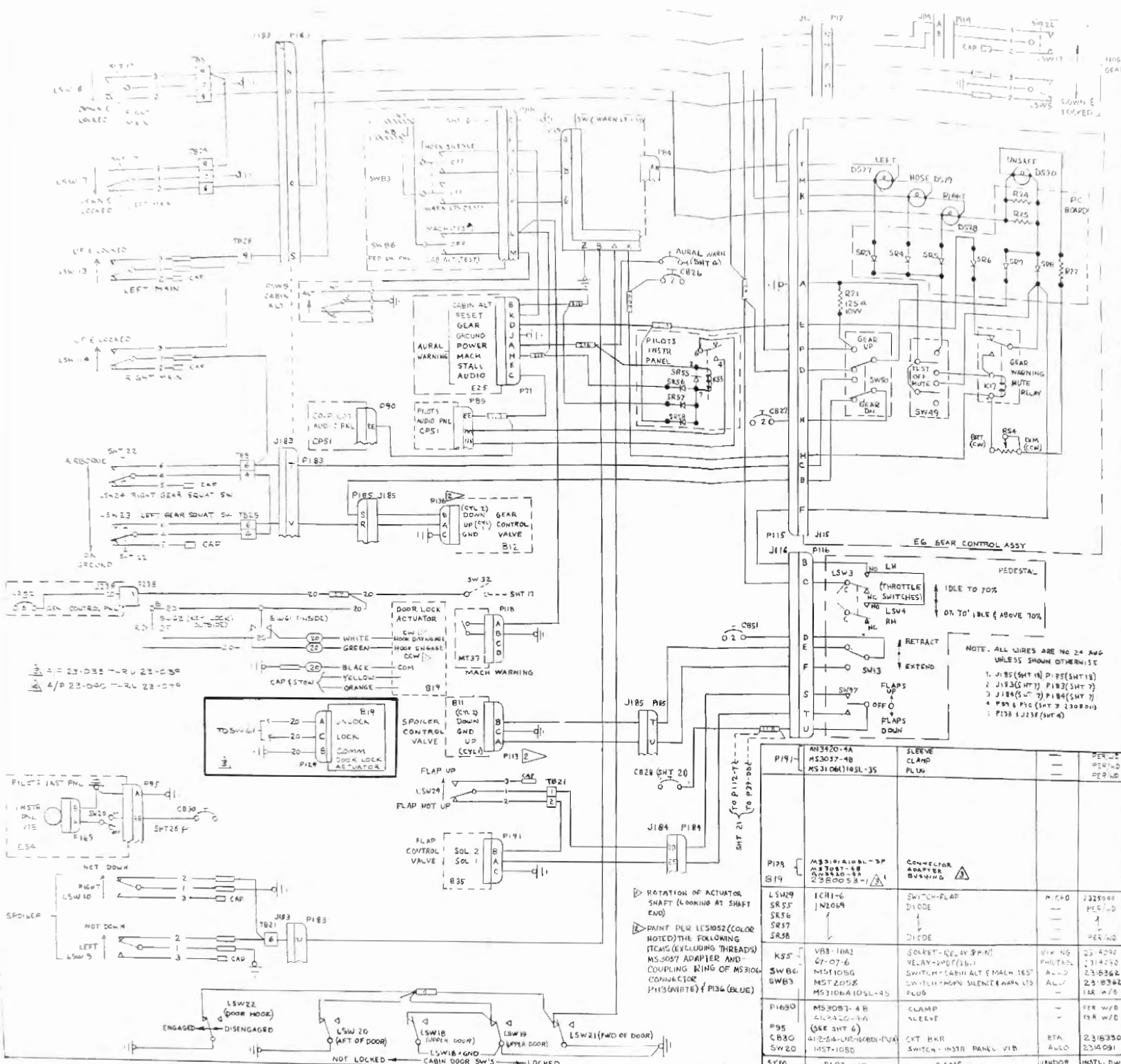

SYM	PART NO.	NAME	VENDOR	INSTL DWG
P191	AN3420-4A MS3057-4B MS3106(10SL-3S	SLEEVE CLAMP PLUG	—	PER W/D PER W/D PER W/D
P189 B19	MS3101A10SL-3P MS3057-4B AN3420-4A 2380053-1 (3)	CONNECTOR ADAPTER BUSHING (2)	—	
LSW29 SR55 SR56 SR57 SR58	1CH1-6 JN2069	SWITCH-FLAP DIODE DIODE	M-CAR — — — —	2325048 PER W/D PER W/D
K55 SW86 SW83	VAB-10A2 67-07-6 MST1015G MST2055 MS3106A10SL-4S	SOCKET-RELAY (PAN) RELAY-4PDT (28V) SWITCH-CABIN ALT & MACH TEST SWITCH-ENGN SILENCE & WARN LTS PLUG	VIK NG PHILTROL ALCO ALCO —	23-4092 2314270 2318362 2318362 PER W/D
P1680	MS3057-4B AN3420-4A (SEE SHT 6)	CLAMP SLEEVE	— —	PER W/D PER W/D
P95 CB30 SW20	412-514-LNR-1608DL-(1)A MST-1050	CKT BKR SWITCH-INSTR PANEL VIB	ETA ALCO	2318350 2314091

SYMBOL	PART NUMBER	NAME	VENDOR	INSTL DWG
SR7 SR6 SR5 SR4 SR3 DS30 DS29 DS28 DS27 R27 R24 R21 SW49 SW50	JN2069	DIODE RELAY (IF) RELAY (LE) RELAY (LE) RELAY (RE) LIGHT, UP LIGHT, DOWN LT, GREEN LT, GREEN RELAY RES, 3300Ω RESISTOR SWITCH SWITCH	— — — — — — — — — — — — — —	PER W/D PER W/D PER W/D PER W/D PER W/D PER W/D PER W/D PER W/D PER W/D PER W/D PER W/D PER W/D PER W/D PER W/D
R22 E6 J19 P19 J19	150Ω 2W 2308113 200277-2 (REF MS3106E10SL-3S MS3057-10A	RESISTOR GEAR CONTROL ASY (PART OF E1) PLUG RECT	— — — — —	2314013 2314013 PER W/D PER W/D
P71 P136	126-222 AN3420-4A MS3106E10SL-3S MS3057-4B	PLUG BUSHING PLUG ADAPTER	AMPH	PER W/D
P118 SW97	AN3423-4A AN3420-4A MS3106E10SL-3S MS3057-6A B85140	BUSHING BUSHING PLUG ADAPTER SWITCH	— — — —	
P113 J116	MS3106E10SL-3S MS3057-4B AN3420-4A 5801-6FSNL	PLUG ADAPTER BUSHING	— — —	PER W/D
B35 SW61 SW62 P116 P39	747254-60 8812K13 95538 5801-5FMR 5803-9FSNR	VALVE-FLAP CONTROL LOCK SW (INSIDE) KEY LOCK SW (OUTSIDE) PLUG PLUG	PENSTN C-H C-H	2317200 2312275 2312275
P115 J115 SW13 PSW9 MT37	5801-6FAR 5801-2F00 8862K4 GB-300-NA-67 DRA962-4	PLUG RECPT SPOILER SW CABIN ALTITUDE WARNING SW MACH WARNING SW	— AIRCO P-SENS	2315511 2314058 2314088
LSW22 LSW24 LSW23 LSW21 LSW20	8411-K7 21CH9-6 21CH9-6 BZR31 E MC2711B BZR31 E MC2711B	DOOR HOOK SWITCH SQUAT SW-RIGHT GEAR SQUAT SW-LEFT GEAR CABIN DOOR LOCK IND SW	C-H MICRO MICRO MICRO MICRO	2311278 2348010 2348010 2311280 2311280
LSW 12 LSW 11 LSW 17 LSW 14 LSW 13	8411-K7 8411-K7 1CH1-6 1CH1-6 1CH1-6	CABIN DOOR LOCK IND SW NOSE RIGHT GEAR UP SW LEFT	C-H C-H MICRO	23 510 23 510 2317023
LSW10 LSW9 LSW8 LSW7 LSW6	1CH1-6 1CH1-6 1CH1-6 1CH1-6 1SM1E355	RIGHT LEFT RIGHT LEFT THROTTLE SW	SPOILER SW GEAR DOWN SW	2317516 2317516 2341000 2341000 2315131
LSW5 LSW4 LSW3 PB8 PB4	1CH1-6 1SM1E355 1SM1E55 (SEE SHT 6) (SEE SHT 3)	NOSE GEAR DOWN THROTTLE SW'S-GEAR WARNING	MICRO	2317033 2315131 2315131
CPS1 CB32 CB31 CB27 CB26	(SEE SHT 3 2308001) 700-036-5 41-2-3-4-LN2-(2A) 41-2-3-4-LN2-(2A) 41-2-3-4-LN2-(2A)	AUDIO PANEL-PILOT CKT BKR CKT BKR CKT BKR CKT BKR	— W-P ETA ETA ETA	2318011 2318350 2318350 2318350
E34 E25 B19 B12 B11	2380069 8-1000 2380072-1 (4) 2380022 747254-60	INSTR PANEL VIBRATOR AURAL WARNING UNIT DOOR LOCK ACTUATOR GEAR CONTROL VALVE SPOILER CONTROL VALVE	— LEAR — — PENSTN	23-4091 2314080 2315305 2317017 2317317

LEAR-JET P.O. BOX 1289 WICHITA, KANSAS

	NAME	DATE
DRAWN	OPHEIM	8-20-63
GROUP	OPHEIM	8-28-63
CHECK		9-11-63
STRESS		
PROJ		

TITLE: WIRING DIAGRAM - GEAR MONITOR, SPEED BRAKE & AURAL WARNING

DWG NO 2308000 A

SCALE NONE SHEET 6 OF 12

Symbol	Part Number	Name	Mfr	Inst Dwg
J116	[illegible]	[illegible]		
E6	2308117	GEAR CONTROL BOX	—	2314091
J190	$802-4 FPCL	PLUG		PER W/D
P190	$802-3 -5NR	PLUG		
J116	$801-6 RSNL	PLUG		
P116	$801-5 FPNR	PLUG		
	AN 3420-6A	BUSHING		
P118	MS 3106 A 10SL-4S	PLUG		
	MS 3057-4B	ADAPTOR		
P115	$801-17SNR	PLUG		
J116	PT 06 SE-10-6 S	RECT		
	PT 06 SE-10-6 P	PLUG		
	AN 3420-4A	BUSHING		
P113	MS 3106 10SL-3S	PLUG		
	MS 3057-4B	ADAPTOR		
P71	126-223		AMPH	
P39	$803-9 TSNR		AMP	
LSW 33	1CH1-6	SWITCH FLAP	MICRO	2320090
SW 47	BB5T K40	SWITCH FLAP	C-H	2315130
SW 61	8B12K13	LOCK SWITCH (INSIDE)	C-H	2311275
SW 62	95536	KEY LOCK SW (OUTSIDE)	COLE HERSEE	2311275
SW 86	MST 105 6	SW-CABIN ALT & MACH TEST	ACCO	2318262
SW 83	MST-205 J	SW-HORN SILENCE & WARN LTS	ACCO	2318262
SW 20	MST-15 ED	SWITCH-INST PANEL VIB	ACCO	2318291
SW 13	BB6 K4	SPOILER SWITCH	C-H	2315131
MT37	DRA76C-6	MACH WARNING SWITCH	PIONEER	2314058
PSW 9	6B-2008 A-87	CABIN ALT WARNING SW	AIRES	2314058
LSW 34	1CH1-6	RIGHT DOOR CYL DOWN SW	MICRO	2327011
LSW 33	1CH1-6	LEFT DOOR CYL DOWN SW	MICRO	2327011
LSW 32	1CH1-6	TRUNION RIGHT GEAR UP SW	MICRO	2341000
LSW 31	1CH1-6	TRUNION LEFT GEAR UP SW	MICRO	2341000
LSW 24	2ICH9-6	SQUAT SW RIGHT GEAR	MICRO	2341000
LSW 23	2ICH9-6	SQUAT SW LEFT GEAR	MICRO	2348010
LSW 22	B941-K7	DOOR HOOK SWITCH	MICRO	2348010
LSW 21	BER31 EMC2711B	CABIN DOOR LOCK IND SW	C-H	2311280
LSW 20	BER31 EMC2711B	CABIN DOOR LOCK IND SW	MICRO	2311280
LSW 19	B941K7		C-H	2311510
LSW 18	B941K7		C-H	2311510
LSW 17	1CH1-6	NOSE GEAR UP SW	MICRO	2317023
LSW 14	1CH1-6	RIGHT GEAR UP SW		
LSW 13	1CH1-6	LEFT GEAR UP SW		
LSW 10	1CH1-6	RIGHT SPOILER SW		2322516
LSW 9	1CH1-6	LEFT SPOILER SW		2322516
LSW 8	1CH1-6	RIGHT GEAR DN SW		2341000
LSW 7	1CH1-6	LEFT GEAR DN SW		2341000
LSW 36	1CH1-6	R TRUNION DN SW		2341000
LSW 5	1CH1-6	NOSE GEAR DOWN		2317023
LSW 4	1SM1 & JS5	THROTTLE SW'S		2315131
LSW 3	1SM1 & JS5	GEAR WARNING	MICRO	2315131
CP51	SEE SHT 2 2308011	AUDIO PANEL PILOT	LEAR	
CB 92	700-036-5	CKT BKR	KLIXON	2318010
CB 51	41-2-3/4-LW2 (3A)	CKT BKR	ETA	2318350
CB 30	41-2-5/4-LW2 (7.5A)	CKT BKR	ETA	2318350
CB 27	41-2-5/4-LW2 (2A)	CKT BKR	ETA	2318350
CB 26	41-2-5/4-LW2 (2A)	CKT BKR	ETA	2318350
E34	2380063	INST PANEL VIBRATOR	LEAR	2314091
E25	B-1000	AURAL WARNING UNIT	LEAR	2318080
B42	46000020	GEAR DOOR CONTROL VALVE	WHITTAKER	2327011
B35	7U7254-60	FLAP CONTROL VALVE	RONSON	2327000
B19	2380072-1	DOOR LOCK ACTUATOR	LEAR	2311305
B12	2380082	GEAR CONTROL VALVE	LEAR	2317078
B11	7U7254-60	SPOILER CONTROL VALVE	RONSON	2317078
SYMBOL	PART NUMBER	NAME	VENDOR	INST DWG

LEAR JET

P.O. BOX 1280, WICHITA, KANSAS

	Name	Date	
DRAWN	OVIATT G.J.	11-20-65	TITLE: WIRING DIAGRAM-GEAR MONITOR, SPOILER & AURAL WARNING
GROUP	[signature]	11-2-65	
CHECK			DWG NO 2308000
STRESS			
PROJ.	[signature]	11/1/65	A
SUPERSEDES 8.10		SCALE NONE	SHEET 8.13 OF

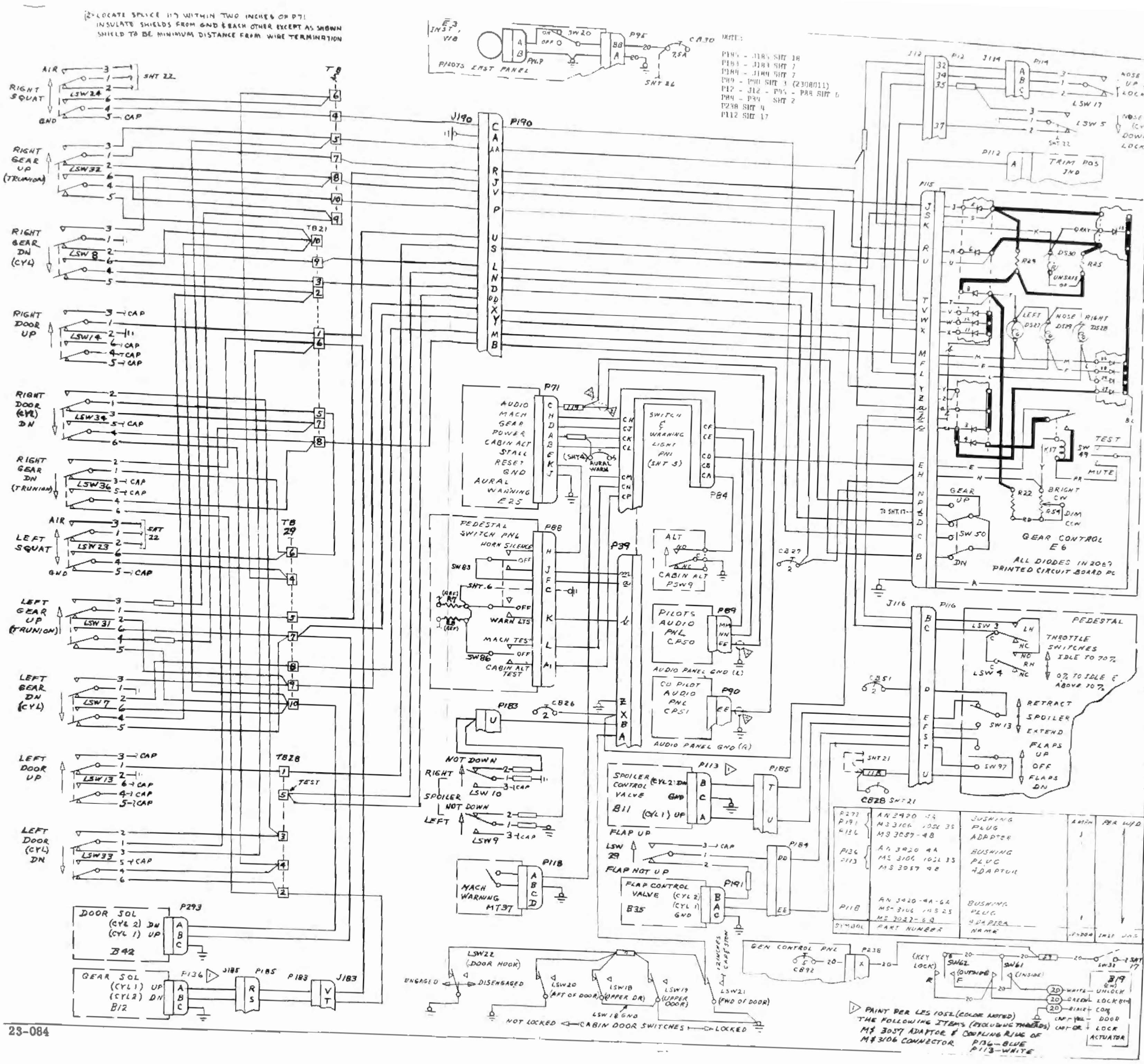

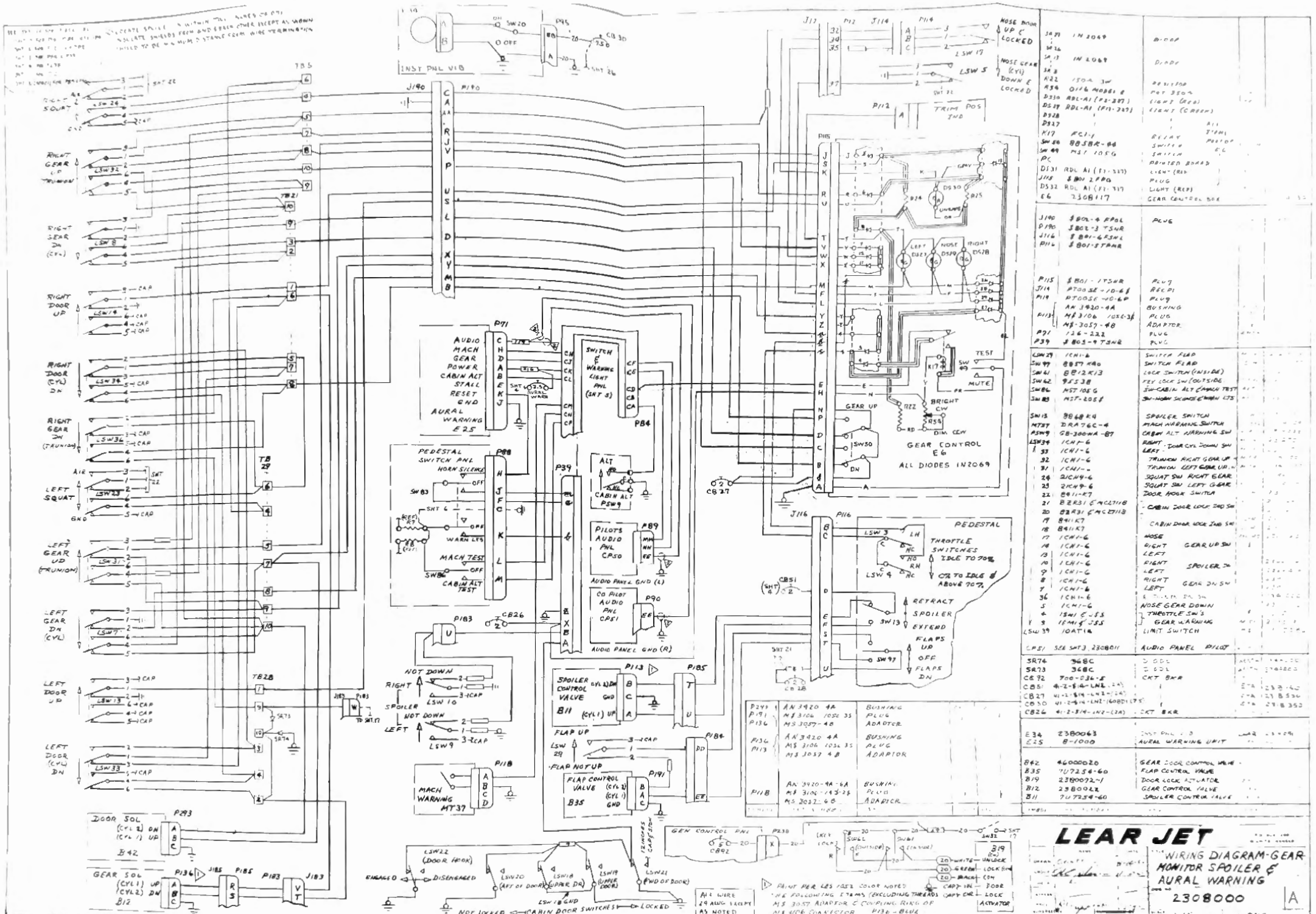
LEAR JET
WIRING DIAGRAM-GEAR MONITOR SPOILER & AURAL WARNING
2308000
A
GEAR CONTROL E6
ALL DIODES IN2069
AURAL WARNING E25
AUDIO PANEL GND (L)
AUDIO PANEL GND (R)
ALL WIRE 24 AWG UNLESS AS NOTED
NOT LOCKED ← CABIN DOOR SWITCHES → LOCKED
Changed 31 July 1969
AIRCRAFT 23-085 THRU 23-099
9-29/9-30

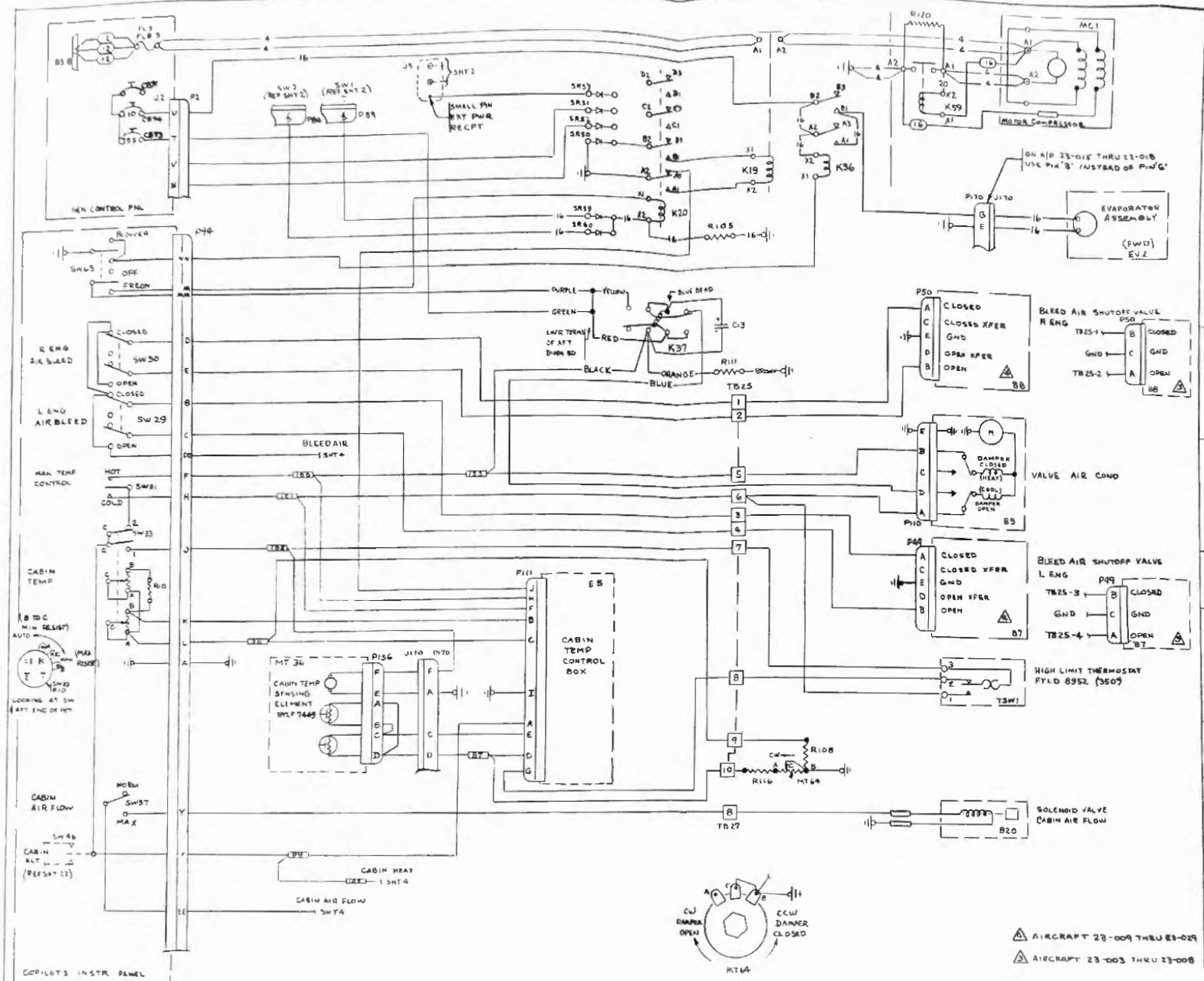

J170	MS3102A22-5S	RECPT		
	MS3057-11B	CLAMP		
	AN3420-8A & -12A	SLEEVE		
P170	MS3106A22-6P	RECPT		
	MS3057-12B	CLAMP		
	AN3420-8A & -12A	SLEEVE		
P49	MS3106E-14S-5S	PLUG		
P50	MS3106A-14S-6S	PLUG		
B7 B8 ⚠2	52-2867-001	AIR VALVE	AIR FLOW	23-19-16
P94	201389-2	JACKSCREWS (F)	AMP	PER W/D
	200836-6	SKID. SOCKETS	↓	↓
	200833-4	SKIDE PINS		
	201224-1	CLAMP		
	42981-1	SOCKETS		
	200838-2	HOUSING	AMP	PER W/D
SW30	8864KB	SWITCH R ENG AIR VALVE	C-H	23-16091
TSW1	FYLD 8952 (350°)	THERMOSTAT HIGH LIMIT	BAR-COL	23-19116
SR85	IN2069	DIODE	MOT	PER W/D
SR82	IN2069	DIODE	MOT	PER W/D
SR81	IN2069	DIODE	MOT	PER W/D
SR80	IN2069	DIODE	MOT	PER W/D
R120	Z318015-1	RESISTOR (SHUNT)	—	23-19112
SW31	8812 K13	SWITCH-CABIN TEMP-MAN	C-H	2314091
K59	5-406-1	RELAY	—	23-19112
SW29	8824KB	SWITCH-AIR VALVE L ENG	C-H	2314091
R10 SW33	2318074-1	TEMP SELECTO - CABIN WITH MAN - AUTO SWITCH		2314091
SW37	MET205M	SWITCH-CABIN AIR FLOW	ALCO	2314091
R116	200Ω 2 WATT	RESISTOR	OHM	
R111	MOR 10-200	RESISTOR	TRU-OHM	2318354
R108	390Ω 2 WATT	RESISTOR	OHM	PER W/D
K37	28-18-26	RELAY	HI-G	2318354
P156	MS3106A-16S-1S	PLUG	—	PER W/D
	MS3057-8B	CABLE CLAMP	—	
	AN3420-6A	SLEEVE	—	
P111	AN3420-10A	SLEEVE	—	
	AN3420-6A	SLEEVE	—	
	MS3057-10B	CABLE CLAMP	—	
P110	MS3106A-18-1S	PLUG	—	
	MS3106A-16S-1S	PLUG	—	
P50 P99	MS3057-8B AN3420-6A		— —	PER W/D
B8 B7 ⚠2	BYLB 8958	AIR VALVE	BAR-COL	—
S36	94R103-1	CONTROL VALVE-CABIN FLOW	JANITROL	23-19116
MT36	BYLF 7469	TEMP SENSINGELMT-CABIN	BAR-COL	23-11542
MT35	AYLF 8953	TEMP SENSINGELMT-DUCT	BAR-COL	23-19116
MC1	B6R050	MOTOR COMPRESSOR	LEAR	23-19113
K20	5402-1	RELAY-AIR COND CONTROL	LEAR	2318354
K19	5400-1	RELAY-AIR COND. PWR	LEAR	2318354
FL83	FSM 3R FSM4	LIMITER BASE	SURNDY	2318010
FL3	FLLE (150A	CURRENT LIMITER	SURNDY	2318010
MT64	PM 4971	POT. 5000Ω (C TAPER)	CTS	23-19188
E5	CYLZ 8950	CONTROL BOX-CABIN TEMP	BAR COL	23-14023
EV2	6600056-3	EVAPORATOR ASSEMBLY (FWD)	LEAR	2319056
K36	5401-1	RELAY	—	2318354
CB93	700-036-705	CIRCUIT BREAKER	M/P	2318004
CB96	700-036-10	CIRCUIT BREAKER	M/P	23-8010
C13	150D476X0035B2	CAPACITOR (47 μF 35V)	SPRAGUE	PER W/D
SW63	MST-205P	SWITCH	ALCO	2314091
R105	R410 (400Ω 40W)	RESISTOR	OHM	2318354
B20	2380058-1	SOLENOID VALVE CABIN AIR FLOW	—	23-19167
B5B B9	(SEE SHT 2) 23-19188-1	VALVE-AIR COND	LEAR	23-19116
SR60	IN2069	DIODE		PER W/D
SR59	IN2069	DIODE		PER W/D
SYMBOL	PART NUMBER	NAME	VENDOR	INSTAL DWG

⚠1 AIRCRAFT 23-009 THRU 23-029

⚠2 AIRCRAFT 23-003 THRU 23-008

NOTE: 1. ALL WIRES NO. 20 UNLESS SHOWN OTHERWISE.

2. ON A/C 23-003 THRU 23-016 OMIT CONNECTIONS TO PLUG P39, P84, P170, & P96.

LEAR-JET

P. O. BOX 1286 WICHITA, KANSAS

WIRING DIAGRAM - HEATING & VENT

2308000

SHEET 15.10 OF

	201389-1 42981-1 (26 REQD)	HOUSING SOCKETS	AMP	PER W/D
P189	201388-2 201389-2 201229-1 200512-2 42980-1 (26 REQD)	JACKSCREW JACKSCREW CLAMP HOUSING PINS		
J189	200875-2 200876-2 201229-1 201188-2 201389-2	JACKSCREW JACKSCREW CLAMP PIN GUARD JACKSCREWS (2)	AMP	PER W/D
P96	200835-4 200833-4 201224-1 42981-1 200536-2	GUIDE SOCKETS GUIDE PINS CLAMP SOCKETS HOUSING	AMP	PER W/D
TSW1	P/N D8952 (350°)	THERMOSTAT HIGH LIMIT	BAR-COL	2319116
SR53	IN2069	DIODE	MOT	PER W/D
SR52	IN2069	DIODE	MOT	PER W/D
SR51	IN2069	DIODE	MOT	PER W/D
SR50	IN2069	DIODE	MOT	PER W/D
R120	Z31B015-1	RESISTOR (SHUNT)	—	2319112
SW31	8812 K13	SWITCH - CABIN TEMP - MAN	C-H	2314091
K59	5-406-1	RELAY	—	2319112
SW29	8824-K8	SWITCH - AIR VALVE CONT	C-H	2314091
R10 SW33	2318074-1	TEMP SELECTOR - CABIN WITH MAN - AUTO SWITCH	-	2314091
SW87	MBT205N	SWITCH - CABIN AIR FLOW	ALCO	2314091
R116	200Ω 2 WATT	RESISTOR	OHM	
R111	MOR10-200	RESISTOR	TRU-OHM	2318354
R108	390Ω 2 WATT	RESISTOR	OHM	PER W/D
K37	28-18-126	RELAY	HI-G	2318354
P156	MS3106A-16S-1S	PLUG	—	PER W/D
	MS3057-8B	CABLE CLAMP	—	
	AN3420-6A	SLEEVE	—	
	AN3420-10A	SLEEVE	—	
	AN3420-6A	SLEEVE	—	
	MS3057-10B	CABLE CLAMP	—	
P110	MS3106A-18-1S	PLUG	—	
	MS3106()16S-1S	PLUG	—	
	MS3057-8B AN3420-6A		-	PER W/D
B36	948103-1	CONTROL VALVE - CABIN FLOW	JANITROL	2319116
MT36	BYLF 7469	TEMP SENSING ELMT - CABIN	BAR-COL	2311642
MT35	AYLF 8953	TEMP SENSING ELMT - DUCT	BAR-COL	2319116
MC1	B6R080	MOTOR COMPRESSOR	LEAR	2319113
K20	5402-1	RELAY - AIR COND CONTROL	LEAR	2318354
K19	5400-1	RELAY - AIR COND PWR	LEAR	2318354
FLB3	FSH OR FSH-4	LIMITER BASE	BURNDY	2-1601C
FL3	FLLE (150A)	CURRENT LIMITER	BURNDY	2318010
MT64	PM6971	POT 500Ω (C TAPER)	CTS	2319188
E5	CYLZ 8950	CONTROL BOX - CABIN TEMP	BAR-COL	2314023
EV2	6600056-3	EVAPORATOR ASSEMBLY (FWD)	LEAR	2319066
K36	5401-1	RELAY	—	2318354
CB93	700-036-705	CIRCUIT BREAKER	M/P	2318010
CB94	700-036-10	CIRCUIT BREAKER	M/P	2318010
C13	150D476X0035B2	CAPACITOR (47μF 35V)	SPRAGUE	PER W/D
SW63	MST-205P	SWITCH	ALCO	2314091
R105	F410 (400Ω 40W)	RESISTOR	OHM	2318354
B20	2380058-1	SOLENOID VALVE - CABIN AIR FLOW	-	2319167
B18	(SEE SHT 2)			
B9	2319188-1	VALVE - AIR COND	LEAR	2319116
SR60	IN2069	DIODE		PER W/D
SR59	IN2069	DIODE		PER W/D
SYMBOL	PART NUMBER	NAME	VENDOR	INSTAL DWG

LEAR-JET P.O. BOX 1289 WICHITA, KANSAS

	NAME	DATE
DRAWN	HERMAN	4-25-68
GROUP	[illegible]	4-29-68
CHECK	[illegible]	4-30-68
STRESS		
PROJ	[illegible]	5-1-68

TITLE: WIRING DIAGRAM - HEATING & VENT

DWG NO 2308000 A

SCALE NONE SHEET 15 11

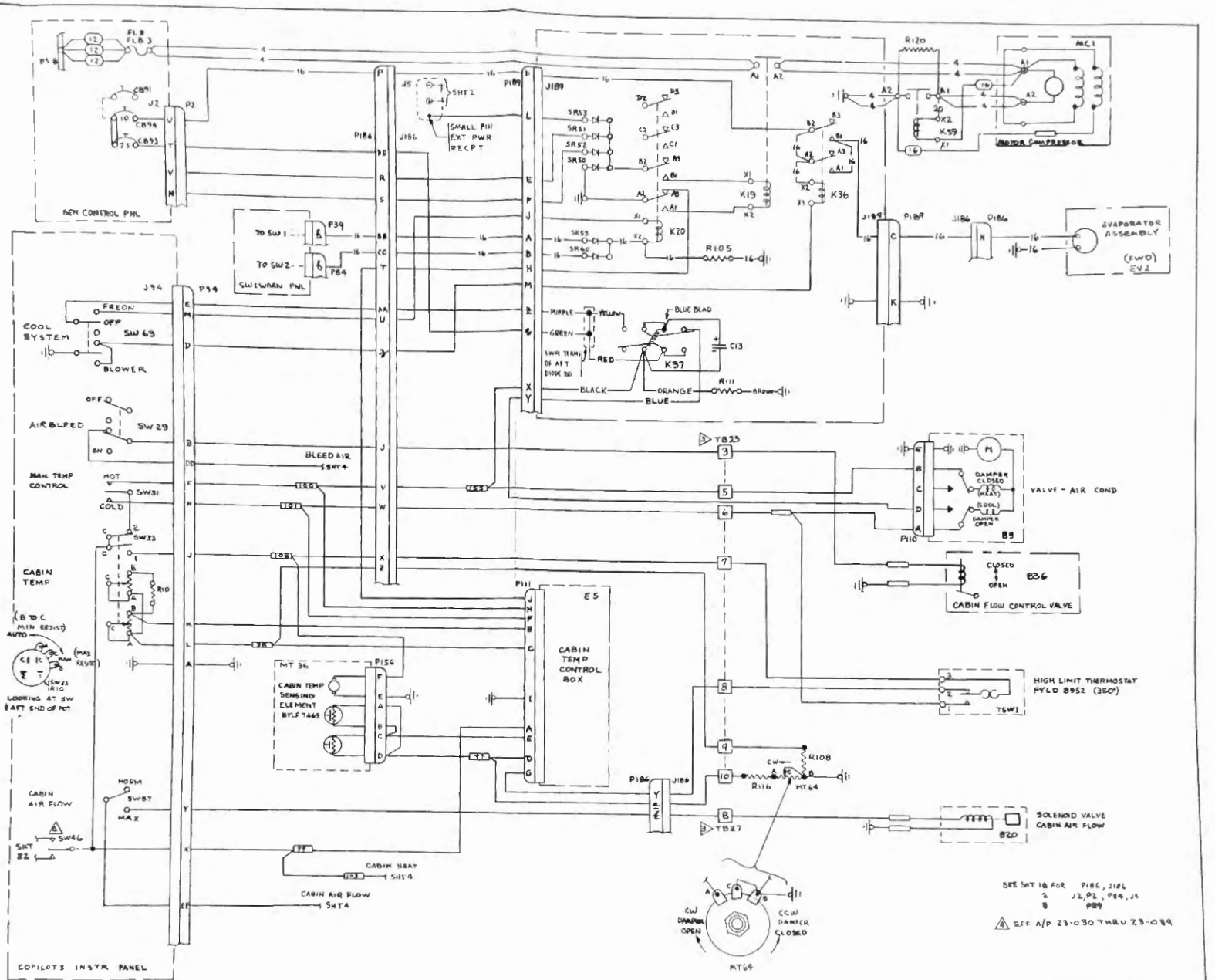

SEE SHT 18 FOR P18C, J18C
2 J2, P2, P84, J4
8 P89

△4 EFF A/P 23-030 THRU 23-089

NOTE: 1. ALL WIRES NO 20 UNLESS SHOWN OTHERWISE.

2. ON A/C 23-030 THRU 23-034 OMIT CONNECTIONS TO PLUG P189 & P186.

△3 TB 25 & 27 CONNECTIONS EFF 23-030 THRU 23-034.

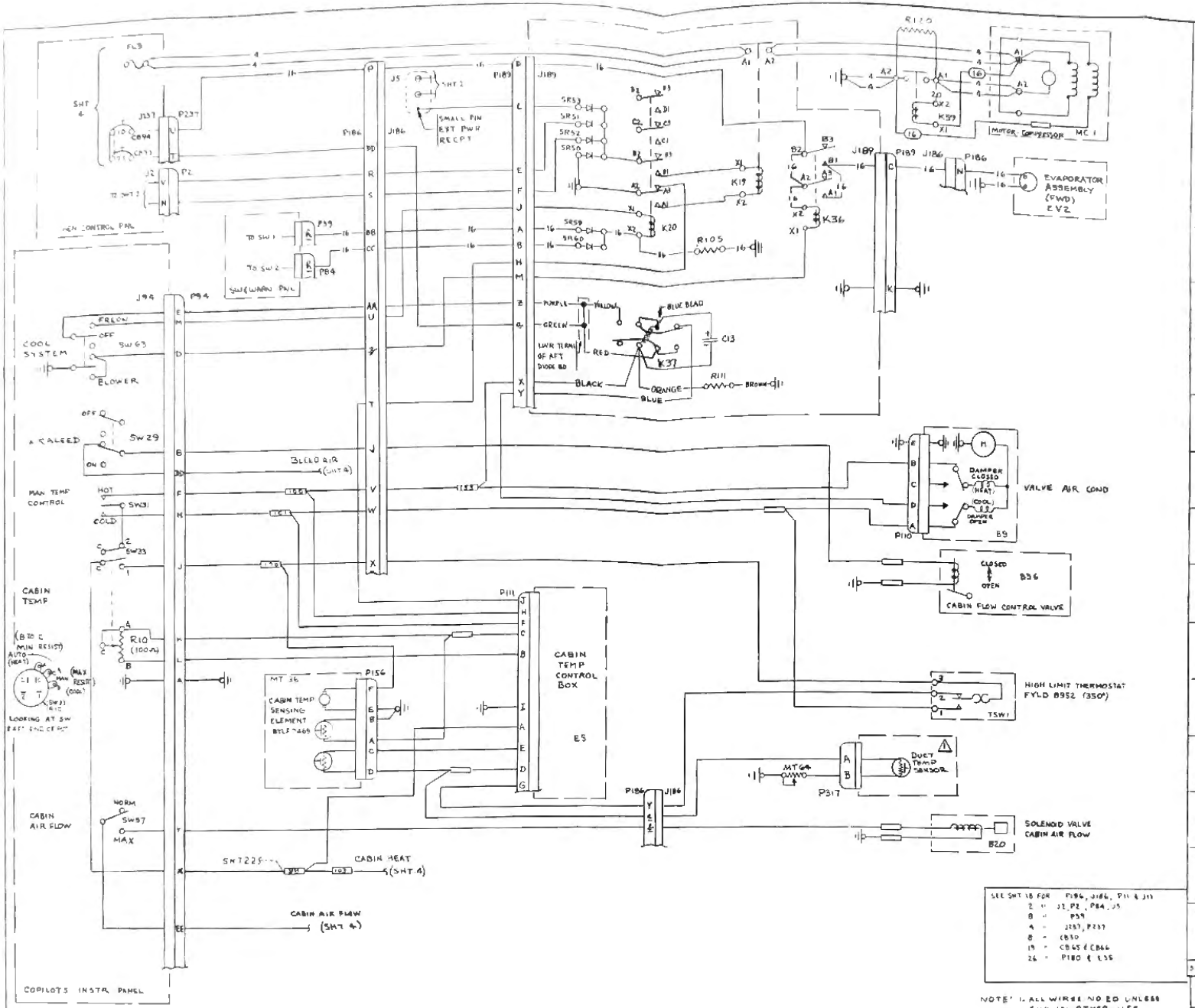

SYMBOL	PART NUMBER	NAME	VENDOR	INSTAL DWG
K59	#-906-1	RELAY		2319112
J189	#801-6FPML	RECPT		PER W/D
J94	#802-33FPC	RECPT		
P94	#802-34TSNL	PLUG		
P189	#801-5TSNR	PLUG		PER W/D
R120	Z318015-1	RESISTOR (SHUNT)	-	2319112
TSW1	FYLD 8952 (350°)	THERMOSTAT HIGH LIMIT	BAR-COL	2319116
SR53	IN2069	DIODE	MOT	PER W/D
SR52	IN2069	DIODE	MOT	PER W/D
SR51	IN2069	DIODE	MOT	PER W/D
SR50	IN2069	DIODE	MOT	PER W/D
SW31	BB12 K13	SWITCH-CABIN TEMP-MAN	C-H	2314091
SW29	BB24 K8	SWITCH-AIR VALVE-L ENG	C-H	2314091
R10 SW33	2318074-1	TEMP SELECTOR-CABIN WITH MAN-AUTO SWITCH	-	2314091
SW57	MST205N	SWITCH-CABIN AIR FLOW	ALCO	2314081
SW63	MST205P	SWITCH-COOL SYS	ALCO	2314691
R111	MOR 10-200	RESISTOR	TEL-OHM	2318334
K37	390 Ω (2 WATT) 28-18-126	RESISTOR RELAY	OHM MIT-6	PER W/D 2318354
P156	MS3106A-16S-1S	PLUG	-	PER W/D
	MS3057-8B	CABLE CLAMP	-	
	AN3420-6A	SLEEVE	-	
P110	M83106()16S1S	PLUG	-	
	MS3057-8B AN3420-6A		-	PER W/D
P317	M83016A-18-1S	PLUG		
B36	94R103-1	CONTROL VALVE-CABIN FLOW	HONEYWELL	2318542
MT36 ⚠	BYLF 7469 MS28034-1	TEMP SENSING ELEMENT-CABIN DUCT TEMP SENSOR	BAR-COL	
MC1	B6R080	MOTOR COMPRESSOR	LEAR	2318113
K20	3402-1	RELAY-AIR COND CONTROL	LEAR	23 6356
K19	3400-1	RELAY-AIR COND PWR	LEAR	2318354
FL3	FLLE (15A)	CURRENT LIMITER	BURNDY	2318013
MT64	WW 201	POTENTIOMETER	CENTRALAB	2319188
EV2	6600054-3	EVAPORATOR ASSEMBLY	LEAR	2319064
K36	3401-1	RELAY	—	2318354
CB93	7M0-036-705	CIRCUIT BREAKER	M/P	2318014
CB94	700-036-10	CIRCUIT BREAKER	M/P	2318014
C13	150D476X0035S2	CAPACITOR (47 μF 35V)	SPRAGUE	PER W/D
E5	CVLB 8950	TEMP CONTROL BOX	BAR-COL	
R105	F4R0 (10A 40W)	RESISTOR	OHM	2318354
B20	2380058-1	SOLENOID VALVE-CABIN AIR FLOW	-	2319167
B9	2319188-1	VALVE AIR COND	LEAR	2319116
SR60	IN2069	DIODE	MOT	PER W/D
SR59	IN2069	DIODE	MOT	PER W/D

	NAME	DATE
DRAWN	HERMAN	4-25-67
GROUP	OF CONFIA	4-29-67
CHECK		6-15-67
STRESS		
PROJ		

LEAR-JET P. O. BOX 1289 WICHITA, KANSAS

TITLE: WIRING DIAGRAM - HEATING & VENT

DRG NO 2308000 A

SCALE NONE SHEET 15.13 OF

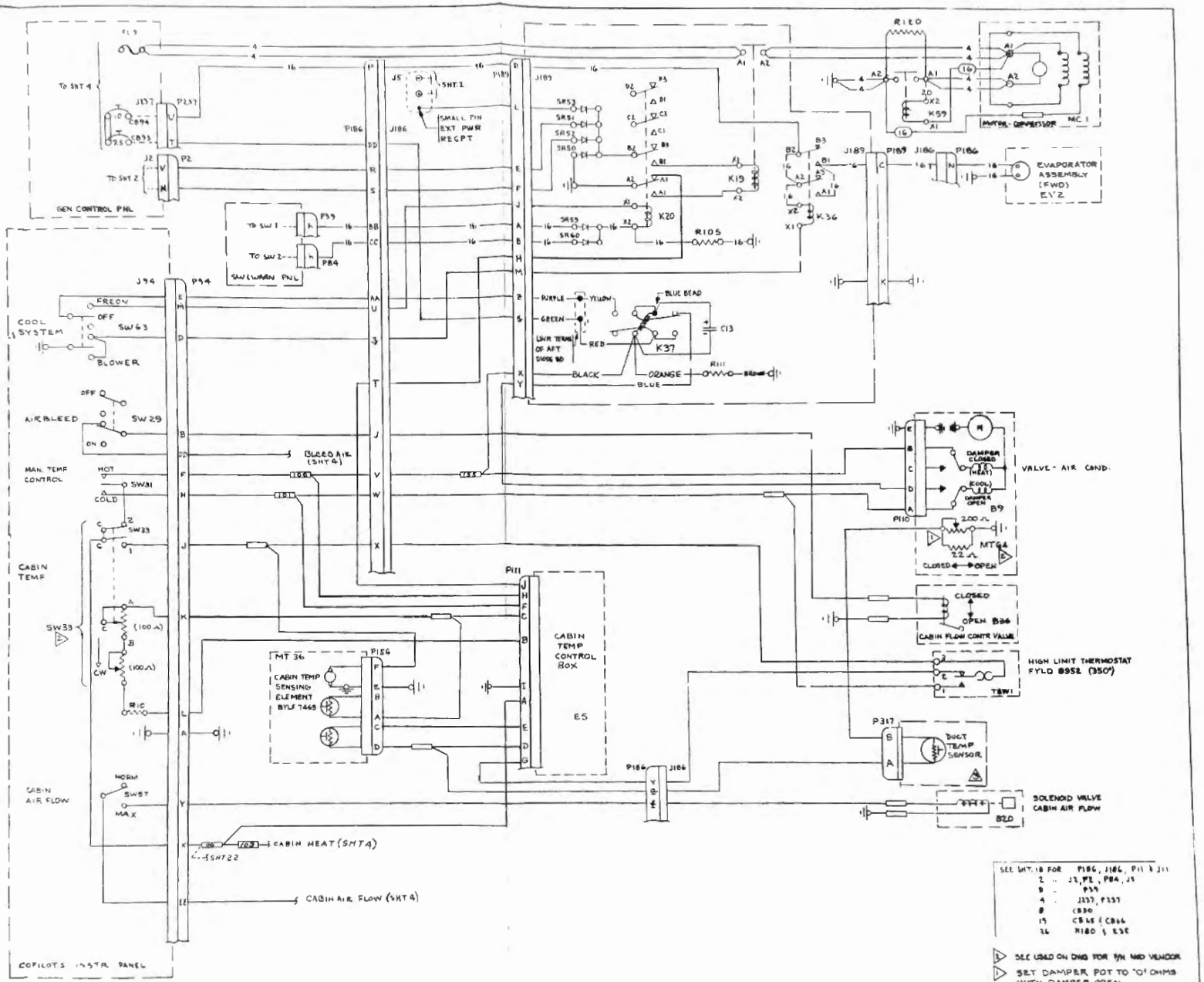

SYM/QTY	PART NUMBER	NAME	VENDOR	INSTAL DWG
K59	S-406-1	RELAY		2319112
J189	SBC1-6FFML	RECPT		PER W/D
J94	SBC2-33PC	RECPT		
P94	SB02-36TSNL	PLUG		
P189	SBC1-5TSNR	PLUG		PER W/D
R120	2310015-1	RESISTOR (SHUNT)	-	2319112
TSW1	FYLD 8952 (350°)	THERMOSTAT: HIGH LIMIT	BAR-COL	2319116
SR53	IN2069	DIODE	MOT	PER W/D
SR52	IN2069	DIODE	MOT	PER W/D
SR51	IN2069	DIODE	MOT	PER W/D
SR50	IN2069	DIODE	MOT	PER W/D
SW33		TEMP SELECTOR-CABIN	C-H	2314130
SW31	MS12 K13	SWITCH-CABIN TEMP-MAN	C-H	2314130
SW29	MS24 K8	SWITCH-AIR VALVE-LEAK	C-H	2314130
R1C	(SEE SHT 18)	RESISTOR	OHM	2314150
SW57	MST 205N	SWITCH-CABIN A/R FLOW	ALCO	2314130
SW63	MST 205F	SWITCH-COOL SYS	ALCO	2314130
R111	MOR 10-200	RESISTOR	TRU-OHM	2314154
K37	28-1B-126	RELAY	HI-G	2318354
P156	MS3106A-16S-1S	PLUG	-	PER W/D
	MS3057-8B	CABLE CLAMP	-	
	AN3420-6A	SLEEVE	-	
P110	MS3106(J)16S-1S	PLUG	-	
	MS3057-8B		-	PER W/D
	AN3420-6A		-	
P317	MS3106A-18-1S	PLUG		
B26	94R103-1	CONTROL VALVE - CABIN FLOW	JANITROL	2319116
MT36	BYLF 7469	TEMP SENSING ELMT-CABIN	BAR-COL	2311642
MC1	8ER080	MOTOR COMPRESSOR	LEAR	2318113
K20	5402-1	RELAY - AIR COND CONTROL	LEAR	2318354
K19	5400-1	RELAY - AIR COND PWR	LEAR	2318354
	MS28034-1	DUCT TEMP SENSOR		
F15	FLLE (15DA)	CURRENT LIMITER	BUSSMAN	2318013
MT44	(SEE SHT 26)	POTENTIOMETER	LEAR	2319188
E3E		CONTROL BOARD	LEAR	2318031
EV2	6600054-3	EVAPORATOR ASSEMBLY	LEAR	2319064
K36	5401-1	RELAY	—	2318354
CB13	700-036-705	CIRCUIT BREAKER	m/p	2318014
CB14	700-036-10	CIRCUIT BREAKER	m/p	2318614
Z13	150D476X0035S2	CAPACITOR (47 uf 35V)	SPRAGUE	PER W/D
E5	CVLZ 8950	TEMP CONTROL BOX	BAR-COL	2318354
R105	P910 (40Ω, 40W)	RESISTOR	OHM	
B20	23800058-1	SOLENOID VALVE - CABIN AIR FLOW	-	2319167
B9	2319188-1	VALVE - AIR COND	LEAR	2319116
SR60	IN2069	DIODE	MOT	PER W/D
SR59	IN2069	DIODE	MOT	PER W/D

	NAME	DATE
DRAWN	HERMAN	6-28-63
GROUP	D. DANIELS	6-27-63
CHECK		6-28-63
STRESS		
PROJ.		5-7-63

LEAR-JET
P. O. BOX 1280 WICHITA, KANSAS

TITLE: WIRING DIAGRAM - HEATING & VENT

DWG NO. 2308000 | F

SCALE NONE | SHEET 15.14

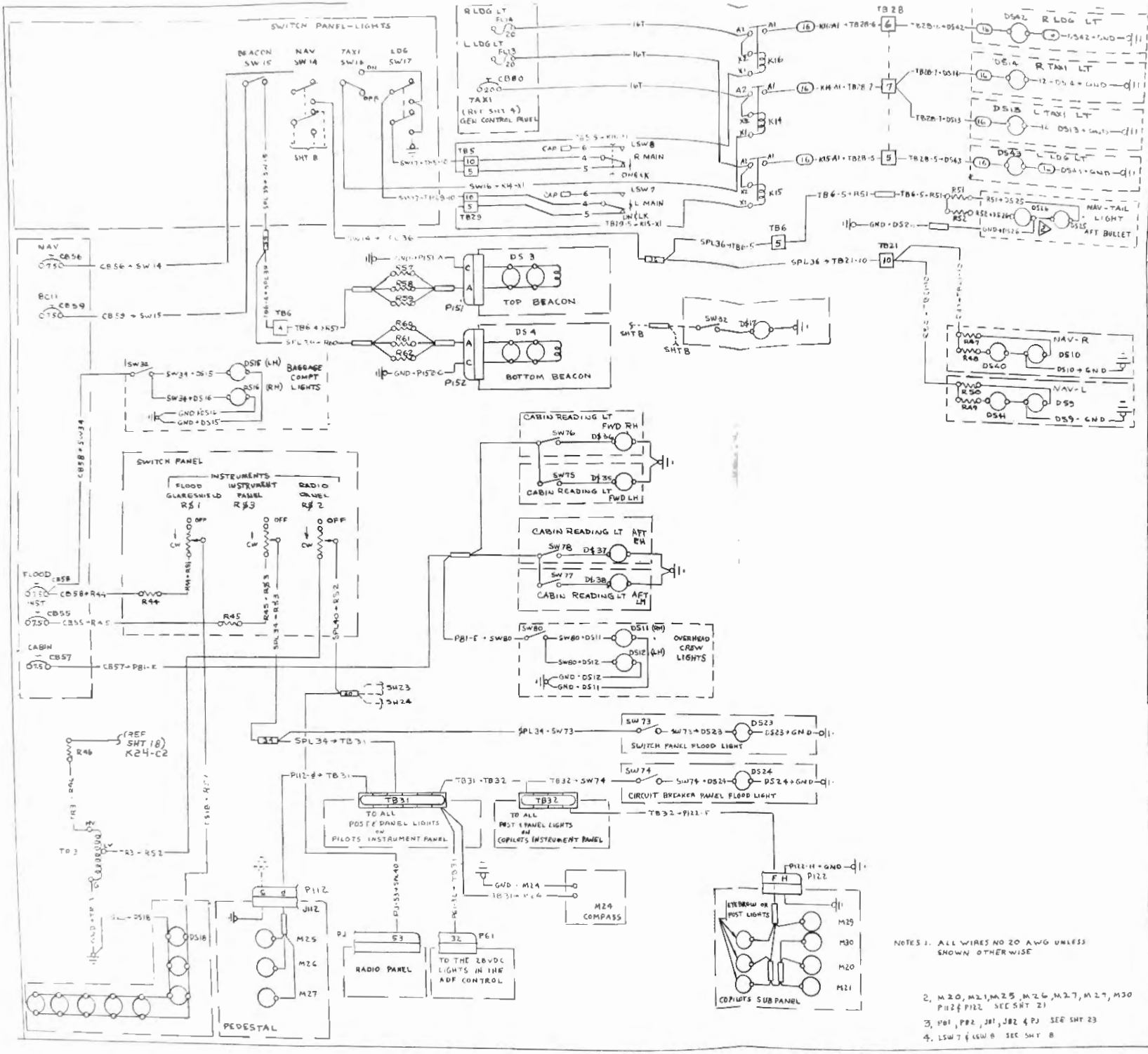

SYMBOL	PART NUMBER	NAME	VENDOR	STAL DWG
P151	MS3108A 10SL 3S	PLUG		PER W/O
	MS3057-4B	ADAPTER		
	AN3420-4A	SLEEVE		
P152	MS3106A 16SL 3S	PLUG		PER W/O
	MS3057 4B	ADAPTER		
	AN3420-4A	SLEEVE		
SW78	575	SWITCH - READ LIGHT AFT RH	GRIMES	23133-12
SW77	575	SWITCH - READ LIGHT AFT LH		
SW76	575	SWITCH - READ LIGHT FWD RH		
SW75	575	SWITCH READ LIGHT FWD LH		
SW74	575	SWITCH CB PANEL FLOOD LIGHT		
SW73	575	SWITCH SW PANEL FLOOD LIGHT		
SW34	575	SWITCH BAGGAGE COMP		
SW32	575	SWITCH - OVERHEAD CREW	GRIMES	2313206
SW80	575	SWITCH - OVERHEAD CREW LT	GRIMES	2313207
SW17	8824 /B	SWITCH LDG	H	23-9570
SW16	8810 /12	SWITCH - TAXI		
SW15	8801 K13	SWITCH - BNG	C & H	23-0350
SW14	8874 K8	SWITCH NAV		
TR3	2318004-1	TRANSFORMER	-	2318000
R$3	XR5673	POT - INSTL PANEL (FLOOD LAMPS)	TRU-OHM	2318050
R$2	XR5624	POT - RADIO PNL (5W 65 OHM)	TRU-OHM	2318050
R$1	XR4978	POT FLOOD (5W - 50 Ω)	TRU-OHM	2318050
E9	2318351-15	RELAY ASSY		3128103
K16	AN3350-1	RELAY - R LDG	ALL ARE A PART OF E9	
K15	AN3350-1	RELAY - L LDG		
K14	AN3350-1	RELAY - TAXI		
P61	(SEE SHT 13)			
R62	MOR-10-5	RESISTOR BOTTOM BEACON 5% 10W	TRU-OHM	2318070
R61	MOR-10-5	RESISTOR - BOTTOM BEACON 5% 10W	TRU-OHM	2318070
R60	MOR-10-5	RESISTOR-BOTTOM BEACON 5% 10W	TRU-OHM	2318070
R59	MOR-10-5	RESISTOR - TOP BEACON 5% 10W	TRU-OHM	2318000
R58	MOR-10-5	RESISTOR - TOP BEACON 5% 10W	TRU-OHM	2318000
R57	MOR-10-5	RESISTOR - TOP BEACON 5% 10W	TRU-OHM	2318000
R52	MOR 20-10	RESISTOR - NAV TAIL 20Ω 20W	TRU-OHM	2313018
R51	MOR 20-10	RESISTOR - NAV TAIL 20Ω 20W	TRU-OHM	2313018
R50	MOR 20-5	RESISTOR - NAV L 5% 20W	TRU-OHM	2313062
R49	MOR 20-5	RESISTOR - NAV L 5% 20W	TRU-OHM	2313062
R48	MOR 20-5	RESISTOR - NAV R 5% 20W	TRU-OHM	2313062
R47	MOR 20-5	RESISTOR - NAV R 5% 20W	TRU-OHM	2313062
M24	C2350-L4-M23	COMPASS	AIRPATH	23-4764
DS38	2318071-8	LIGHT - CABIN READING	-	2313202
DS37	2318071-8	LIGHT - CABIN READING		2313202
DS36	2318071-8	LIGHT - CABIN READING	-	2313202
DS35	2318071-8	LIGHT - CABIN READING		2313202
DS43	D7585-4580	LANDING LIGHT L	GRIMES	2348030
DS42	D7585-4580	LANDING LIGHT R	GRIMES	2348030
DS41	60-0366-1	LIGHT-NAV L A7512-24 BULB)	GE MES	2323048
DS40	60-0366-1	LIGHT NAV R (A7512-24 BULB	GE MES	2323048
DS26	11-240XT-6	LT-NAV TAIL(BULLET) WITH 1683 BULB	LEECRAFT	2331018
DS25	11-240XT-6	LT-NAV TAIL(BULLET) WITH 1683 BULB	LEECRAFT	2331018
DS24	182326	LIGHT - CKT BKR PANEL FLOOD	UCINITE	2313202
DS23	182326	LIGHT - SWITCH PANEL FLOOD	UCINITE	2313202
R46	MOR 10-1	RESISTOR - RADIO PANEL (5W)	TRU-OHM	2318350
R45	MOR 20-2	RESISTOR - PANEL (2Ω 20W)	TRU-OHM	2318350
DS18	M5902832 (BC)	LIGHT - GLARESHIELD	-	2313221
DS17	15-0070-1	LIGHT - DOOR OVERHEAD	GRIMES	2313201
DS16	15-0070-1	LIGHT - BAGGAGE COMP RH	GRIMES	2313202
DS15	15-0070-1	LIGHT - BAGGAGE COMP LH	GRIMES	2313202
DS14	4552	LIGHT - LDG/TAXI R	GE MES	2323048
DS13	4552	LIGHT - LDG/TAXI L	GE MES	2323048
DS12	2318071-8	LIGHT - CREW OVERHEAD RH	-	2313202
DS11	2318071-8	LIGHT - CREW OVERHEAD LH		2313202
DS10	60-0366-1	LIGHT - NAV R (A7512-24 BULB)	GRIMES	2323062
DS9	60-0366-1	LIGHT - NAV L (A7512-24 BULB)	GRIMES	2323062
R44	MOR 10-5	RESISTOR - FLOOD (5W 10W	TRU OHM	2318350
DS4	69950-1	LIGHT - BEACON (BOTTOM)	GRIMES	2338000
DS3	69950-11	LIGHT BEACON (TOP)	GRIMES	2314-72
FL14	MS28937-20	CURRENT LIMITER	BUSSMAN	
FL13	MS28937-20	CURRENT LIMITER	BUSSMAN	
CB80	BC1-20	CKT BKR - TAXI	BRILES	23-8010
CB59	BC1-7	CKT BKR - BCN		2318350
CB58	BC1-7	CKT BKR - FLOOD		2318350
CB57	BC1-7	CKT BKR - CABIN		
CB56	BC1-7	CKT BKR - NAV		
CB55	BC1-7	CKT BKR - INST	BRILES	2318350

NOTES: 1. ALL WIRES NO 20 AWG UNLESS SHOWN OTHERWISE

2. M20, M21, M25, M26, M27, M29, M30 P112 & P122 SEE SHT 21

3. PB1, PB2, JB1, JB2 & PJ SEE SHT 23

4. LSW7 & LSW8 SEE SHT 8

LEAR-JET P.O. BOX 1780 WICHITA KANSAS

	NAME	DATE
DRAWN	HUTTMAN	4-2-63
GROUP	OPHEIM	4-4-63
CHECK		
STRESS		
PROJ		

WIRING DIAGRAM - LIGHTING

DWG NO 2308000 A

SHEET 17.02 OF

SYMBOL	PART NUMBER	NAME	VENDOR	INSTAL DWG
P151	MS 3106A 10SL-3S	PLUG		PER W/D
	MS 3057-4B	ADAPTER		
	AN 3420-4A	SLEEVE		
P152	MS 3106A 10SL-3S	PLUG		
	MS 3057-4B	ADAPTER		
	AN 3420-4A	SLEEVE		PER W/D
SW78	S7S	SWITCH: REAR LIGHT AFT RH	LEVITON	2316078
SW77	S7S	SWITCH: READ LIGHT AFT LH		
SW76	S7S	SWITCH: READ LIGHT FWD RH		
SW75	S7S	SWITCH: READ LIGHT FWD LH		2316078
SW74	S78	SWITCH - C-B PANEL FLOOD LIGHT		2313202
SW73	S7S	SWITCH - SW PANEL FLOOD LIGHT		
SW84	S7S	SWITCH - BAGGAGE COMP		
SW82	S7S	SWITCH - OVERHEAD DOME	LEVITON	2313202
SW80	S1S	SWITCH - OVERHEAD CREW LT	LEVITON	2313202
SW86 THRU SW94	S1S	SWITCH - CABIN READING LT	LEVITON	2313173
SW17	8824 NB	SWITCH: LDG	C-H	2318350
SW16	8810 K12	SWITCH: TAXI		
SW15	8810 K13	SWITCH: BNC		
SW14	8824 NB	SWITCH - NAV	C-H	2318350
TR3	23BD042-1	TRANSFORMER	-	2318200
RS3	KR5W75	POT - INSTL PANEL (.5A 5W MAX)	TRU-OHM	2318380
RS2	KR5W24	POT: RADIO PNL (5.45A 25W)	TRU-OHM	2318350
RS1	KR49W8	POT: FLOOD (.35A 10W)	TRU-OHM	2318350
K16	AN3350-1	RELAY - R LDG.	-	2318351
K15	AN3350-1	RELAY - L LDG	-	2318351
K14	AN3350-1	RELAY - TAXI	-	2318351
FL13 & FL14	MS 28937-20 (SEE SHT 13)	CURRENT LIMITER		
R62	MOR-10-5	RESISTOR - BOTTOM BEACON - 5A 10W	TRU-OHM	2318070
R61	MOR-10-5	RESISTOR - BOTTOM BEACON - 5A 10W	TRU-OHM	2318070
R60	MOR-10-5	RESISTOR - BOTTOM BEACON - 5A 10W	TRU-OHM	2318070
R59	MOR-10-5	RESISTOR - TOP BEACON - 5A 10W	TRU-OHM	2338000
R58	MOR-10-5	RESISTOR - TOP BEACON - 5A 10W	TRU-OHM	2338000
R57	MOR-10-5	RESISTOR - TOP BEACON - 5A 10W	TRU-OHM	2338000
R52	MOR 20-10	RESISTOR - NAV TAIL - 20A 25W	TRU-OHM	2331018
R51	MOR 20-10	RESISTOR - NAV TAIL - 20A 25W	TRU-OHM	2331018
R50	MOR 20-5	RESISTOR - NAV L - 5A 25W	TRU-OHM	2329062
R49	MOR 20-5	RESISTOR - NAV L - 5A 25W	TRU-OHM	2329062
R48	MOR 20-5	RESISTOR - NAV R - 5A 25W	TRU-OHM	2329062
R47	MOR 20-5	RESISTOR - NAV R - 5A 25W	TRU-OHM	2329062
M24	C7350-A M13	COMPASS	AIRPATH	2314064
DS38	10-0113-2	LIGHT - CABIN READING	GRIMES	2314078
DS37	10-0113-1	LIGHT - CABIN READING		2314078
DS36	10-0113-2	LIGHT - CABIN READING		2314078
DS35	10-0113-1	LIGHT - CABIN READING		2314078
DS43	D7655-4580	LANDING LIGHT L	GRIMES	2345030
DS42	D7655-4580	LANDING LIGHT R	GRIMES	2345030
DS41	60-0366-1	LIGHT: NAV L (A7512-24 BULB)	GRIMES	2329062
DS40	60-0366-1	LIGHT - NAV R (A7512-24 BULB)	GRIMES	2329062
DS26	11-2603T-6	LT - NAV TAIL (BULB) WITH #55 BULB	LECTRAFT	2331018
DS25	11-2603T-6	LT - NAV TAIL (BULB) WITH #55 BULB	LECTRAFT	2331018
DS24	8232-6	LIGHT - CKT BKR PANEL FLOOD	VOLUNITE	2313202
DS23	8232-6	LIGHT - SWITCH PANEL FLOOD	VOLUNITE	2313202
DS58 THRU DS62	2180	LIGHT - CABIN READING	WEMAC	2313173
R46	MOR 10-1	RESISTOR - RADIO PANEL (1410W)	TRU-OHM	2318350
R45	MOR 20-2	RESISTOR - PANEL (2A 20W)	TRU-OHM	2318350
DS18	MS90283-2 (BA)	LIGHT - GLARESHIELD	-	2313201
DS17	10-0113-1	LIGHT - DOOR OVERHEAD	GRIMES	2314078
DS16	15-0070-1	LIGHT - BAGGAGE COMP RH	GRIMES	2313202
DS15	15-0070-1	LIGHT - BAGGAGE COMP LH	GRIMES	2313202
DS14	4552	LIGHT - LDG (TAXI) R	GRIMES	2323098
DS13	4552	LIGHT - LDG (TAXI) L	GRIMES	2323098
DS12	2316 C71-5	LIGHT - CREW OVERHEAD RH		2313202
DS11	2316 C71-5	LIGHT - CREW OVERHEAD LH		2313202
DS10	60-0366-1	LIGHT - NAV R (A7512-24 BULB)	GRIMES	2323062
DS9	60-0366-1	LIGHT - NAV L (A7512-24 BULB)	GRIMES	2323062
R44	MOR 10-5	RESISTOR - FLOOD (5A 10W	TRU-OHM	2318350
DS8	G8950-1	LIGHT - BEACON (BOTTOM)	GRIMES	2338000
DS7	G8950-1	LIGHT - BEACON (TOP)	GRIMES	2318072
CB82	BC1-20	CKT BKR - R LDG	BRILES	2318010
CB81	BC1-20	CKT BKR - L LDG		2318010
CB80	BC1-20	CKT BKR - TAXI		2318010
CB59	BC1-7	CKT BKR - BCN		2318350
CB58	BC1-7	CKT BKR - FLOOD		2318350
CB57	BC1-7	CKT BKR - CABIN		
CB56	BC1-7	CKT BKR - NAV		
CB55	BC1-7	CKT BKR - INST	BRILES	2318350

LEAR-JET

P.O. BOX 1280
WICHITA, KANSAS

	NAME	DATE
DRAWN	HERMAN	4-2-63
GROUP	ONHEIM	4-3-63
CHECK		4-3-63
STRESS		
PROJ		4-3-63

TITLE: WIRING DIAGRAM - LIGHTING

DWG NO: 2308000 A

17.04

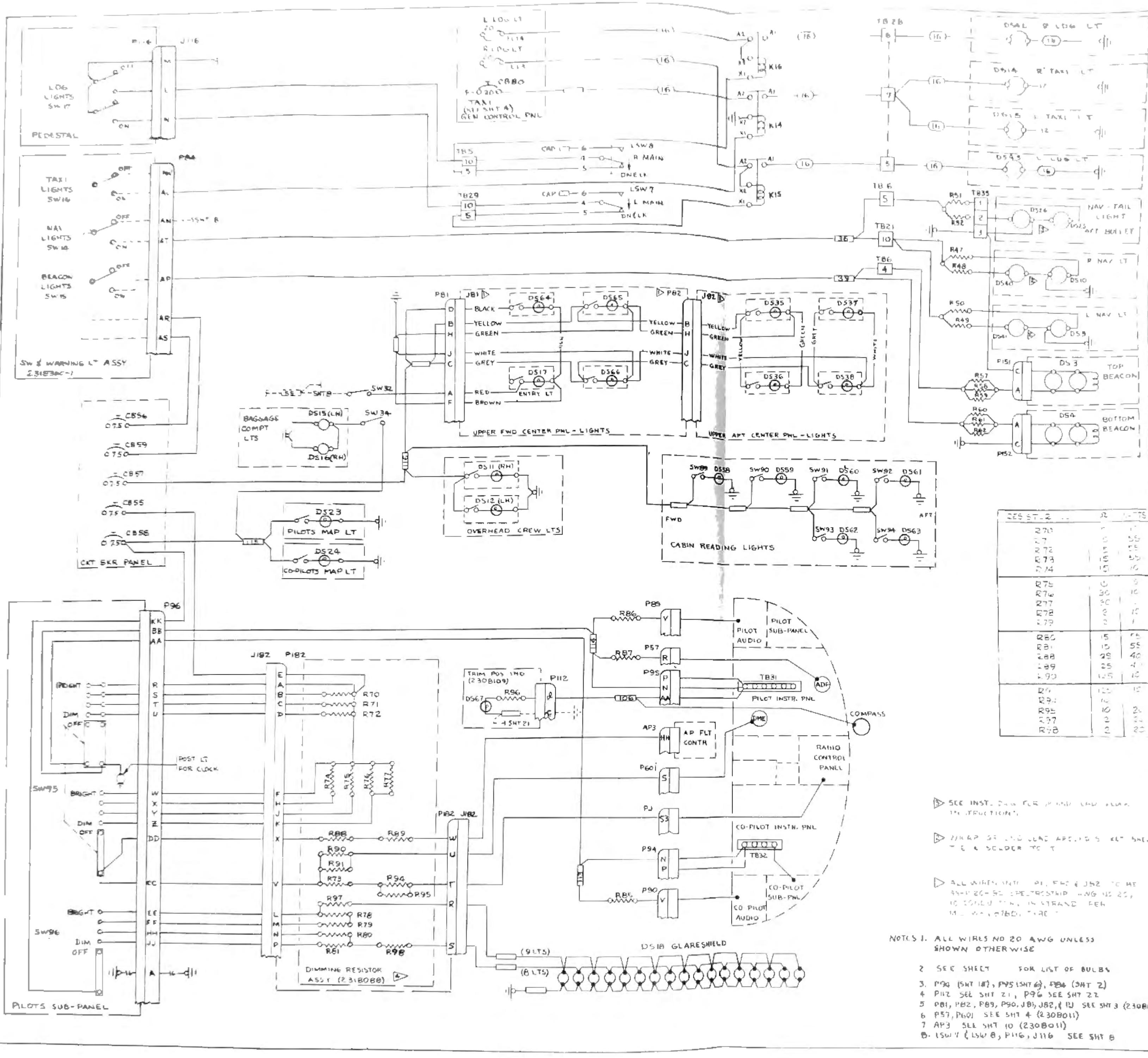

RES ST-2 ...	Ω	WATTS
R70	[illegible]	[illegible]
R71	[illegible]	55
R72	5	55
R73	15	55
R74	15	10
R75	[illegible]	5
R76	30	10
R77	30	[illegible]
R78	2	15
R79	2	[illegible]
R86	15	55
R87	15	55
R88	25	40
R89	25	40
R90	125	10
R91	125	15
R94	10	[illegible]
R95	10	25
R97	2	25
R98	2	25

▷ SEE INST. DWG FOR ... INSTRUCTIONS.

▷ WRAP ... LEAD ... SOLDER TO IT

▷ ALL WIRES ... P1, P82 & JB2 TO BE ... 25, ... STRAND ...

NOTES 1. ALL WIRES NO 20 AWG UNLESS SHOWN OTHERWISE

2. SEE SHEET ... FOR LIST OF BULBS

3. P96 (SHT 18), P95 (SHT 6), P84 (SHT 2)

4. P112 SEE SHT 21, P96 SEE SHT 22

5. PB1, PB2, P89, P90, JB1, JB2, & 1J SEE SHT 3 (2308011)

6. P57, P601 SEE SHT 4 (2308011)

7. AP3 SEE SHT 10 (2308011)

8. LSW7 & LSW8, P116, J116 SEE SHT 8

SYMBOL	PART NUMBER	NAME	VENDOR	... DWG
P161	MS3106A10SL-3S	PLUG		
	MS3057-4B	ADAPTER		
	AN3420-4A	SLEEVE		
P152	MS3106A10SL-3S	PLUG		
	MS3057-4B	ADAPTER		
	AN3420-4A	SLEEVE		
	201359-2	HOUSING		
P182	42080-1 [illegible]	SOCKETS		
	201389-2	JACKSCREWS		
	20[illegible]-2	JACKSCREWS		
	201229-1	CLAMP		
	201786-[illegible]	[illegible]		
SW16	575	SWITCH [illegible]		
SW32	575	[illegible]		
SW96	[illegible]	SWITCH [illegible]		
SW89 thru SW94	575	SWITCH - CABIN READING [illegible]		
SW95	23[illegible]	SWITCH		
SW[illegible]	8869K4	SWITCH [illegible]		
SW16	8810 K12	SWITCH TAXI		
SW[illegible]	[illegible] K12	SWITCH [illegible]		
SW[illegible]	[illegible]-10 K12	SWITCH NAV		
J182	200512-1	HOUSING		
	42081-1 (E-[illegible])	PINS		
	200874-2	JACKSCREWS		
	200875-2	JACKSCREWS		
	201229-1	CLAMP		
K16	AN3350-[illegible]	RELAY [illegible]		[illegible]
K15	AN3350-1	RELAY [illegible]		[illegible]
K14	AN3350-[illegible]	RELAY - TAXI		[illegible]
P96	[illegible]			
R52	[illegible]	RESISTOR 47Ω 13 WATT	[illegible]	[illegible]
R55[illegible]	100 Ω WATT	RESISTOR - MOLD COMP [illegible]	[illegible]	[illegible]
R60[illegible]	MOR-10-5	RESISTOR [illegible]	[illegible]	[illegible]
R57, 58, 59	MOR-10-5	RESISTOR [illegible]	[illegible]	[illegible]
R52	MOR 20-10	RESISTOR - [illegible] TAIL	[illegible]	[illegible]
R51	MOR 20-10	RESISTOR - [illegible]	[illegible]	[illegible]
R50	MOR 20-5	[illegible]	[illegible]	[illegible]
R49	MOR 20-5	[illegible]	[illegible]	[illegible]
R48	MOR 20-5	[illegible]	[illegible]	[illegible]
R47	MOR 20-3	[illegible]	[illegible]	[illegible]
DS66	[illegible]	LIGHT - CABIN READING	GRIMES	[illegible]
DS38	[illegible]	LIGHT - CABIN READING	GRIMES	[illegible]
DS37	10-0115-4	[illegible]	GRIMES	[illegible]
DS36	10-0115-3	LIGHT - CABIN READING	GRIMES	[illegible]
DS35	10-0115-4	LIGHT - CABIN READING	GRIMES	[illegible]
DS43	[illegible]-4550	LAMP [illegible]	[illegible]	[illegible]
DS42	[illegible]	[illegible]	[illegible]	[illegible]
DS41	[illegible]	LIGHT NAV L (A7512-24 BULB)	GRIMES	[illegible]
DS40	[illegible]	LIGHT NAV R (A7512-24 BULB)	GRIMES	[illegible]
DS26	[illegible]	LT - NAV TAIL [illegible] 1682 BULB	LEECRAFT	[illegible]
DS25	[illegible]	LT - NAV TAIL [illegible] 1683 BULB	LEECRAFT	[illegible]
DS24	B355FA	LIGHT - CO-PILOTS MAP (305 BULB)	GRIMES	23 33
DS23	B355SA	LIGHT - PILOTS MAP (305 BULB)	GRIMES	23 33
DS58 thru DS63	[illegible]-2150	LIGHT - CABIN READING	WEMAC	[illegible]
DS64	10-0115-4	LIGHT - CABIN READING	GRIMES	[illegible]
DS65	10-0115-4	[illegible]	GRIMES	[illegible]
DS18	7-01 [illegible]	LIGHT - GLARESHIELD [illegible]	LEECRAFT	[illegible]
DS17	[illegible]	LIGHT - DOOR OVERHEAD	GRIMES	[illegible]
DS16	[illegible]	LIGHT - BAGGAGE COMP RH	GRIMES	[illegible]
DS15	[illegible]	LIGHT - BAGGAGE COMP LH	GRIMES	[illegible]
DS14	4552	LIGHT - TAXI	GRIMES	[illegible]
DS13	4552	LIGHT - TAXI	GRIMES	[illegible]
DS12	[illegible]	LIGHT - CREW OVERHEAD LH	GRIMES	[illegible]
DS11	[illegible]	LIGHT - CREW OVERHEAD RH	GRIMES	[illegible]
DS10	60-0366-1	LIGHT [illegible]	GRIMES	[illegible]
DS9	60-0366-1	LIGHT - NAV [illegible]	GRIMES	[illegible]
DS67	MS90[illegible]	LIGHT [illegible]	—	[illegible]
DS4	G9950-1	LIGHT - BEACON (BOTTOM)	GRIMES	[illegible]8000
DS3	G9950-11	LIGHT - BEACON (TOP)	GRIMES	231[illegible]72
FL14	MS28937-20	CURRENT LIMITER	BUSSMAN	
FL13	MS28937-20	CURRENT LIMITER	BUSSMAN	
CB80	700-036-20	CKT BKR - TAXI		2318010
CB59	[illegible]	CKT BKR - BCN		2318350
CB58		CKT BKR - FLOOD		2318350
CB57		CKT BKR - CABIN		
CB56		CKT BKR - NAV		
CB55	[illegible]	CKT BKR - [illegible]	[illegible]	[illegible]8350

LEAR-JET

P.O. BOX 1280 WICHITA KANSAS

	NAME	DATE
DRAWN	[illegible]ERMAN	[illegible]-2-63
GROUP	OPHE[illegible]	4-2-6[illegible]
CHECK	[illegible]	[illegible]
STRESS		
PROJ	[illegible]	[illegible]

WIRING DIAGRAM - LIGHTING

2303000 A

SHEET 17.07

AIRC[illegible] -015 [illegible] [illegible]3-018 [illegible]

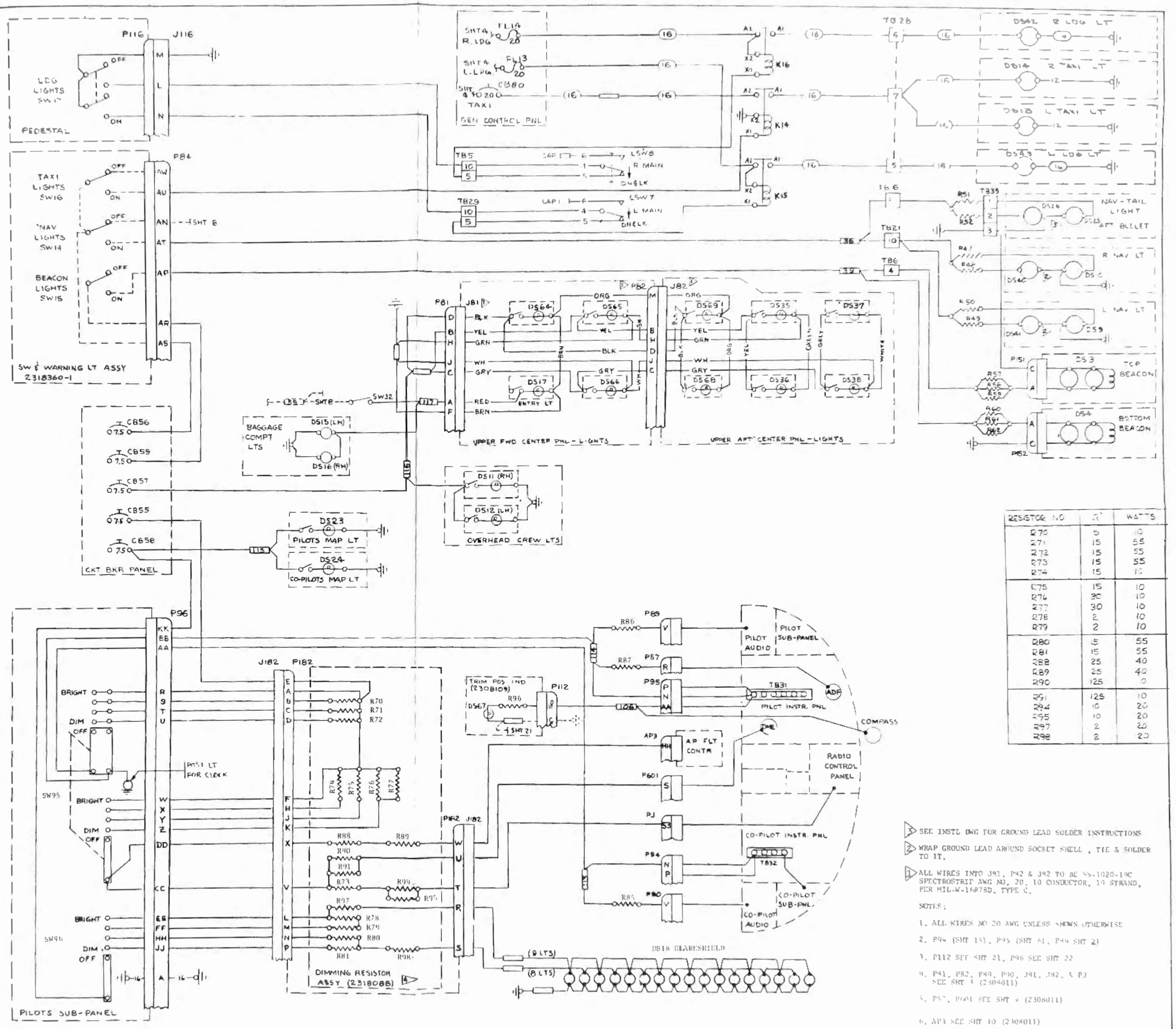

RESISTOR NO	Ω	WATTS
R70	5	10
R71	15	55
R72	15	55
R73	15	55
R74	15	10
R75	15	10
R76	30	10
R77	30	10
R78	2	10
R79	2	10
R80	5	55
R81	15	55
R88	25	40
R89	25	40
R90	125	10
R91	125	10
R94	10	20
R95	10	20
R97	2	20
R98	2	20

1. SEE INSTL DWG FOR GROUND LEAD SOLDER INSTRUCTIONS
2. WRAP GROUND LEAD AROUND SOCKET SHELL, TIE & SOLDER TO IT.
3. ALL WIRES INTO J81, P82 & J82 TO BE SS-1020-19C SPECTROSTRIP AWG NO. 20, 10 CONDUCTOR, 19 STRAND, PER MIL-W-16878D, TYPE C.

NOTES:

1. ALL WIRES NO 20 AWG UNLESS SHOWN OTHERWISE
2. P94 (SHT 15), P95 (SHT 6), P44 SHT 23
3. P112 SEE SHT 21, P96 SEE SHT 22
4. P81, P82, P89, P90, J81, J82, & PJ SEE SHT 3 (2308011)
5. P57, P601 SEE SHT 4 (2308011)
6. AP3 SEE SHT 10 (2308011)
7. LSW 7 & LSW8, P116, J116 SEE SHT 8

SYMBOL	PART NUMBER	NAME	VENDOR	INSTAL DWG
P151	MS3106A18-...	PLUG		PER W/D
	MS3057-...	ADAPTER		
	AN3420-...	SLEEVE		
P152	MS3106A18-...	PLUG		
	MS3057-...	ADAPTER		
	AN3420-...	SLEEVE		PER W/D
P182	201358-2	HOUSING	AMP	
	42980-... (26 EA)	SOCKETS		
	200389-2	JACKSCREWS		
	201388-2	JACKSCREWS		
	201229-1	CLAMP		
	201765-4	GUARD		PER W/D
SW32	575	SWITCH - OVERHEAD DOOR	LEVITON	2313311
SW56	2314111-2	SWITCH - FLOOD LTS DIMMING	—	2314091
SW95	2314111-1	SWITCH - INSTR PNL DIMMING		2314081
SW17	8869K4	SWITCH - LDG	C-H	2315130
SW16	8810-K12	SWITCH - TAXI		2318360
SW15	8810 K12	SWITCH - BNC		2318360
SW14	8810 K12	SWITCH - NAV	C-H	2318360
J182	200812-2	HOUSING	AMP	PER W/D
	42981-1 (26 EA)	PINS		
	200874-2	JACKSCREWS		
	200875-2	JACKSCREWS		
	201229-1	CLAMP	AMP	PER W/D
K16	AN3350-1	RELAY - R LDG.	—	2318351
K15	AN3350-1	RELAY - L LDG	—	2318351
K14	AN3350-1	RELAY - TAXI	—	2318351
F56	(REF SHT 22)			
R92	HS-10	RESISTOR - 47Ω 3 WATT	DALE	PER W/D
R85,86,87	100Ω 1 WATT	RESISTOR - MOLD COMP 2.07.	OHM	PER W/D
R60,61,62	MOR-10-5	RESISTOR - BOTTOM BEACON - 5Ω 10W	TRU-OHM	2316070
R57,58,59	MOR-10-5	RESISTOR - TOP BEACON - 5Ω 10W	TRU-OHM	2338000
R52	MOR 20-10	RESISTOR - NAV TAIL - 10Ω 20W	TRU-OHM	2331018
R51	MOR 20-10	RESISTOR - NAV TAIL - 10Ω 20W	TRU-OHM	2331018
R50	MOR 20-5	RESISTOR - NAV L 5Ω 20W	TRU-OHM	2323062
R49	MOR 20-5	RESISTOR - NAV L 5Ω 20W	TRU-OHM	2323062
R48	MOR 20-5	RESISTOR - NAV R - 5Ω 20W	TRU-OHM	2323062
R47	MOR 20-5	RESISTOR - NAV R - 5Ω 20W	TRU-OHM	2323062
DS66	10-0115-3	LIGHT - CABIN READING	GRIMES	2314078
DS38	10-0115-3	LIGHT - CABIN READING	GRIMES	2314078
DS37	10-0115-4	LIGHT - CABIN READING	GRIMES	2314078
DS36	10-0115-3	LIGHT - CABIN READING	GRIMES	2314078
DS35	10-0115-4	LIGHT - CABIN READING	GRIMES	2314078
DS43	D7585-4580	LANDING LIGHT L	GRIMES	2348030
DS42	D7585-4580	LANDING LIGHT R	GRIMES	2348030
DS41	60-0366-1	LIGHT - NAV L (A7512-24 BULB)	GRIMES	2323062
DS40	60-0366-1	LIGHT - NAV R (A7512-24 BULB)	GRIMES	2323062
DS26	11-240XT-6	LT - NAV TAIL (BULLET) WITH 1683 BULB	LEECRAFT	2331018
DS25	11-240XT-6	LT - NAV TAIL (BULLET) WITH 1683 BULB	LEECRAFT	2331018
DS24	B3555A	LIGHT - CO-PILOTS MAP (305 BULB)	GRIMES	2313311
DS23	B3555A	LIGHT - PILOTS MAP (305 BULB)	GRIMES	2313311
DS68	10-0115-3	LIGHT - CABIN READING	GRIMES	2314078
DS69	10-0115-4	LIGHT - CABIN READING	GRIMES	2314078
DS64	10-0115-4	LIGHT - CABIN READING	GRIMES	2314078
DS65	10-0115-4	LIGHT - CABIN READING	GRIMES	2314078
DS18	7-01 (17 REQD)	LIGHT - GLARESHIELD (WITH 338 BULB)	LEECRAFT	2313201
DS17	10-0115-3	LIGHT - DOOR OVERHEAD	GRIMES	2314078
DS16	15-0070-1	LIGHT - BAGGAGE COMP RH	GRIMES	2313154
DS15	15-0070-1	LIGHT - BAGGAGE COMP LH	GRIMES	2313154
DS14	4552	LIGHT - R TAXI	GRIMES	2323048
DS13	4552	LIGHT - L TAXI	GRIMES	2323048
DS12	10-0115-4	LIGHT - CREW OVERHEAD LH	GRIMES	2313311
DS11	10-0115-3	LIGHT - CREW OVERHEAD RH	GRIMES	2313311
DS10	60-0366-1	LIGHT - NAV R (A7512-24 BULB)	GRIMES	2323062
DS9	60-0366-1	LIGHT - NAV L (A7512-24 BULB)	GRIMES	2323062
DS67	MS90283-1	LIGHT - PEDESTAL (WITH 313 BULB)	—	2315130
DS4	G9950-1	LIGHT - BEACON (BOTTOM)	GRIMES	2338000
DS3	G9950-11	LIGHT - BEACON (TOP)	GRIMES	2318072
FL13, FL14	MS28937-20	CURRENT LIMITER		
CB80	700-036-20	CKT BKR - TAXI		2318010
CB59	41-2-514-LN2-16080(CT)	CKT BKR - BCN		2318350
CB58		CKT BKR - FLOOD		2318350
CB57		CKT BKR - CABIN		
CB56		CKT BKR - NAV		
CB55	41-2-514-LN2-...	CKT BKR - INST	ETA	2318350

LEAR-JET

P. O. BOX 1280
WICHITA, KANSAS

	NAME	DATE
DRAWN	HERMAN	4-2-63
GROUP	OPHEIM	4-2-63
CHECK	[illegible]	4-3-63
STRESS		
PROJ	[illegible]	4-2-63

TITLE: WIRING DIAGRAM - LIGHTING

DWG NO 2308000 A

SCALE NONE SHEET 17.08 OF

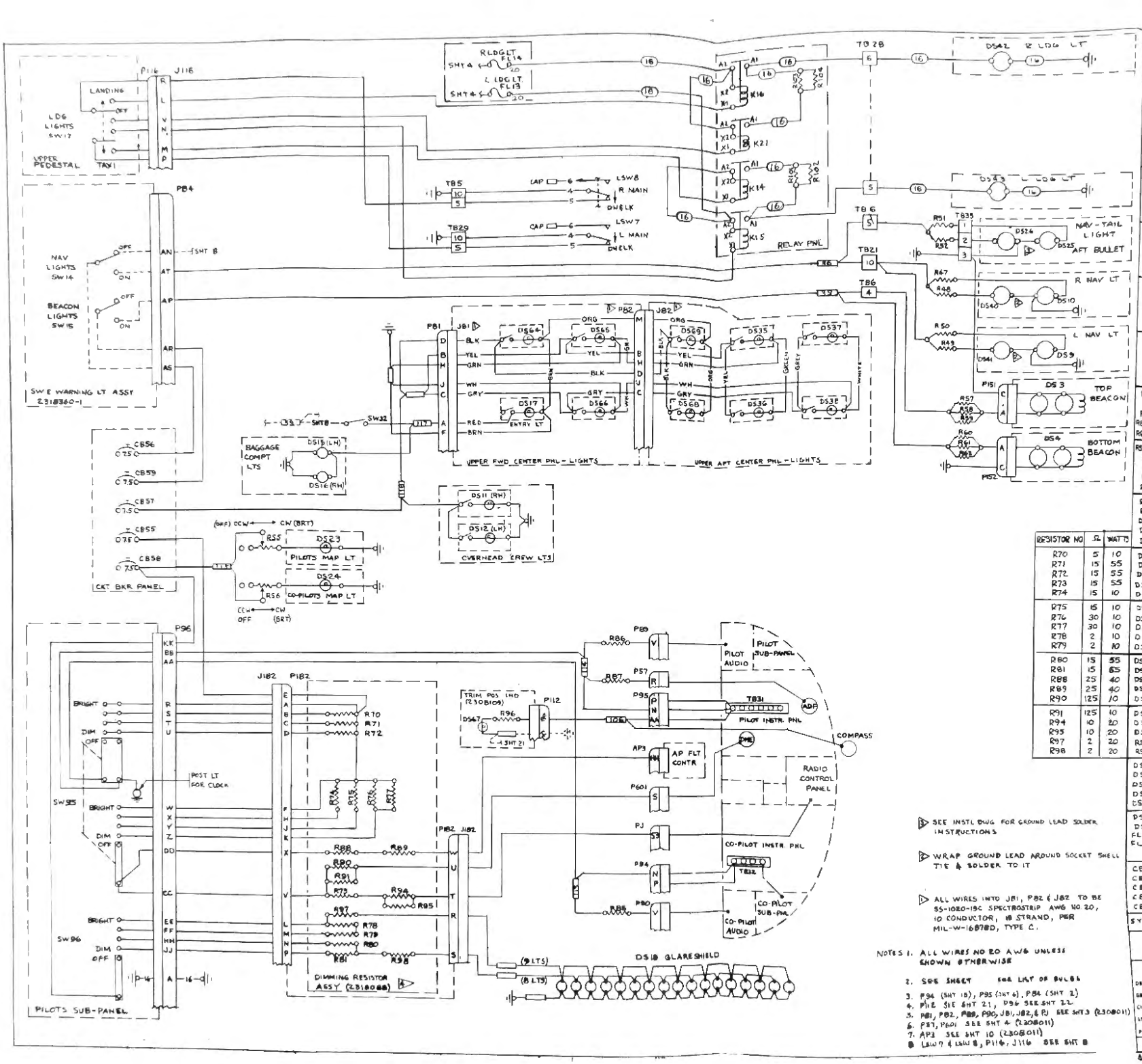

RESISTOR NO	Ω	WATTS
R70	5	10
R71	15	55
R72	15	55
R73	15	55
R74	15	10
R75	15	10
R76	30	10
R77	30	10
R78	2	10
R79	2	10
R80	15	55
R81	15	65
R88	25	40
R89	25	40
R90	125	10
R91	125	10
R94	10	20
R95	10	20
R97	2	20
R98	2	20

P151	MS3106A10SL-3S	PLUG		PER W/D
	MS3057-4B	ADAPTER		
	AN3420-4A	SLEEVE		
P152	MS3106A10SL-3S	PLUG		PER W/D
	MS3057-4B	ADAPTER		
	AN3420-4A	SLEEVE		
	201389-2	HOUSING	AMP	
P182	42980-1 (24 EA)	SOCKETS		
	201389-2	JACKSCREWS		
	201388-2	JACKSCREWS		
	201229-1	CLAMP		
	201786-4	GUARD		PER W/D
R101	OR55-(1Ω)	RESISTOR (5W)	TRU-OHM	23145A
SW32	575	SWITCH - OVERHEAD CMPT	LEACH	23B3311
SW96	2314111-2	SWITCH - FLOOD LTS DIMMING	"	23B1991
R102	OR55-(1Ω)	RESISTOR (5W)	TRU-OHM	23145A
R103	OR55 (1Ω)	RESISTOR 5W	TRU-OHM	23145A
SW95	2314111-1	SWITCH - INSTR PNL DIMMING	"	2314091
SW17	8869K1	SWITCH - LDG	C-H	23B1339
SW18	8810 K12	SWITCH - TAXI	"	23B3360
SW15	8810 K12	SWITCH - BNC	"	23B3360
SW14	8810 K12	SWITCH - NAV	C-H	23 B360
J182	200512-2	HOUSING	AMP	PER W/D
	42981-1 (24 EA)	PINS	"	"
	200874-2	JACKSCREWS	"	"
	200875-2	JACKSCREWS	"	"
	201229-1	CLAMP	AMP	PER W/D
K16	AN3350-1	RELAY - R LDG.	—	2318355
K15	AN3350-1	RELAY - L LDG	—	2318355
K14	AN3350-1	RELAY - TAXI	—	2318354
P96	(REF SHT 2L)			
K21	AN 3350-1	RELAY-TAXI	—	2318354
R104	OR55 (1Ω)	RESISTOR (5W)	TRU-OHM	23145A
R96	H5-10	RESISTOR - 47Ω 13 WATT	DALE	PER W/D
R85,86,87	100Ω 1 WATT	RESISTOR - MOLD COMP 5%	OHM	PER W/D
R60,61,62	MOR-10-5	RESISTOR - BOTTOM BEACON 5Ω 10W	TRU-OHM	23B075
R57,58,59	MOR-10-5	RESISTOR - TOP BEACON - 5Ω 10W	TRU-OHM	2338000
R52	MOR 20-10	RESISTOR - NAV TAIL 20Ω 20W	TRU-OHM	23310 B
R51	MOR 20-10	RESISTOR - NAV TAIL 20Ω 20W	TRU-OHM	2331018
R50	MOR 20-5	RESISTOR - NAV L 5Ω 20W	TRU-OHM	2329062
R49	MOR 20-5	RESISTOR - NAV L 5Ω 20W	TRU-OHM	2329062
R48	MOR 20-5	RESISTOR - NAV R 5Ω 20W	TRU-OHM	2329062
R47	MOR 20-5	RESISTOR - NAV R 5Ω 20W	TRU-OHM	2329062
DS66	10-0115-3	LIGHT - CABIN READING	GRIMES	23 4078
DS38	10-0115-3	LIGHT - CABIN READING	GRIMES	2314078
DS37	10-0115-4	LIGHT - CABIN READING	GRIMES	23 4078
DS36	10-0115-3	LIGHT - CABIN READING	GRIMES	2314078
DS35	10-0115-4	LIGHT - CABIN READING	GRIMES	23 4078
DS43	D7585-4580	LANDING LIGHT L	GRIMES	2348030
DS42	D7585-4580	LANDING LIGHT R	GRIMES	2348030
DS41	60-0366-1	LIGHT-NAV L (A7512-24 BULB)	GRIMES	2329062
DS40	60-0366-1	LIGHT-NAV R (A7512-24 BULB)	GRIMES	2329062
DS26	11-240XT-6	LT-NAV TAIL&LIT, WHI (683 BULB)	LECRAFT	2331018
DS25	11-240XT-6	LT-NAV TAIL&LIT, WHI (683 BULB)	LECRAFT	2331018
DS24	15-0070-1	LIGHT - CO-PILOTS MAP (305 BULB)	GRIMES	23 3311
DS23	15-0070-1	LIGHT - PILOTS MAP (305 BULB)	GRIMES	2313311
DS68	10-0115-3	LIGHT - CABIN READING	GRIMES	2314078
DS69	10-0115-4	LIGHT - CABIN READING	GRIMES	23 4078
DS64	10-0115-4	LIGHT - CABIN READING	GRIMES	2314078
DS65	10-0115-4	LIGHT - CABIN READING	GRIMES	2314078
DS18	T-01 (17 REQD)	LIGHT - GLARESHIELD (WITH 313 BULB)	LECRAFT	2313201
DS17	10-0115-3	LIGHT - DOOR OVERHEAD	GRIMES	2314078
DS16	15-0070-1	LIGHT - BAGGAGE COMP, RH	GRIMES	2313154
DS15	15-0070-1	LIGHT - BAGGAGE COMP, LH	GRIMES	2313154
R54	XR5251	POT-CO-PILOTS MAP LT (5Ω, 12W)	TRU-OHM	23 3311
R55	XR5251	POT-CO-PILOTS MAP LT (5Ω, 12W)	TRU-OHM	23 3311
DS12	10-0115-4	LIGHT - CREW OVERHEAD, LH	GRIMES	2313311
DS11	10-0115-3	LIGHT - CREW OVERHEAD RH	GRIMES	2313311
DS10	60-0366-1	LIGHT - NAV R (A7512-24 BULB)	GRIMES	2329062
DS9	60-0366-1	LIGHT - NAV L (A7512-24 BULB)	GRIMES	2329062
DS67	M890283-1	LIGHT - PEDESTAL (WITH 313 BULB)	—	2315-30
DS4	G9950-1	LIGHT - BEACON (BOTTOM)	GRIMES	2338000
DS3	G9950-11	LIGHT - BEACON (TOP)	GRIMES	2318072
FL14	MS28937-20	CURRENT LIMITER - R LDG LT	BUSSMAN	
FL13	MS28937-20	CURRENT LIMITER - L LDG LT	BUSSMAN	
CB59	41-2-514-LNZ-160BDIN	CKT BKR - DGN		2318350
CB58		CKT BKR - FLOOD		2318350
CB57		CKT BKR - CABIN		
CB56		CKT BKR - NAV		
CB55	41-2-514-LNZ-160BDIN25A	CKT BKR - INST	ETA	2318350
SYMBOL	PART NUMBER	NAME	VENDOR	INSTAL DWG

NOTES:
1. ALL WIRES NO 20 AWG UNLESS SHOWN OTHERWISE
2. SEE SHEET ___ FOR LIST OF BULBS
3. P96 (SHT 1B), P95 (SHT 6), P84 (SHT 2)
4. P112 SEE SHT 21, P96 SEE SHT 22
5. PB1, PB2, PB8, P80, J81, J82, & PJ SEE SHT 3 (2308011)
6. P87, P601 SEE SHT 4 (2308011)
7. AP3 SEE SHT 10 (2308011)
8. LSW7 & LSW8, P116, J116 SEE SHT 8

▷ SEE INSTL DWG FOR GROUND LEAD SOLDER INSTRUCTIONS

▷ WRAP GROUND LEAD AROUND SOCKET SHELL TIE & SOLDER TO IT

▷ ALL WIRES INTO J81, PB2 & J82 TO BE 55-1020-19C SPECTROSTRIP AWG NO 20, 10 CONDUCTOR, 18 STRAND, PER MIL-W-16878D, TYPE C.

LEAR-JET
P.O. BOX 1288 WICHITA, KANSAS

	NAME	DATE
DRAWN	HERMAN	4-2-63
GROUP	OPHEIM	4-2-63
CHECK		4-2-63
STRESS		
PROJ		4-2-63

TITLE: WIRING DIAGRAM-LIGHTING

DWG NO 2308000 A

SCALE NONE SHEET 17.09

P151 & P152	MS 3106-10SL 3S MS 3057-4B AN 3420-4A	PLUG ADAPTER SLEEVE		
	201358-2		AMP	PER W/O
P182	42980-1 (26 RQ) 201380-2 201388-2 201229-1 201781-4	SOCKETS JACKSCREWS JACKSCREWS CLAMP GUARD		PER W/O
R101	OR55-(1Ω)	RESISTOR (5SW)	TRU-OHM	[illegible]
SW32	575	SWITCH OVERHEAD [illegible]	[illegible]	2313311
SW96	2314111-7	SWITCH FLOOD LTS DIMMING		2313129
R102	OR55-(1Ω)	RESISTOR (5W)		[illegible]
R103	OR55-(1Ω)	RESISTOR (5SW)	TRU-OHM	2318359
SW95	8314-1	SWITCH - INSTR PNL DIMMING		2314081
SW17	[illegible]69K1	SWITCH [illegible]	C-H	2315130
SW16	8810 K12	SWITCH TAXI		2318360
SW15	8810 K12	SWITCH BNC		2318360
SW14	8810 K2	SWITCH NAV	C-H	2318360
J182	200512-2 42981-1 (26 RQ) 200874-2 200875-2 201229-1	HOUSING PINS JACKSCREWS JACKSCREWS CLAMP	AMP AMP	PER W/O PER W/O
K16	AN3350-1	RELAY - R LDG	—	2318351
K15	AN3350-1	RELAY - L LDG	—	2318351
K14	AN3350-1	RELAY - TAXI	—	2318351
P96	REF SHT 22			
K21	AN 3350-1	RELAY-TAXI	—	
R104	OR55-(1/2Ω)	RESISTOR (5W)	TRU-OHM	2318359
R56	YRS251	POT CO-PILOTS MAP LT (SOLD. OH)	TRU-OHM	2313311
R96	HS-10	RESISTOR [illegible]	DALE	PER W/O
R85, 86, 87	100 Ω 1 WATT	RESISTOR-MOLD COMP [illegible]	[illegible]	PER W/O
R60, 61, 62	MOR-10-5	RESISTOR-BOTTOM BEACON-5Ω 10W	TRU-OHM	2318C7C
R57, 58, 59	MOR-10-5	RESISTOR-TOP BEACON-5Ω 10W	TRU-OHM	2338000
R52	MOR 20-10	RESISTOR NAV TAIL 20Ω 20W	TRU-OHM	2331018
R51	MOR 20-40	RESISTOR NAVTAIL 20Ω 20W	TRU-OHM	2331018
R50	MOR 20-5	RESISTOR NAV L 5Ω 20W	TRU-OHM	2323062
R49	MOR 20-5	RESISTOR NAV L 5Ω 20W	TRU-OHM	2323062
R48	MOR 20-5	RESISTOR NAV R 5Ω 20W	TRU-OHM	2323062
R47	MOR 20-5	RESISTOR NAV R 5Ω 20W	TRU-OHM	2323062
DS66	10-C115-3	LIGHT CABIN READING	GRIMES	2314078
DS38	10-C115-3	LIGHT CABIN READING	GRIMES	2314078
DS37	10-C115-4	LIGHT CABIN READING	GRIMES	2314078
DS36	10-C115-3	LIGHT CABIN READING	GRIMES	2314078
DS35	10-C115-4	LIGHT CABIN READING	GRIMES	2314078
DS43	D75 B5-4580	LANDING LIGHT L	GRIMES	2346030
DS42	D75 B5-4580	LANDING LIGHT R	GRIMES	2346030
DS41	60-0366-1	LIGHT-NAV L (A7512-24 BULB)	GRIMES	2323062
DS40	60-0366-1	LIGHT-NAV R (A7512-24 BULB)	GRIMES	2323062
DS26	11-240KT-6	LT-NAV TAIL [illegible] BULB	LEECRAFT	2331018
DS25	11-240KT-6	LT-NAV TAIL [illegible] BULB	LEECRAFT	2331018
DS24	15-0070-1	LIGHT-CO PILOTS MAP (SOFT BULB)	GRIMES	2313311
DS23	15-0070-1	LIGHT-PILOTS MAP (SOFT BULB)	GRIMES	2313311
DS68	10-0115-3	LIGHT-CABIN READING	GRIMES	2314078
DS69	10-0115-4	LIGHT-CABIN READING	GRIMES	2314078
DS64	10-0115-4	LIGHT-CABIN READING	GRIMES	2314078
DS65	10-0115-4	LIGHT-CABIN READING	GRIMES	2314078
DS18	T-D (17 REQD)	LIGHT-GLARESHIELD [illegible]	LEECRAFT	2313201
DS17	10-C115-3	LIGHT - DOOR OVERHEAD	GRIMES	2314078
DS16	15-0070-1	LIGHT - BAGGAGE COMP RH	GRIMES	2313154
DS15	15-0070-1	LIGHT - BAGGAGE COMP LH	GRIMES	2313154
R55	YRS251	POT PILOTS MAP LT [illegible]	TRU-OHM	2313311
DS12	10-0115-4	LIGHT - CREW OVERHEAD LH	GRIMES	2313311
DS11	10-0115-3	LIGHT - CREW OVERHEAD RH	GRIMES	2313311
DS10	60-0366-1	LIGHT - NAV R [illegible]	GRIMES	2323062
DS9	60-0366-1	LIGHT - NAV L [illegible]	GRIMES	2323062
DS67	MS90...	LIGHT-PEDESTAL [illegible]	—	[illegible]
DS4	40-0100-1	LIGHT - BEACON (BOTTOM)	GRIMES	2338000
DS3	40-0100-3	LIGHT BEACON (TOP)	GRIMES	2318C72
FL13 & FL14	MS25937-20	CURRENT LIMITER		
CB59	41-2-514-LN2-40B (20A)	CKT BKR - BCN		2318350
CB58		CKT BKR - FLOOD		2318350
CB57		CKT BKR - CABIN		
CB56		CKT BKR - NAV		
CB55	41-2-514-LN2-40B (7.5A)	CKT BKR - INST	ETA	2318350
SYMBOL	PART NUMBER	NAME	VENDOR	INSTAL DWG

LEAR-JET P.O. BOX 1280 WICHITA KANSAS

	NAME	DATE
DRAWN	HERMAN	4-2-63
GROUP	OPHEIM	4-2-63
CHECK	[illegible]	[illegible]
STRESS		
PROJ	[illegible]	[illegible]

TITLE: WIRING DIAGRAM - LIGHTING

DWG NO 2308000 A

SCALE NONE 7-65 SHEET 17.11 OF

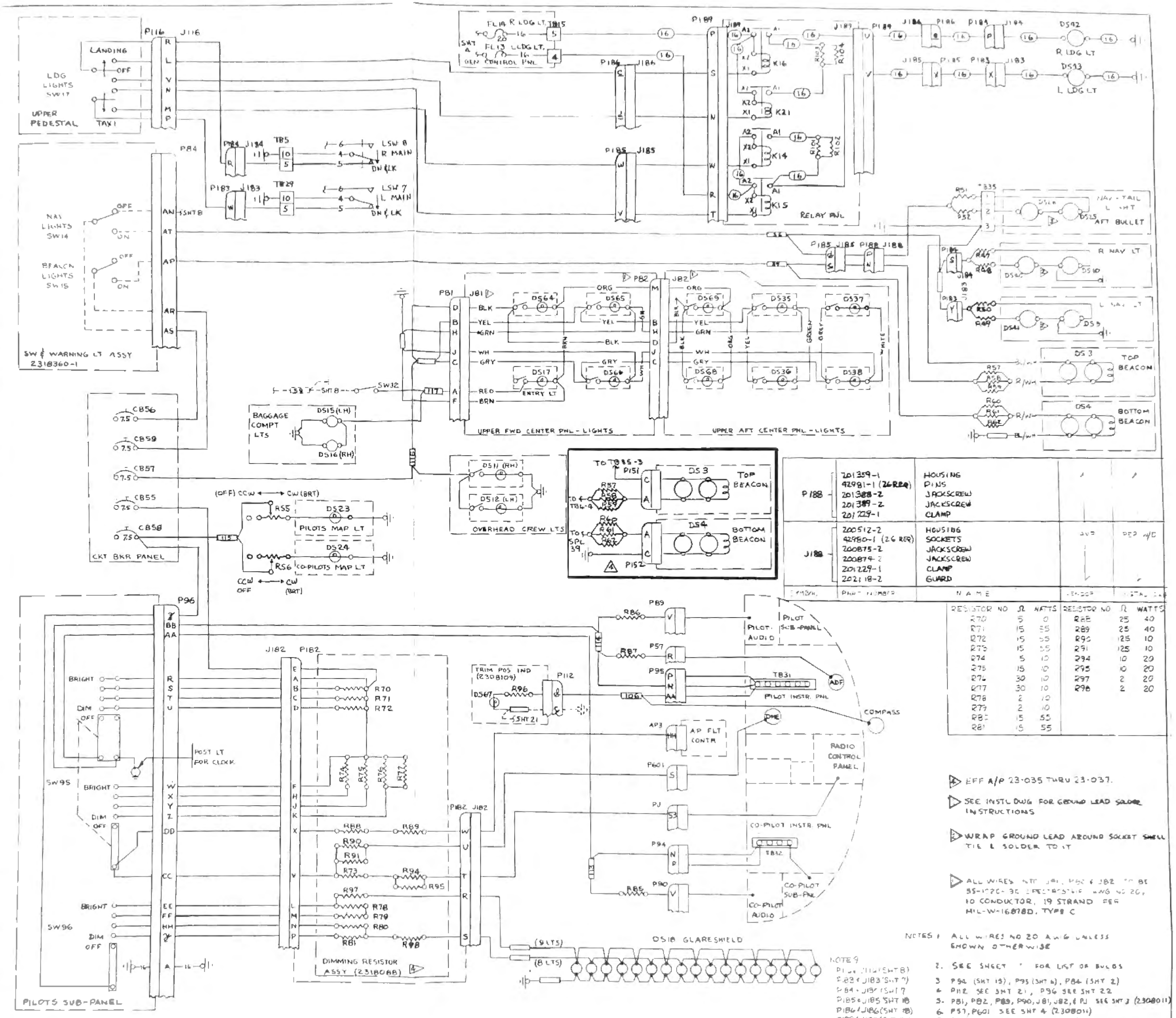

P188	201359-1 42981-1 (26 REQ) 201388-2 201389-2 201229-1	HOUSING PINS JACKSCREW JACKSCREW CLAMP		
J188	200512-2 42980-1 (26 REQ) 200875-2 200874-2 201229-1 202118-2	HOUSING SOCKETS JACKSCREW JACKSCREW CLAMP GUARD	AMP	PER W/O
SYMBOL	PART NUMBER	NAME	VENDOR	INSTAL DWG

RESISTOR NO	Ω	WATTS	RESISTOR NO	Ω	WATTS
R70	5	10	R88	25	40
R71	15	55	R89	25	40
R72	15	55	R90	125	10
R73	15	55	R91	125	10
R74	5	10	R94	10	20
R75	15	10	R95	10	20
R76	30	10	R97	2	20
R77	30	10	R98	2	20
R78	2	10			
R79	2	10			
R80	15	55			
R81	15	55			

⚠4 EFF A/P 23-035 THRU 23-037.

▷ SEE INSTL DWG FOR GROUND LEAD SOLDER INSTRUCTIONS

▷ WRAP GROUND LEAD AROUND SOCKET SHELL TIE & SOLDER TO IT

▷ ALL WIRES AT J81, P82 & J82 TO BE 55-1020-30 [illegible] AWG NO 20, 10 CONDUCTOR, 19 STRAND PER MIL-W-16878D, TYPE C

NOTES: 1. ALL WIRES NO 20 AWG UNLESS SHOWN OTHERWISE

2. SEE SHEET [illegible] FOR LIST OF BULBS
3. P94 (SHT 19), P95 (SHT 6), P84 (SHT 2)
4. P112 SEE SHT 21, P96 SEE SHT 22
5. P81, P82, P89, P90, J81, J82, & PJ SEE SHT 3 (2308011)
6. P57, P601 SEE SHT 4 (2308011)
7. AP3 SEE SHT 10 (2308011)
8. LSW 7 & LSW 8, P116, J116 SEE SHT 8

NOTE 9
P116 & J116 (SHT 8)
P183 & J183 (SHT 7)
P184 & J184 (SHT 7)
P185 & J185 SHT 18
P186 & J186 (SHT 18)
P189 & J189 (SHT 15)

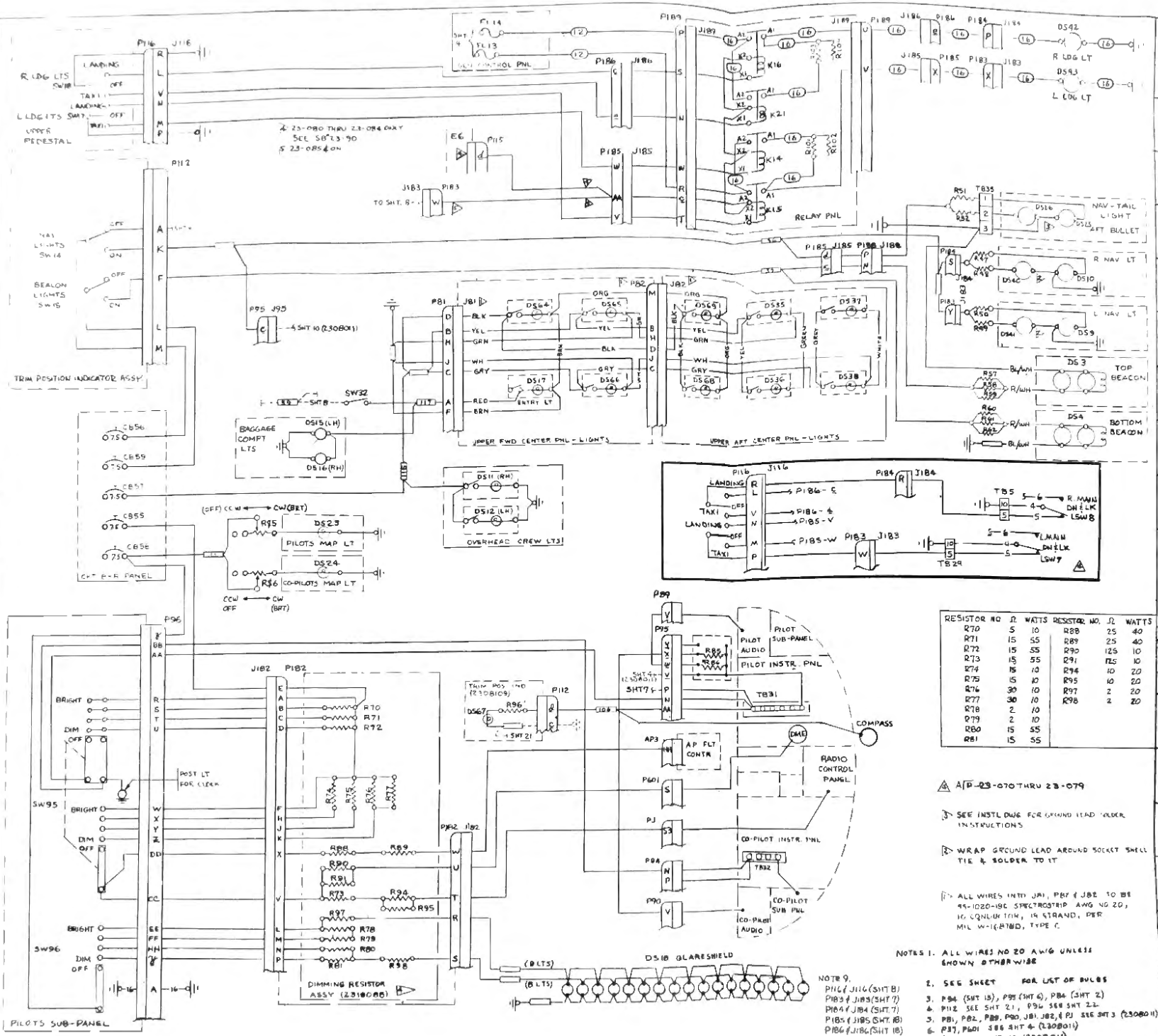

RESISTOR NO	Ω	WATTS	RESISTOR NO.	Ω	WATTS
R70	5	10	R88	25	40
R71	15	55	R89	25	40
R72	15	55	R90	125	10
R73	15	55	R91	125	10
R74	15	10	R94	10	20
R75	15	10	R95	10	20
R76	30	10	R97	2	20
R77	30	10	R98	2	20
R78	2	10			
R79	2	10			
R80	15	55			
R81	15	55			

⚠ A (P-23-070 THRU 23-079

SEE INSTL DWG FOR GROUND LEAD SOLDER INSTRUCTIONS

WRAP GROUND LEAD AROUND SOCKET SHELL TIE & SOLDER TO IT

ALL WIRES INTO J81, P87 & J82 TO BE 55-1020-19C SPECTROSTRIP AWG NO 20, 10 CONDUCTOR, IN STRAND, PER MIL-W-(81381, TYPE C

NOTE 9.
P116 / J116 (SHT 8)
P183 / J183 (SHT 7)
P184 / J184 (SHT. 7)
P185 / J185 (SHT. 18)
P186 / J186 (SHT 18)
P189 / J189 (SHT. 19)
P112 / J112 (SHT 21)

NOTES 1. ALL WIRES NO 20 AWG UNLESS SHOWN OTHERWISE

2. SEE SHEET FOR LIST OF BULBS
3. P84 (SHT 15), P95 (SHT 6), P84 (SHT 2)
4. P112 SEE SHT 21, P96 SEE SHT 22
5. P81, P82, P89, P90, J81, J82, & PJ SEE SHT 3 (2308011)
6. P87, P601 SEE SHT 4 (2308011)
7. AP3 SEE SHT 10 (2308011)
8. P116, J116 SEE SHEET 8.

SYMBOL	PART NUMBER	NAME	VENDOR	INSTAL DWG
R101	ORSS 1/2Ω	RESISTOR (5W)	TRU-OHM	2313354
SW32	575	SWITCH - OVERHEAD DOME	LEA-RON	2313311
SW96	2314111-2	SWITCH - FLOOD LTS DIMMING	-	2314091
R102	ORSS 1/2Ω	RESISTOR (5W)	TRU-OHM	2313354
R103	ORSS 1/2Ω	RESISTOR (5W)	TRU-OHM	2313354
SW95	2314111-1	SWITCH - INSTR PNL DIMMING		2314091
SW17	MST-10SE	SWITCH - LDG L	ALCO	2315130
SW18	MST-10SE	SWITCH - LDG R	ALCO	2315130
SW15	T1003	SWITCH - BCN	C-C	2314112
SW16	T1003	SWITCH - NAV	C-C	2310-12
P188	$801-ST$NL	PLUG	-	PER MC
J188	$801 GFPMR	RECEPTACLE	-	PER MD
P182	$801-7TPOR	PLUG	-	PER MD
J182	$801-BFSNL	RECEPTACLE	-	PER MC
K16	AN3350-1	RELAY - R. LDG.	—	2313354
K15	AN3350-1	RELAY - L. LDG	—	2313354
K14	AN3350-1	RELAY - TAXI	—	2313354
P96	(REF SHT 22)			
K21	AN 3350-1	RELAY-TAXI	—	2313354
R104	ORSS-(1.2Ω)	RESISTOR (55W)	TRU-OHM	2313454
R56	XRS251	POT-CO-PILOTS MAP LT(50Ω,12W)	TRU-OHM	2313311
R96	HS-10	RESISTOR - 47Ω 3 WATT	DALE	PER M/D
R85,86, R60,61,62	MOR-10-5	RESISTOR - MOLD ±5% 2107, RESISTOR - BOTTOM BEACON-5Ω 10W	3 MM TRU-OHM	2318080 2318070
R57,58,59	MOR-10-5	RES STOR - TOP BEACON-5Ω 10W	TRU-OHM	2318000
R52	MOR 20-10	RESISTOR - NAV TAIL 20Ω 20W	TRU-OHM	2331018
R51	MOR 20-10	RESISTOR - NAUTAIL 20Ω 20W	TRU-OHM	2331018
R50	MOR 20-5	RESISTOR - NAV L 5Ω 20W	TRU-OHM	2325062
R49	MOR 20-5	RESISTOR - NAV L 5Ω 20W	TRU-OHM	2325062
R46	MOR 20-5	RESISTOR - NAV R 5Ω 20W	TRU-OHM	2325062
R47	MOR 20-5	RESISTOR - NAV R 5Ω 20W	TRU-OHM	2325062
DS66	10-0115-3	LIGHT - CABIN READING	GRIMES	2314078
DS38	10-0115-3	LIGHT - CABIN READING	GRIMES	2314078
DS37	10-0115-4	LIGHT - CABIN READING	GRIMES	2314078
DS36	10-0115-3	LIGHT - CABIN READING	GRIMES	2314078
DS35	10-0115-4	LIGHT - CABIN READING	GRIMES	2314078
DS43	D7585-4580	LANDING LIGHT L	GRIMES	2348030
DS42	D7585-4580	LANDING LIGHT R	GRIMES	2348030
DS41	60-0366-1	LIGHT-NAV L (A7512-24 BULB)	GRIMES	2325062
DS40	60-0366-1	LIGHT-NAV R (A7512-24 BULB)	GRIMES	2325062
DS 26	11-240XT-6	LT-NAV TAIL(BULLET) WITH 1683 BULB	LEECRAFT	2331018
DS 25	11-240XT-6	LT-NAV TAIL(BULLET) WITH 1683 BULB	LEECRAFT	2331018
DS24	15-0070-1	LIGHT - CO-PILOTS MAP (305 BULB)	GRIMES	2313311
DS23	15-0070-1	LIGHT - PILOTS MAP (305 BULB)	GRIMES	2313311
DS66	10-0115-3	LIGHT - CABIN READING	GRIMES	2314078
DS59	10-0115-4	LIGHT - CABIN READING	GRIMES	2314078
DS64	10-0115-4	LIGHT - CABIN READING	GRIMES	2314078
DS65	10-0115-4	LIGHT - CABIN READING	GRIMES	2314078
DS18	7-01 (1 REQD)	LIGHT - GLARESHIELD (W/ 3-338 LB)	LEECRAFT	2313201
DS17	10-0115-3	LIGHT - DOOR OVERHEAD	GRIMES	2314078
DS16	15-0070-1	LIGHT - BAGGAGE COMP., RH	GRIMES	2313154
DS15	15-0070-1	LIGHT - BAGGAGE COMP., LH	GRIMES	2313154
R95	XRS251	POT-PILOTS MAP LT (50Ω,12.5W)	TRU-OHM	2313311
DS12	10-0115-4	LIGHT - CREW OVERHEAD, LH	GRIMES	2313311
DS11	10-0115-3	LIGHT - CREW OVERHEAD, RH	GRIMES	2313311
DS10	60-0366-1	LIGHT - NAV R (A7512-24 BULB)	GRIMES	2325062
DS9	60-0366-1	LIGHT - NAV L (A7512-24 BULB)	GRIMES	2325062
DS67	MS90283-1	LIGHT - PEDESTAL (WITH 313 BULB)	—	2313130
DS4	40-0100-1	LIGHT - BEACON (BOTTOM)	GRIMES	2318000
DS3	40-0100-3	LIGHT - BEACON (TOP)	GRIMES	2318072
FL13 FL14	M$28937-20	CURRENT LIMITER		
CB59	41-2-814-LN2-4080(10A)	CKT BKR - BCN		2318380
CB58		CKT BKR - FLOOD		2310350
CB57		CKT BKR - CABIN		
CB56		CKT BKR - NAV		
CB55	41-2-814-LN2-4080(25A)	CKT BKR - INST	ETA	2318360

LEAR-JET P.O. BOX 1288 WICHITA, KANSAS

	NAME	DATE
DRAWN	HERMAN	4-2-63
GROUP	OAKLEY	4-2-63
CHECK		4-8-63
STRESS		
PROJ.		4-22-63

TITLE: WIRING DIAGRAM - LIGHTING

DWG NO. 2308000 A

SCALE NONE | 1-15-66 | SHEET 19.14 OF

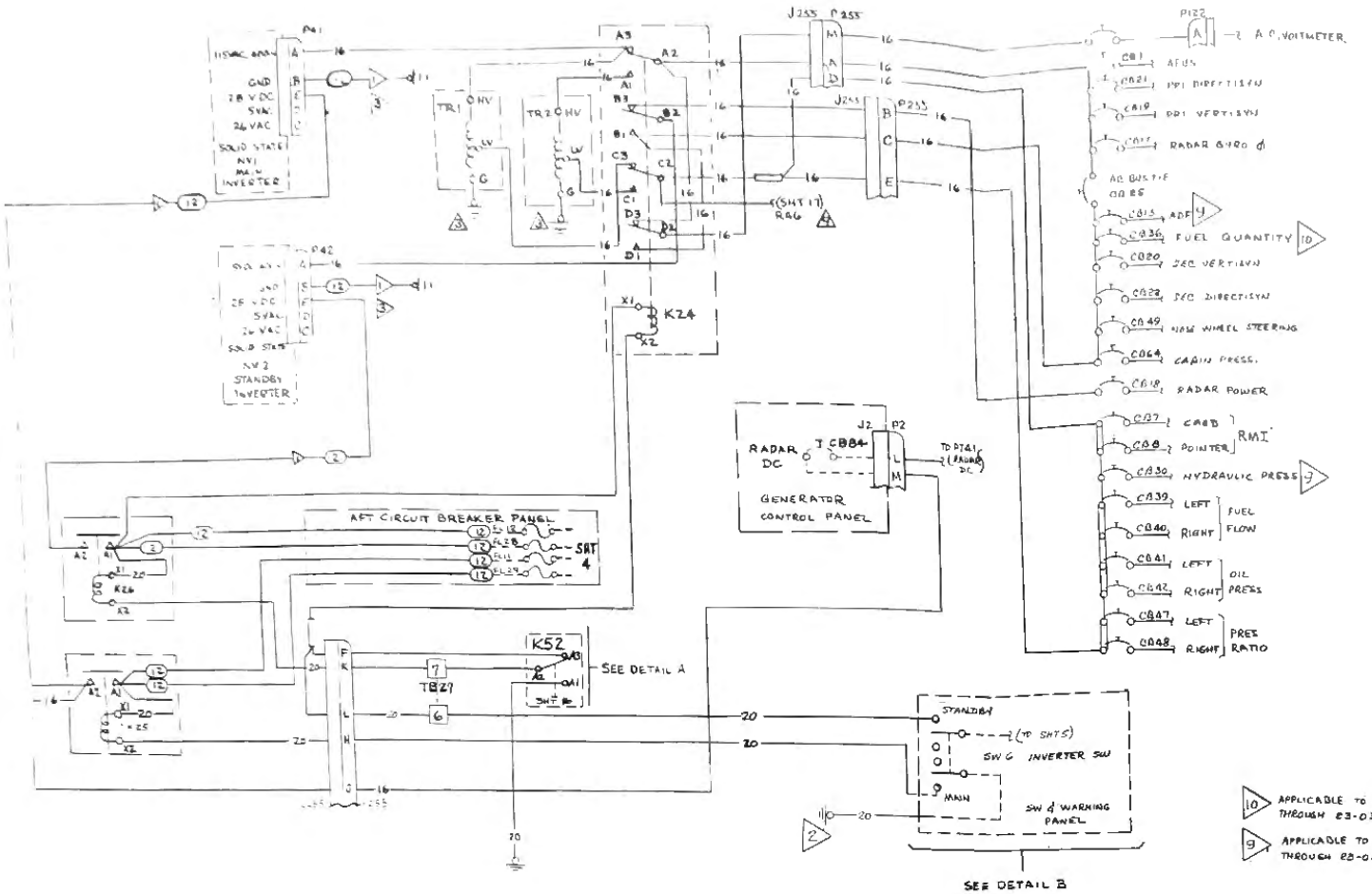

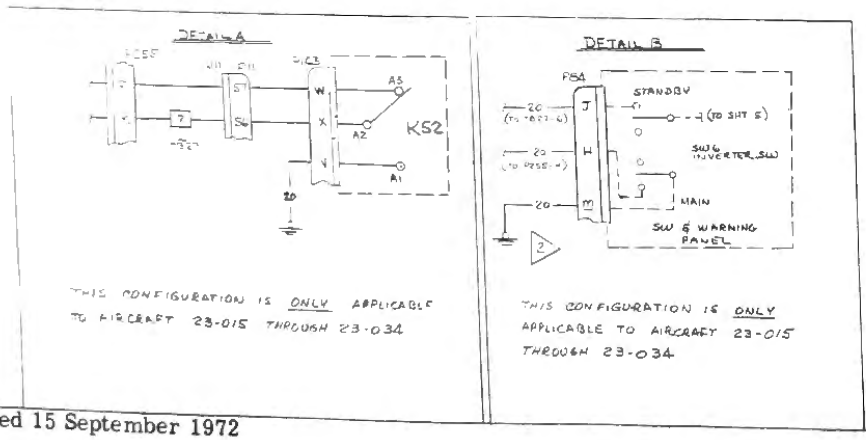

10 APPLICABLE TO AIRCRAFT 23-015 THROUGH 23-034 ONLY.

9 APPLICABLE TO AIRCRAFT 23-003 THROUGH 23-014 ONLY

3 THIS WIRE MUST BE ATTACHED TO A GND STUD THAT DOES NOT CONTAIN ANY OTHER WIRE SHOWN ON THIS SHT.

2 DO NOT ATTACH GROUND TO SAME GROUND STUD OF PITCH TRIM CKT.

1 ALL WIRES WITH THIS FLAG TO BE AS SHORT AS POSSIBLE - MAXIMUM 36 INCHES
DO NOT ATTACH GND WIRES FROM NV1 TO SAME GND STUD AS NV2

SYMBOL	PART NUMBER	NAME	VENDOR	INST DWG
TR1	1930-0	TRANSFORMER - MAIN	PRECISION	
TR 2	1930-0	TRANSFORMER-STANDBY	PRECISION	
SW6	08020K10	SWITCH - INVERTER	C-H	
CB84	(SEE SHT 3 2308011)			
P42	MS 3106A22-12S	PLUG		2381373
	MS 3057-12B	CABLE CLAMP		
	AN 3420-12A	SLEEVE		
	AN 3420-8A	SLEEVE		
P41	MS3106A22-12S	PLUG		
	MS3057-12B	CABLE CLAMP		
	AN3420-12A	SLEEVE		
	AN 3420-8A	SLEEVE		
NV2	SCR 750 A	INVERTER - STANDBY	LEAR	
NV1	SCR 750 A	INVERTER - MAIN	LEAR	2381373
K52	(SEE SHT 16)			
K26	AN3350-1	RELAY - SEC INV PWR		
K25	AN3350-1	RELAY - PRI INV PWR		
K24	5402-1	RELAY - A C OUTPUT		
FL 28	M8 28937-50	CURRENT LIMITER		2381376
FL 12		CURRENT LIMITER		
FL 11		CURRENT LIMITER		2381376
FL 29		CURRENT LIMITER		

LEAR-JET

PETE TORRES 10/18/66

WIRING DIAGRAM
AC POWER

DWG NO 2308000 A

18.00

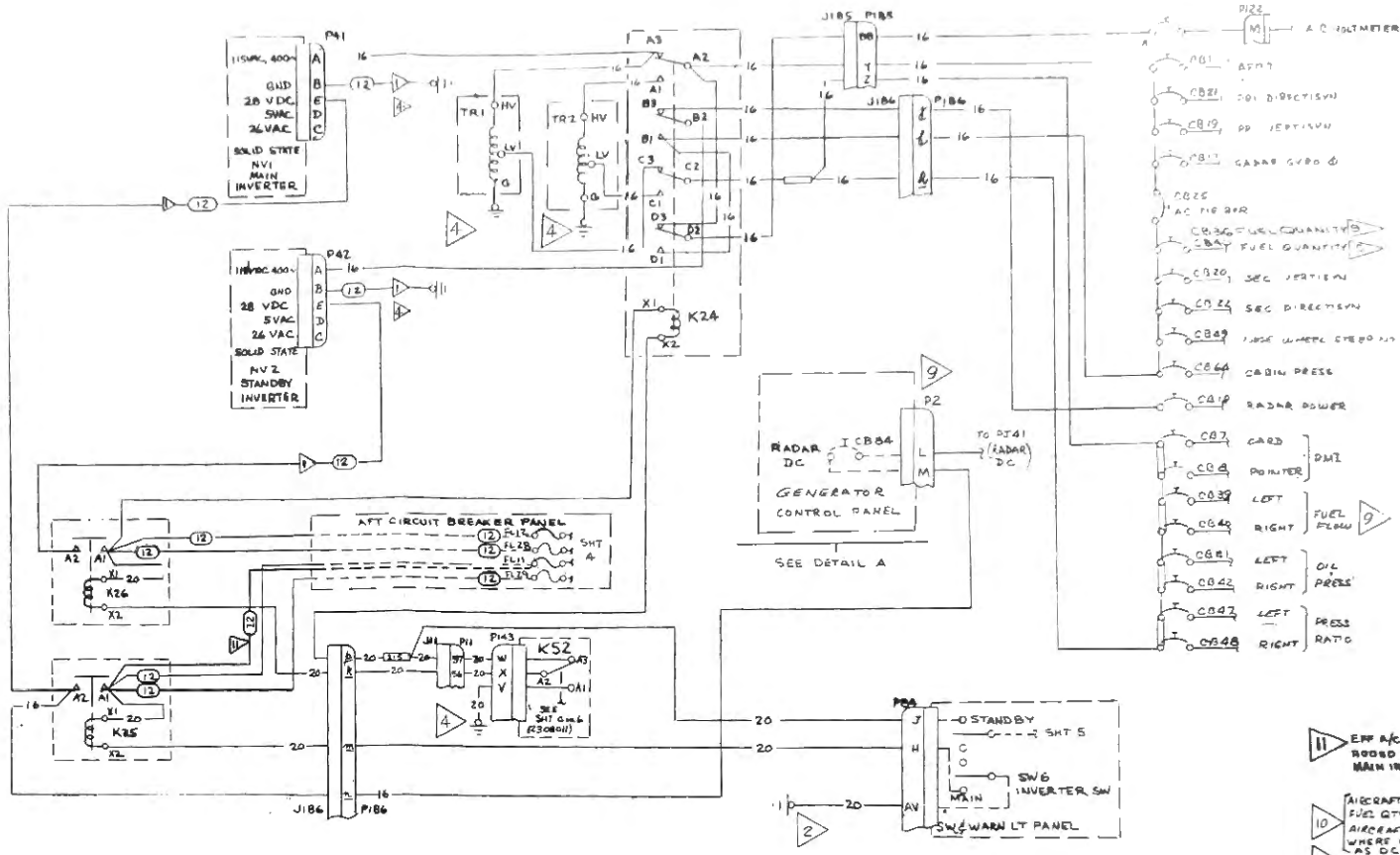

TR1	1930-0	TRANSFORMER - MAIN	PRECISION	
TR2	1930-0	TRANSFORMER-STANDBY	PRECISION	
SW6	BB22DK16	SWITCH - INVERTER	C-H	
P11	$804-22 TPCL			
J11	$804-38 FPOL			
P42	MS 3106A 22-12S	PLUG		2381373
	MS 3057-2B	CABLE-CLAMP		
	AN 3420-12A	SLEEVE		
	AN 3420-8A	SLEEVE		
P41	MS3106A22-12S	PLUG		
	MS3057-12B	CABLE CLAMP		
	AN 3420-12A	SLEEVE		
	AN 3420-8A	SLEEVE		
P186	$803-37TSNR	PLUG		
INV2	SCR 750 A	INVERTER - STANDBY	LEAR	
INV1	SCR 750 A	INVERTER - MAIN	LEAR	238 373
J186	$803-38 FPOL	RECPT		
J185	$803-24 FPOR	RECPT		
K26	AN3350-1	RELAY - SEC INV PWR		REF
K25	AN3350-1	RELAY - PRI INV PWR		REF
K24	3402-1	RELAY AC OUTPUT		REF
P185	$803-25TSNL	PLUG		
FL28 FL12	M$28937-50	CURRENT LIMITER CURRENT LIMITER		2381376
FL11 FL29	M$28937-50	CURRENT LIMITER CURRENT LIMITER		2381376
SYMBOL	PART NUMBER	NAME	VENDOR	INST DWG

LEAR-JET

WIRING DIAGRAM - AC POWER -

PETE TORRES 10/16/66

2308000 A

DETAIL A

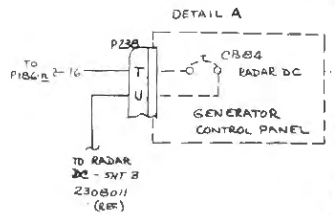

THIS CONFIGURATION IS ONLY APPLICABLE TO AIRCRAFT 23-070 THROUGH 23-099

11 EFF A/C 23-070 THRU 23-099, ROUTED WIRE FROM PL11 TO MAIN INVERTER.

10 AIRCRAFT 23-070 THROUGH 23-099 FUEL QTY IS CB40
AIRCRAFT 23-090 THROUGH 23-099 WHERE FUEL QTY IS 28VDC, RETURN AS DC

9 APPLICABLE TO AIRCRAFT 23-035 THROUGH 23-069 ONLY

4 THIS WIRE MUST BE ATTACHED TO A GND STUD THAT DOES CONTAIN ANY OTHER WIRE SHOWN ON THIS SHEET

2 DO NOT ATTACH TO SAME GND STUD AS WIRE FROM P84 (E)

1 ALL WIRES WITH THIS FLAG TO BE AS SHORT AS POSSIBLE - MAXIMUM OF 36 INCHES - DO NOT ATTACH GND WIRES FROM INV1 TO SAME GND STUD AS INV2

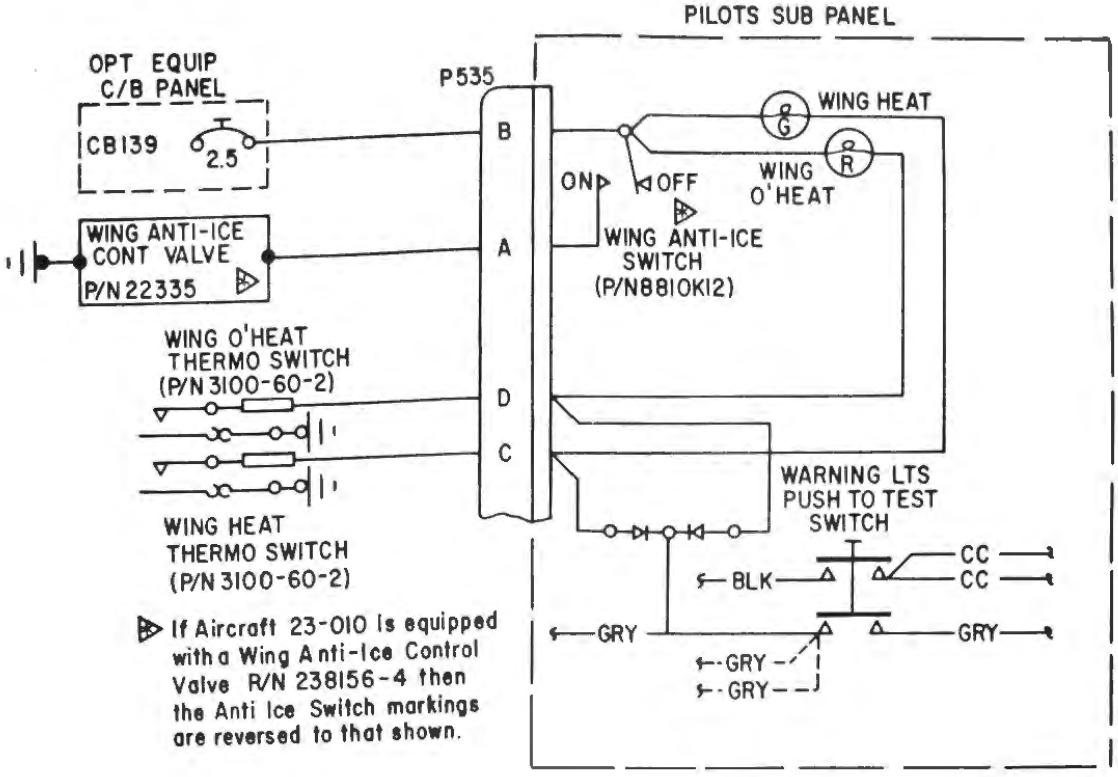

AIRCRAFT 23-003 THRU 23-014

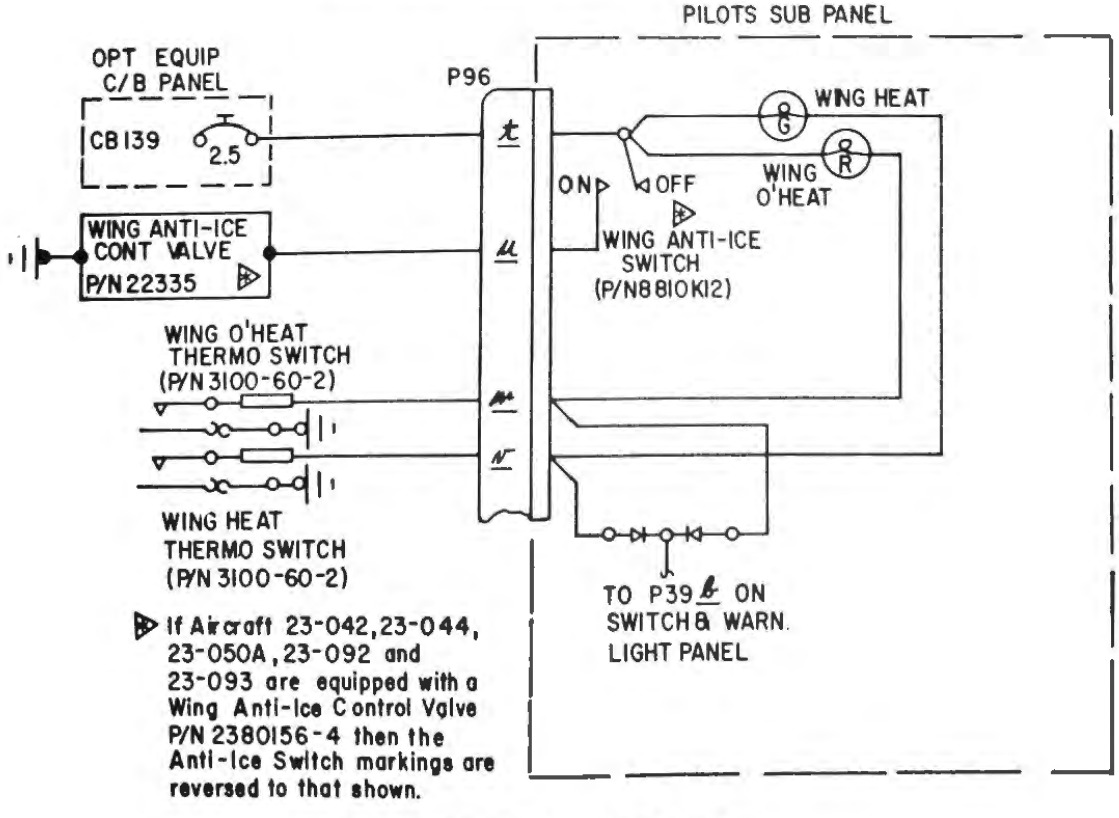

AIRCRAFT 23-015 THRU 23-099

WIRING DIAGRAM - WING ANTI-ICE SYSTEM

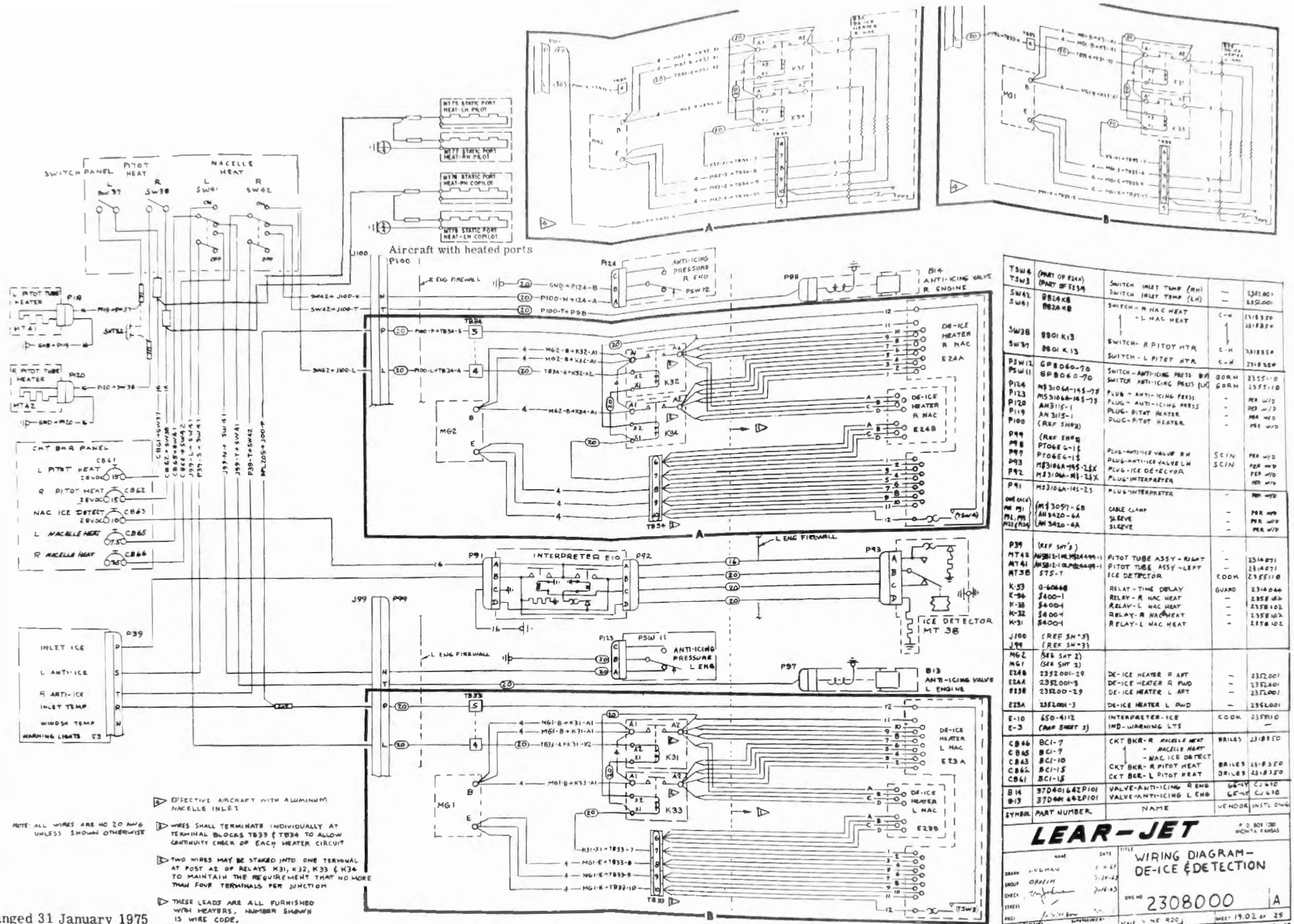

NOTE: ALL WIRES ARE NO 20 AWG UNLESS SHOWN OTHERWISE

A EFFECTIVE AIRCRAFT WITH ALUMINUM NACELLE INLET

B WIRES SHALL TERMINATE INDIVIDUALLY AT TERMINAL BLOCKS TB33 & TB34 TO ALLOW CONTINUITY CHECK OF EACH HEATER CIRCUIT

C TWO WIRES MAY BE STAKED INTO ONE TERMINAL AT POST A2 OF RELAYS K31, K32, K33 & K34 TO MAINTAIN THE REQUIREMENT THAT NO MORE THAN FOUR TERMINALS PER JUNCTION

D THESE LEADS ARE ALL FURNISHED WITH HEATERS, NUMBER SHOWN IS WIRE CODE.

SYMBOL	PART NUMBER	NAME	VENDOR	INSTL DWG
B14	37D401642P101	VALVE-ANTI-ICING R ENG	66-49	CJ 610
B13	37D401642P101	VALVE-ANTI-ICING L ENG	66-49	CJ 610
CB46	BCI-7	CKT BKR-R NACELLE HEAT	BRILES	23183-50
CB65	BCI-7	- NACELLE HEAT		
CB63	BCI-10	- NAC ICE DETECT		
CB62	BCI-15	CKT BKR-R PITOT HEAT	BRILES	23183-50
CB61	BCI-15	CKT BKR-L PITOT HEAT	BRILES	23183-50
E-10	650-4112	INTERPRETER-ICE	COOK	23581-0
E-3	(REF SHEET 3)	IND-WARNING LTS		—
M62	(SEE SHT 2)			
M61	(SEE SHT 2)			
E24B	2352001-29	DE-ICE HEATER R AFT	—	2352001
E24A	2352001-3	DE-ICE HEATER R FWD	—	2352001
E23B	2352001-29	DE-ICE HEATER L AFT	—	2352001
E23A	2352001-3	DE-ICE HEATER L FWD	—	2352001
K-53	G-60668	RELAY - TIME DELAY	GUARD	2314044
K-34	5400-1	RELAY - R NAC HEAT	—	2358102
K-33	5400-1	RELAY-L NAC HEAT	—	2358102
K-32	5400-1	RELAY-R NAC HEAT	—	2358102
K-31	5400-1	RELAY-L NAC HEAT	—	2358102
J100	(REF SH 3)			
J99	(REF SH 3)			
MT42	AN5812-1 OR MS24499-1	PITOT TUBE ASSY-RIGHT	—	2314071
MT41	AN5812-1 OR MS24499-1	PITOT TUBE ASSY-LEFT	—	2314071
MT38	575-1	ICE DETECTOR	COOK	23581-0
P39	(REF SH'S)			
P99				
P98				
P97				
P93		PLUG-ANTI-ICE VALVE RH	SCIN	PER M/D
P92		PLUG-ANTI-ICE VALVE LH	SCIN	PER M/D
P91	MS3106A-14S-2S	PLUG-ICE DETECTOR		PER M/D
P124	MS3106A-14S-7S	PLUG-INTERPRETER		PER M/D
P123	MS3106A-10S-7S			
P120	AN3115-1	PLUG - ANTI-ICING PRESS	-	PER M/D
P119	AN3115-1	PLUG - ANTI-ICING PRESS	-	PER M/D
P100	(REF SH 3)	PLUG-PITOT HEATER	-	PER M/D
P19	(REF SH 3)	PLUG-PITOT HEATER	-	PER M/D
P20	PTO6E6-1S			
SWI2	PTO6E6-1S			
SW41	MS3106A-14S-2SX			
SW42	MS3106A-14S-2SX			
SW37	8824KB	SWITCH - R NAC HEAT - L NAC HEAT	C-H	2318350 2318350
SW38	8824KB			
SW41	8801K13	SWITCH - R PITOT HTR	C-H	2318350
SW42	8801K13	SWITCH - L PITOT HTR	C-H	2318350
PSW12	GP8060-70	SWITCH-ANTI-ICING PRESS RH	GORN	23551-0
PSW11	GP8060-70	SWITCH ANTI-ICING PRESS (LH)	GORN	23551-0
(ONE EACH) MS MS1, MS2 (MS4)	(MS3057-6B (AN3420-6A (AN3420-6A	CABLE CLAMP SLEEVE SLEEVE	- - -	PER M/D PER M/D PER M/D

DRAWN	LUEMAN 1-6-65
GROUP	OBRIEN 5-31-65
CHECK	7-16-65
STRESS	
PROJ	SUPERVISOR SUPERVISOR

LEAR-JET
P.O. BOX 1289 WICHITA KANSAS

TITLE: WIRING DIAGRAM - DE-ICE & DETECTION

DWG NO 2308000 A

SCALE - NONE RDO SHEET 19.02 OF 25

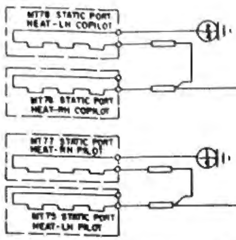

Aircraft with heated ports

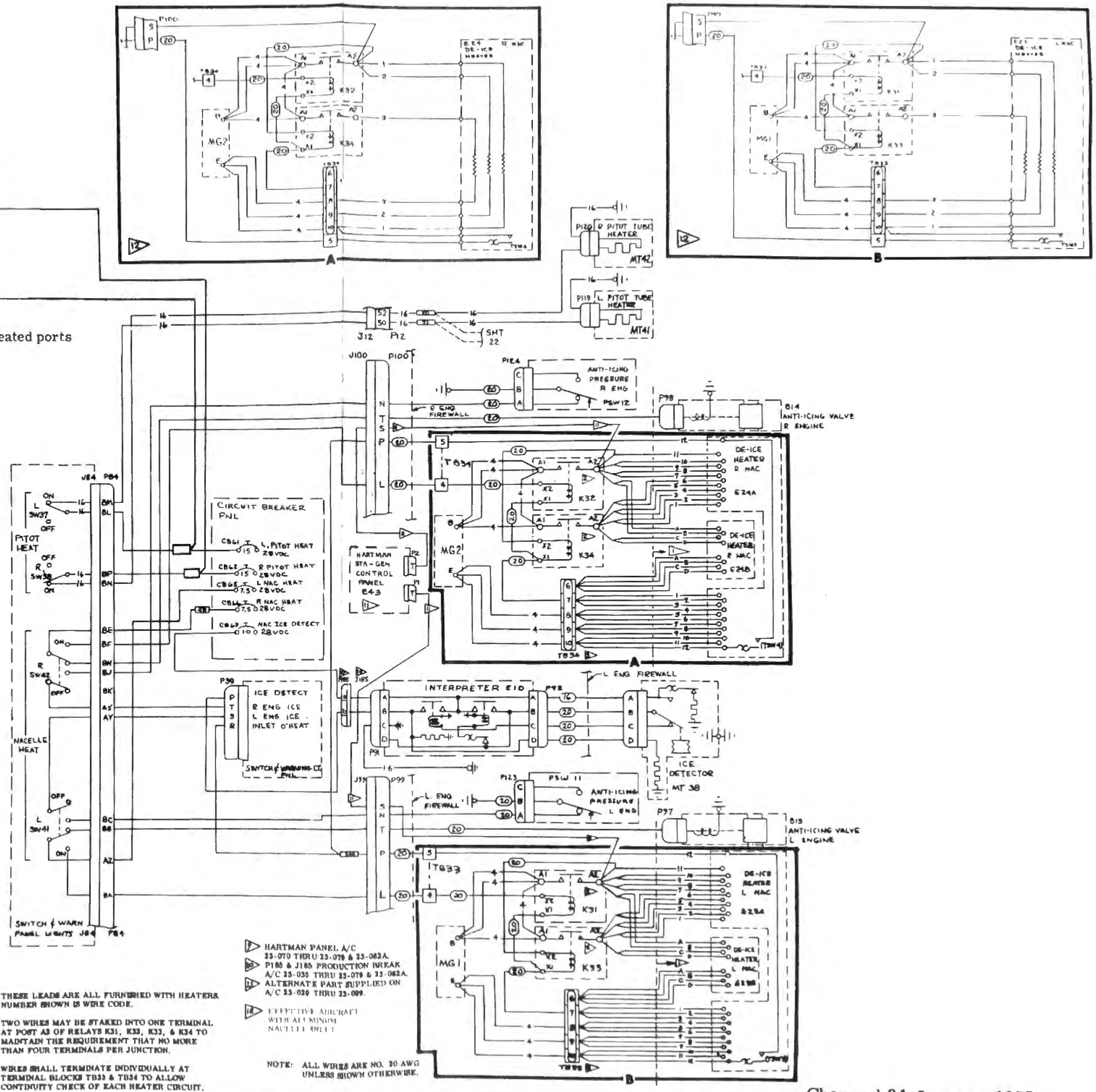

TSW4 TSW3	(PART OF E24A) (PART OF E23A)	Switch Inlet Temp (RH) Switch Inlet Temp (LH)		2352001 2352001
SW42 SW41 SW38 SW37 P97 P98	8824K8 8824K8 8810K12 8810K12 MS3106R8S-1S (3) PT06E8-1S MS3106R8S-1S (3) PT06E8-1S	Switch - R Nac Heat Switch - L Nac Heat Switch - R Pitot Htr Switch - L Pitot Htr Plug - Anti-Ice Valve LH Plug - Anti-Ice Valve RH	C - H C - H C - H C - H SCIN SCIN	2318360 2318360 2318360 2318360 Per W/D Per W/D
P84 PSW12 PSW11	(Ref. SHT 2) GP8060-70 GP8060-70	 Switch - Anti-Icing Press (RH) Switch - Anti-Icing Press (LH)	 GORN GORN	 2355110 2355110
P124 P123 P120 P119 P100 P99 P93 P92 P91 One Each For P91, P92, P93, P123 & P124	MS3106A-14S-7S MS3106A-14S-7S AN3115-1 AN3115-1 (Ref. SHT 3) (Ref. SHT 3) MS3106A-14S-2SX MS3106A-14S-2SX MS3106A-14S-2S MS3057-6B AN3420-6A AN3420-4A	Plug - Anti-Icing Press Plug - Anti-Icing Press Plug - Pitot Heater Plug - Pitot Heater Plug - Ice Detector Plug - Interpreter Plug - Interpreter Cable Clamp Sleeve Sleeve		Per W/D Per W/D Per W/D Per W/D Per W/D Per W/D Per W/D Per W/D Per W/D Per W/D
P12 P39 MT42 MT41 MT38	(Ref. SHT 6) (Ref. SHT 6) AN5812-1 or MS24499-1 AN5812-1 or MS24499-1 575-7	 Pitot Tube Assy - Right Pitot Tube Assy - Left Ice Detector	 COOK	 2314071 2314071 2355110
K-34 K-33 K-32 K-31	S400-1 S400-1 S400-1 S400-1	Relay - R Nac Heat Relay - L Nac Heat Relay - R Nac Heat Relay - L Nac Heat		2358102 2358102 2358102 2358102
J100 J99 J12 J84	(Ref. SHT 3) (Ref. SHT 3) (Ref. SHT 6) (Ref. SHT 2)			
MG2 MG1 E24B E24A E23B E23A	(See SHT 2) (See SHT 2) 2352001-29 2352001-3 2352001-29 2352001-3	 De-Ice Heater R Aft De-Ice Heater R Fwd De-Ice Heater L Aft De-Ice Heater L Fwd		 2352001 2352001 2352001 2352001
E-10 E-3	850-4112 (Ref. SHT 5)	Interpreter - Ice Ind - Warning Lts	COOK	2355110
B13 B-14	37D401642P101 (Part of Engine Assy) (7) 37D401642P101 (Part of Engine Assy) (7)	Valve - Anti-Icing L Eng Valve - Anti-Icing R Eng	GE-LY GE-LY	CJ610 CJ610-4 (12) CJ610 CJ610-4 (12)
SYMBOL	PART NUMBER	NAME	VENDOR	INSTL DWG

LEAR-JET P. O. BOX 1280 WICHITA, KANSAS

TITLE: WIRING DIAGRAM – DE-ICE & DETECTION

2308000 A

SCALE NONE SHEET 8 OF 7

(1) THESE LEADS ARE ALL FURNISHED WITH HEATERS. NUMBER SHOWN IS WIRE CODE.

(2) TWO WIRES MAY BE STAKED INTO ONE TERMINAL AT POST A2 OF RELAYS K31, K32, K33, & K34 TO MAINTAIN THE REQUIREMENT THAT NO MORE THAN FOUR TERMINALS PER JUNCTION.

(3) WIRES SHALL TERMINATE INDIVIDUALLY AT TERMINAL BLOCKS TB33 & TB34 TO ALLOW CONTINUITY CHECK OF EACH HEATER CIRCUIT.

(7) HARTMAN PANEL A/C 23-070 THRU 23-079 & 23-082A.

(10) P185 & J185 PRODUCTION BREAK A/C 23-035 THRU 23-079 & 23-082A.

(11) ALTERNATE PART SUPPLIED ON A/C 23-020 THRU 23-099.

(12) EFFECTIVE AIRCRAFT WITH ALUMINUM NACELLE INLET

NOTE: ALL WIRES ARE NO. 20 AWG UNLESS SHOWN OTHERWISE.

Changed 31 January 1975

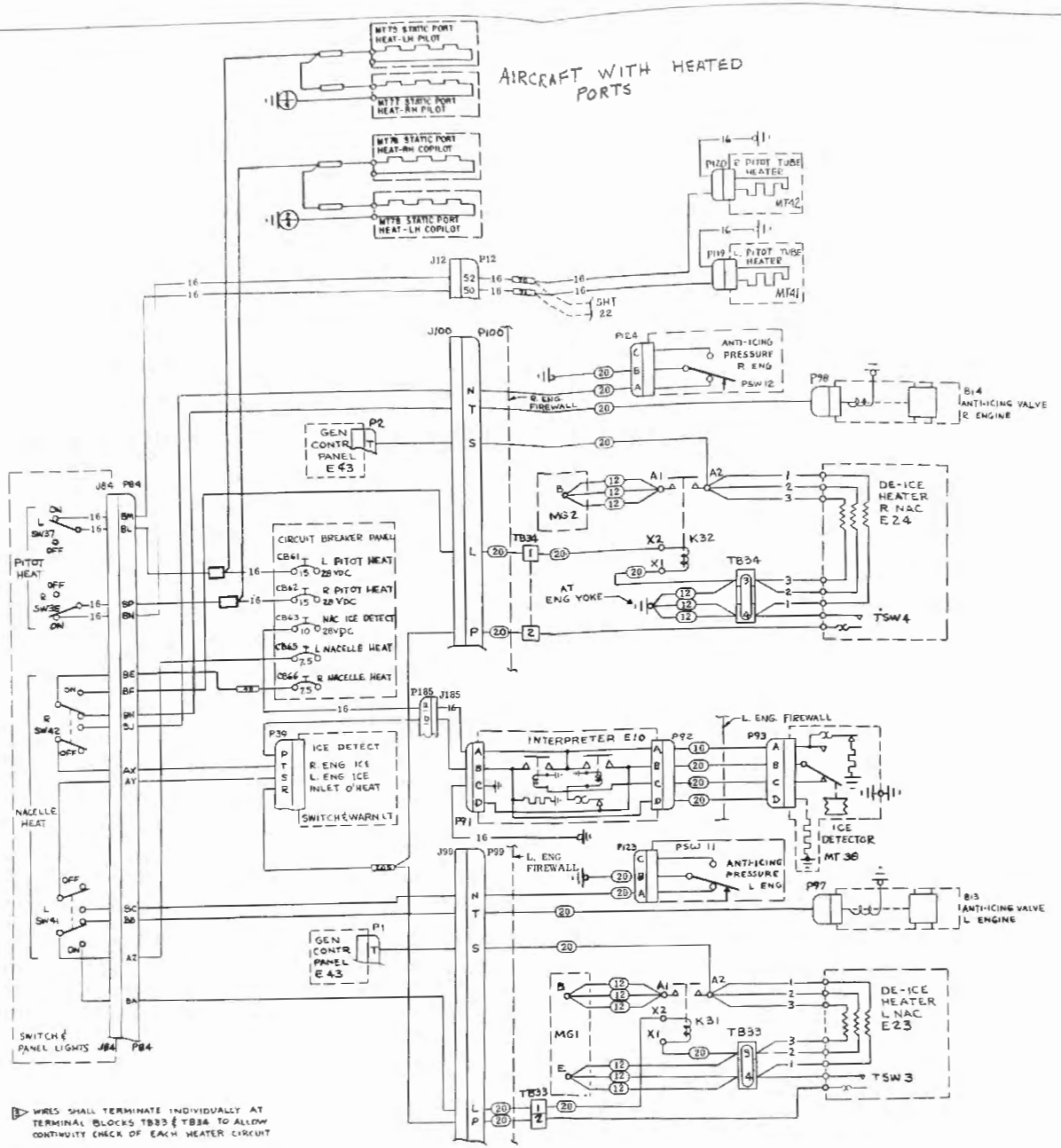

TSW4	(PART OF E24)	SWITCH - INLET TEMP (R)	-	2318370
TSW3	(PART OF E43)	SWITCH - INLET TEMP (L)	-	2318370
SW42	8824K8	SWITCH - R NAC HEAT	C-H	2318370
SW41	8824K8	SWITCH - L NAC HEAT	C-H	2318370
SW38	8810K12	SWITCH - R PITOT HTR	C-H	2318370
SW37	8810K12	SWITCH - L PITOT HTR	C-H	2318370
P1	(SEE SHT 2)			
P2	(SEE SHT 2)			
P84	(REF SHT 2)			
PSW12	GP8060-70	SWITCH - ANTI-ICING PRESS (R)	GORN	2355110
PSW11	GP8060-70	SWITCH - ANTI-ICING PRESS (L)	GORN	2355110
P124	MS3106A 14S-7S	PLUG - ANTI-ICING PRESS	-	PER W/D
P123	MS3106A 14S-7S	PLUG - ANTI-ICING PRESS	-	PER W/D
P120	AN3115-1	PLUG - PITOT HEATER	-	PER W/D
P119	AN3115-1	PLUG - PITOT HEATER	-	PER W/D
P100	(REF SHT 3)			
P98	MS3106B8S-1S	PLUG - ANTI-ICE VALVE RH	-	PER W/D
P97	MS3106B8S-1S	PLUG - ANTI-ICE VALVE LH	-	PER W/D
P93	MS3106A-14S-2SX	PLUG - ICE DETECTOR	-	PER W/D
P92	MS3106A-14S-2SX	PLUG INTERPRETER	-	PER W/D
P91	MS3106A-14S-2S	PLUG - INTERPRETER	-	PER W/D
ONE EACH FOR P91, P92, P93 & P124	(MS3057-6B AN3420-6A AN3420-4A	CABLE CLAMP SLEEVE SLEEVE	- - -	PER W/D PER W/D PER W/D
P12	(REF SHT 4)			
P39	(REF SHT 6)			
MT42	AN5812-1 OR MS24499-1	PITOT TUBE ASSY - RIGHT	-	2314071
MT41	AN5812-1 OR MS24499-1	PITOT TUBE ASSY - LEFT	-	2314071
MT38	575-7	ICE DETECTOR	COOK	2355110
K-32	5400-1	RELAY - R NAC HEAT	-	2358102
K-31	5400-1	RELAY - L NAC HEAT	-	2358102
J100	(REF SHT 3)			
J99	(REF SHT 3)			
J12	(REF SHT 4)			
J84	(REF SHT 5)			
MG2	(SEE SHT 2)			
MG1	(SEE SHT 2)			
E43	(SEE SHT 2)			
E24	6060	DE-ICE HEATER R NAC	COX	2352018
E23	6060	DE-ICE HEATER L NAC	COX	2352018
E-10	650-4112	INTERPRETER - ICE	COOK	2355110
E-3	(REF SHEET 5)	IND - WARNING LTS		
CB66	4I-2-5/14-LNZ-1608D1 (7.5A)	CKT BKR - R NACELLE HEAT	ETA	2318350
CB65	4I-2-5/14-LNZ-1608D1 (7.5A)	CKT BKR - L NACELLE HEAT		
CB63	4I-2-5/14-LNZ (10 A)	CKT BKR - NAC ICE DETECT		
CB62	4I-2-5/14-LNZ (15 A)	CKT BKR - R PITOT HEAT		2318350
CB61	4I-2-5/14-LNZ (15 A)	CKT BKR - L PITOT HEAT	ETA	2318350
J185	(REF SHT 18)			
P185	(REF SHT 18)			
B-14	(PART OF ENG ASSY)	VALVE-ANTI-ICING R ENG	GE-LY	CJ610-4
B13	(PART OF ENG ASSY)	VALVE-ANTI-ICING L ENG	GE-LY	CJ610-4
SYMBOL	PART NUMBER	NAME	VENDOR	INST. DWG

1. WIRES SHALL TERMINATE INDIVIDUALLY AT TERMINAL BLOCKS TB33 & TB34 TO ALLOW CONTINUITY CHECK OF EACH HEATER CIRCUIT
2. SEE USED ON DWG FOR P/N AND VENDOR
3. THESE LEADS ARE ALL FURNISHED WITH HEATERS. NUMBER SHOWN IS WIRE CODE.

NOTE: ALL WIRES ARE NO. 20 AWG UNLESS SHOWN OTHERWISE

LEAR-JET — P. O. BOX 1280 WICHITA, KANSAS

	NAME	DATE
DRAWN	HERMAN	7-14-68
GROUP	OBRIEN	7-30-68
CHECK		7-15-68
STRESS		
PROJ		7-24-68

TITLE: WIRING DIAGRAM - DE-ICE & DETECTION

DWG NO 2308000 A

SCALE NONE | 1-15-68 | SHEET 12.98

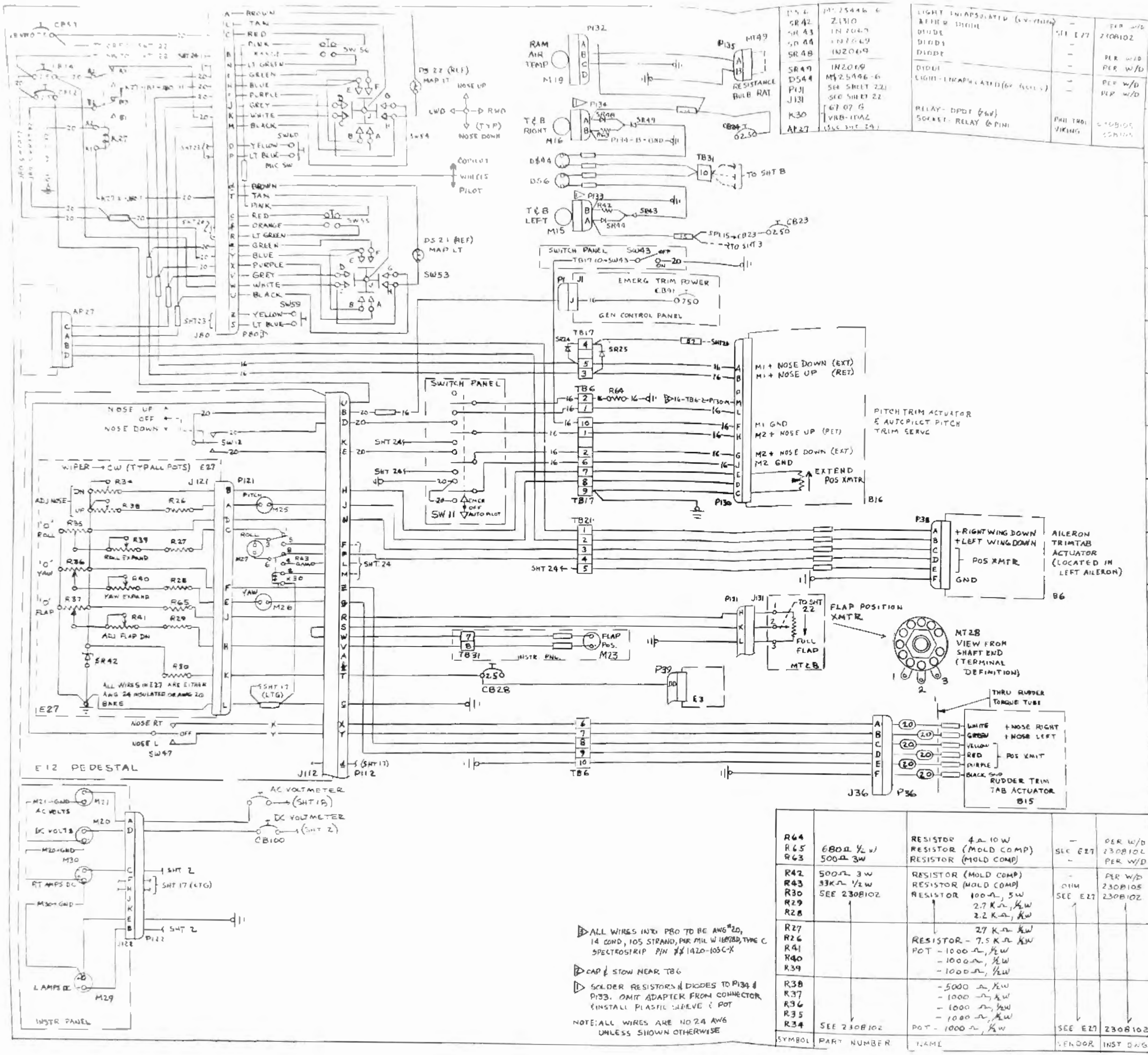

1. ALL WIRES INTO P80 TO BE AWG #20, 14 COND, 105 STRAND, PER MIL W 16878D, TYPE C SPECTROSTRIP P/N ## 1420-105C-X
2. CAP & STOW NEAR TB6
3. SOLDER RESISTORS & DIODES TO P134 & P133. OMIT ADAPTER FROM CONNECTOR & INSTALL PLASTIC SLEEVE & POT

NOTE: ALL WIRES ARE NO 24 AWG UNLESS SHOWN OTHERWISE

SYMBOL	PART NUMBER	NAME	VENDOR	INST DWG
DS6	MS25446-6	LIGHT ENCAPSULATED (6V-YELLOW)	—	
SR42	Z1310	ZENER DIODE	SEE E27	2308102
SR43	IN2069	DIODE	—	
SR44	IN2069	DIODE	—	PER W/D
SR48	IN2069	DIODE	—	PER W/D
SR49	IN2069	DIODE	—	PER W/D
DS44	MS25446-6	LIGHT-ENCAPSULATED (6V YELLOW)	—	PER W/D
P131	SEE SHEET 22			
J131	SEE SHEET 22			
K30	67 07 G	RELAY-DPDT (24V)	PHIL TROL	2308105
	VRB-1DA2	SOCKET-RELAY (8 PIN)	VIKING	2308105
AP27	(SEE SHT 29)			

SYMBOL	PART NUMBER	NAME	VENDOR	INST DWG
J121	MIOP LRN	RECPT (PART OF E12)	WINCH	
P121	MIGS 1/3H19C	PLUG (PART OF E12)	WINCH	
J80	[illegible]	SOCKETS	AMP	PER W/D
	[illegible]	HOUSING		
	[illegible]	JACKSCREW (F)		
	[illegible]	CLAMP		
P80	[illegible] (26 EA)	PINS		
	[illegible]	HOUSING		
	[illegible] (2 EA)	JACKSCREW (M)	AMP	
	[illegible]	CLAMP		
P135	AN3420-4A	SLEEVE		
	MS3106( )12S-3S	PLUG		
	MS3057-4B	CLAMP		
P134	MS3106( )10SL-3S	PLUG		
	AN3420-4A	SLEEVE		
	MS3057-4B	CLAMP		
SW60	MS25089-3A	SWITCH-MIC		PER W/D 2315155
SW59	MS25089-3A	SWITCH-MIC	—	
P33	(SEE SHT 8)			
SW56	C2006	SWITCH-WHEEL MASTER	C-C	
SW55	C2006	SWITCH-WHEEL MASTER	C-C	
SW54	446501	TRIM SWITCH-COPILOT	MA ON	
SW53	446501	TRIM SWITCH-PILOT	MA ON	2315155
J122	126-221	RECPT	AMPH	PER W/D
P122	126-222	PLUG	AMPH	PER W/D
SW47	[illegible] 92	YAW TRIM SW	C-H	2308105
SW43	8801K13	NORMAL PITCH TRIM CUTOFF SW	C-H	2318350
SW12	8911K192	EMERGENCY PITCH TRIM SW	C-H	2308102
SW11	7662K5	PITCH TRIM CONTROL-AFCS & EMER	C-H	2318350
P133	MS3057-4B	CLAMP	—	PER W/D
	MS3106( )10SL-3S	PLUG	—	
	AN3420-4A	SLEEVE	—	
	MS3057-6B	CLAMP	—	
P132	MS3106( )14S-2S	PLUG	—	
	AN3420-4A E-6A	SLEEVE	—	
P130	PT06SE20-16S	PLUG	SCIN	
P112	42781-1 (26 EA)	SOCKETS	AMP	
	201359-1	HOUSING		
	201229-1	CLAMP		
	201388-2 (2 EA)	JACKSCREW (M)	AMP	
P38	AN3420-8A	SLEEVE		
	AN3420-6A	SLEEVE	—	
	MS3106( )16S-1S	PLUG	—	
	MS3057-8B	CLAMP	—	
P36	PT06SE-10-6P	PLUG	SCIN	PER W/D
P1	(REF SHT 2)	PLUG	—	
MT49	MS28034-1	RESISTANCE BULB-RAM AIR TEMP		2312020
MT28	SEE SHT 22			
SR25	IN2069	DIODE	-	PER W/D
SR24	IN2069	DIODE	-	PER W/D
M19	S215-1	RAM AIR TEMP IND		2314050
M16	S202-1	TURN & BANK IND		2314050
M15	S202-1	TURN & BANK IND		2314050
M27	S221-1	ROLL TRIM IND		2308105
M26	S220-1	YAW TRIM IND		2308105
M25	S219-	PITCH TRIM IND		2308105
M23	S216-1	FLAP POSITION IND		2314050
M21	S214-1	VOLTMETER - AC		
M20	S213-1	VOLTMETER - DC		
M30	S211-1	AMMETER - RIGHT DC GEN		
M29	S211-1	AMMETER - LEFT DC GEN		2314050
K27	S401-1	RELAY-PILOT TRIM AUTHORITY		2318502
J112	200512-2	HOUSING	AMP	2308105
	201349-2	PIN HOOD		
	200875-2 (2 EA)	JACKSCREW (F)		
	42980-1 (26 EA)	PINS	AMP	2308105
J36	PT00SE-10-6S	RECPT	SCIN	PER W/D
J1	(REF SHT 2)	PLUG		
CB91	BCI-7	CKT BKR-EMERGENCY PITCH TRIM	BRILES	2318010
CB53	BCI-7	CKT BKR PITCH TRIM	BRILES	2318350
E27	2308107-1	CALIBRATION ASSY-POS IND	—	2315130
E12	2308105-5	POS CONTROL & IND ASSY		2315130
E3	(REF SHT 5)			
CB54	BCI-2	CKT BKR - ROLL TRIM	BRILES	2318350
CB52	BCI-2	CKT BKR - YAW TRIM		
CB28	BCI-2	CKT BKR - FLAP & TAB		
CB24	BCI-2	CKT BKR - T&B-R, RAT		
CB23	BCI-2	CKT BKR - T&B-L, FUEL QTY	BRILES	2318350
B16	6600041	PITCH TRIM ACTUATOR	—	2331530
B15	2380027	YAW TRIM ACTUATOR		2373000
B6	2380027	ROLL TRIM ACTUATOR	AIR-ACC	2324010

SYMBOL	PART NUMBER	NAME	VENDOR	INST DWG
R64		RESISTOR 4Ω 10W	—	PER W/D
R65	680Ω ½W	RESISTOR (MOLD COMP)	SEE E27	2308102
R63	500Ω 3W	RESISTOR (MOLD COMP)	—	PER W/D
R42	500Ω 3W	RESISTOR (MOLD COMP)	-	PER W/D
R43	33KΩ ½W	RESISTOR (MOLD COMP)	OHM	2308105
R30	SEE 2308102	RESISTOR 100Ω, 5W	SEE E27	2308102
R29		2.7 KΩ, ½W		
R28		2.2 KΩ, ½W		
R27		27 KΩ ½W		
R26		RESISTOR - 7.5 KΩ ½W		
R41		POT - 1000Ω, ½W		
R40		- 1000Ω, ½W		
R39		- 1000Ω, ½W		
R38		- 5000 Ω, ½W		
R37		- 1000 Ω, ½W		
R36		- 1000 Ω, ½W		
R35		- 1000 Ω, ½W		
R34	SEE 2308102	POT - 1000 Ω, ½W	SEE E27	2308102

LEAR-JET

P. O. BOX 1280
WICHITA, KANSAS

	NAME	DATE
DRAWN	OPHEIM	9-12-63
GROUP	OPHEIM	8-12-63
CHECK	[illegible]	[illegible]
STRESS		
PROJ	[illegible]	[illegible]

TITLE: WIRING DIAGRAM, TRIM SYSTEMS, T&B, RAT, ELECT QUANTITY, & VR CONTROL

DWG NO 2308000 A

SCALE NONE SHEET 21.03 OF 25

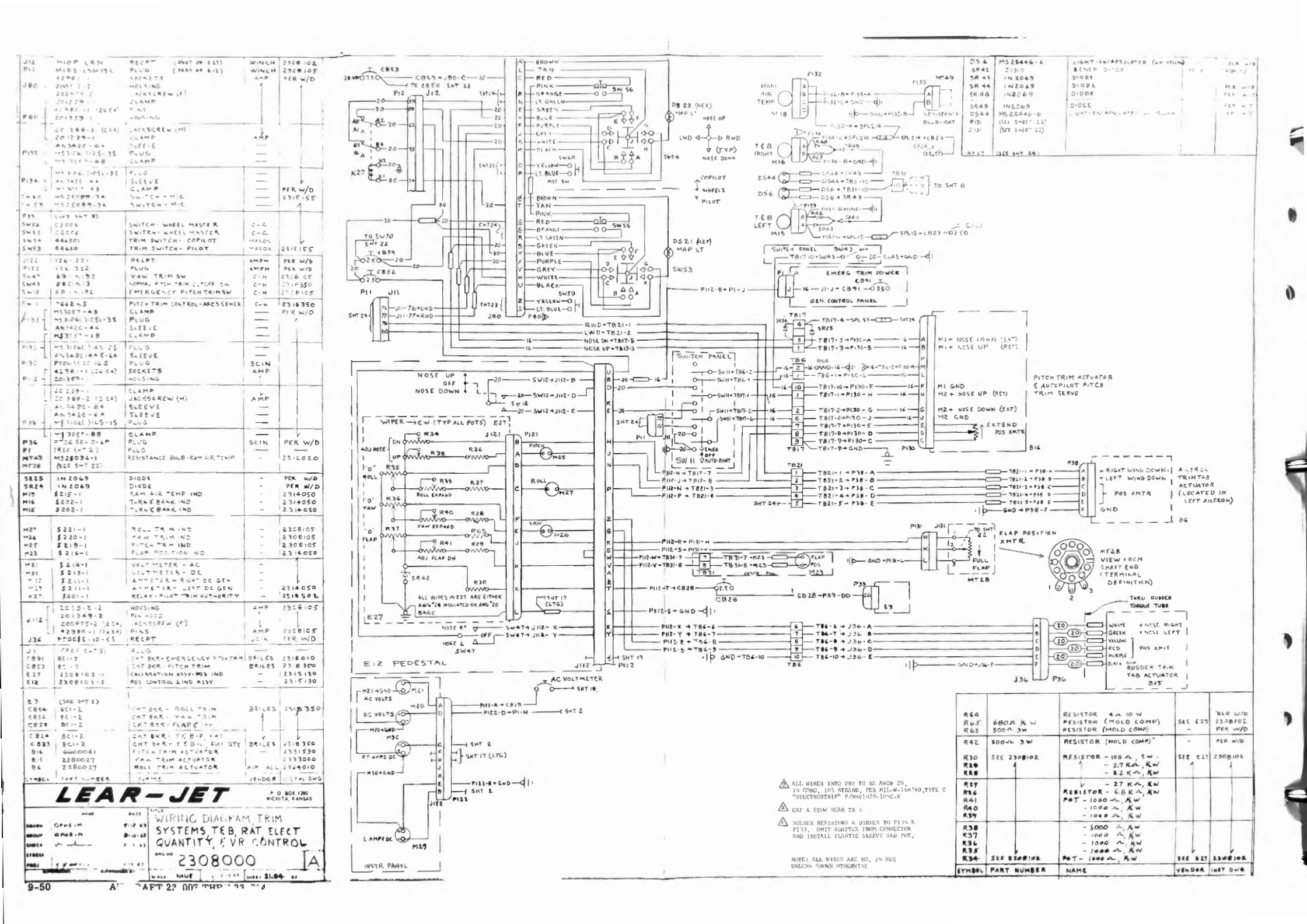
WIRING DIAGRAM, TRIM SYSTEMS, T&B, RAT ELECT QUANTITY, F VR CONTROL
2308000
A
LEAR-JET
P.O. BOX 1280 WICHITA, KANSAS
E12 PEDESTAL
E27
SWITCH PANEL
SW11 (AUTO-TRIM)
EMERG TRIM POWER CB91
GEN. CONTROL PANEL
PITCH TRIM ACTUATOR & AUTOPILOT PITCH TRIM SERVO
AILERON TRIM TAB ACTUATOR (LOCATED IN LEFT AILERON)
FLAP POSITION XMTR
RUDDER TRIM TAB ACTUATOR B15
INSTR. PANEL
THRU RUDDER TORQUE TUBE
NOTE: ALL WIRES ARE NO. 24 AWG UNLESS SHOWN OTHERWISE
ALL WIRES INTO P80 TO BE AWG# 20, 19 COND, 105 STRAND, PER MIL-W-16878D, TYPE C "SPECTROSTRIP" P/N SB1020-10NC-X
CAP & STOW NEAR TB 6
SOLDER RESISTORS & DIODES TO PINS 6 P133. OMIT ADJUSTED TRIM CONNECTOR AND INSTALL PLASTIC SLEEVE AND PUT.

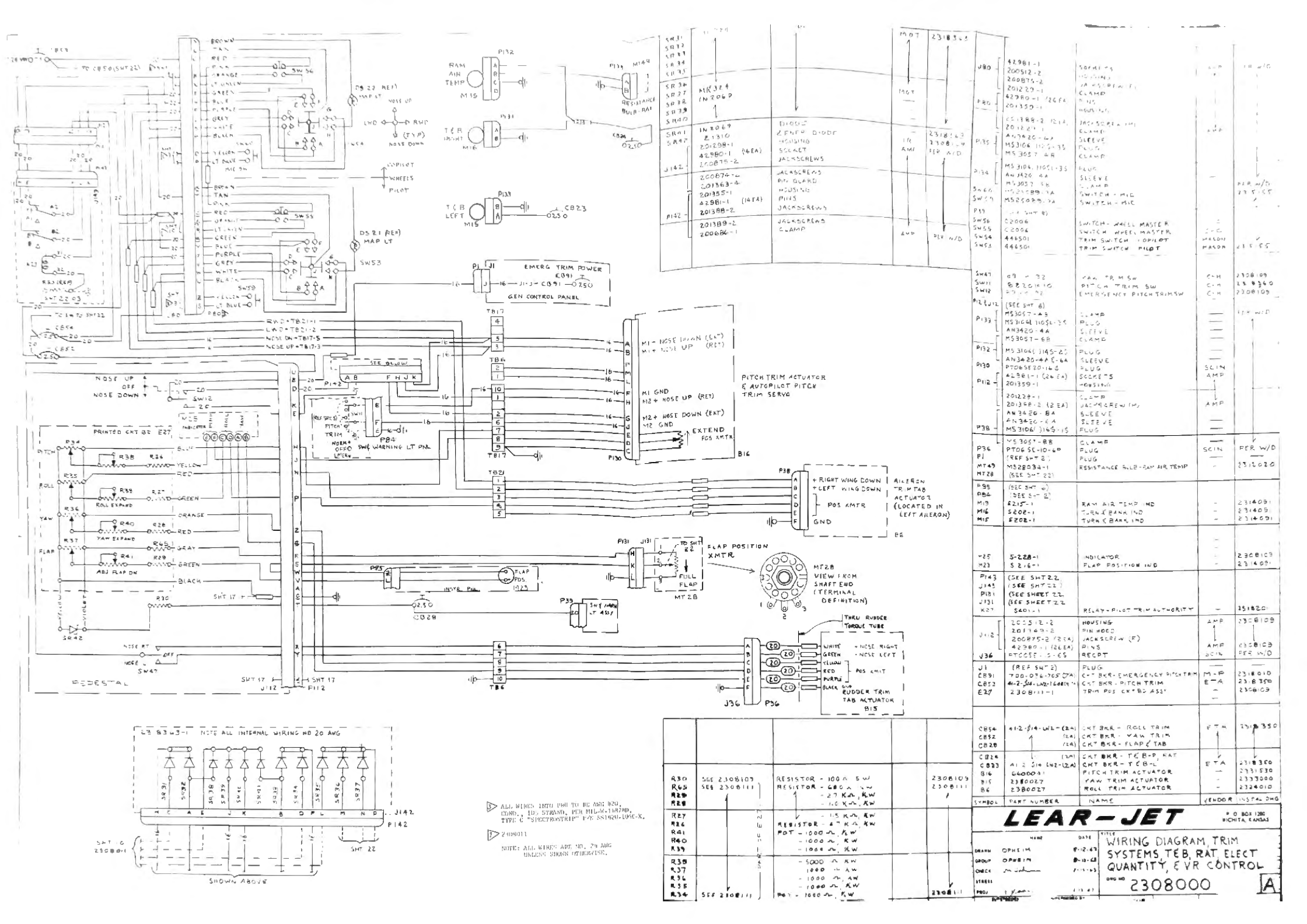

SYMBOL	PART NUMBER	NAME	VENDOR	INSTAL DWG
J80	42981-1	SOCKETS	AMP	78 W/D
	200512-2	HOUSING		
	200875-2	JACKSCREW (F)		
	201229-1	CLAMP		
P80	42980-1 (26EA)	PINS		
	201359-1	HOUSING		
P135	CC1388-2 (2EA)	JACKSCREW (M)		
	201229-1	CLAMP	AMP	
	AN3420-6A	SLEEVE		
	MS3106 (10SL-3S	PLUG		
	MS3057-6A	CLAMP		
P134	MS3106 (10SL-3S	PLUG		
	AN3420-6A	SLEEVE		
	MS3057-6A	CLAMP		PER W/D 23 5155
S4EA	MS25089-3A	SWITCH - MIC		
SW5A	MS25089-3A	SWITCH - MIC		
P39	(SEE SHT 8)			
SW56	C2006	SWITCH - WHEEL MASTER	C-H	
SW55	C2006	SWITCH WHEEL MASTER	C-H	2308109
S454	446501	TRIM SWITCH - COPILOT	MASON	23 8360
SW53	446501	TRIM SWITCH PILOT	MASON	2308109
SW47	69 - 32	YAW TRIM SW	C-H	
SW11	88206410	PITCH TRIM SW	C-H	
SW12	69 - 32	EMERGENCY PITCH TRIMSW	C-H	
P12 & J12	(SEE SHT 8)			PER W/D
P133	MS3057-4A	CLAMP		
	MS3106(10SL-3S	PLUG		
	AN3420-4A	SLEEVE		
	MS3057-6A	CLAMP		
P132	MS3106(14S-2S	PLUG		
P130	AN3420-4A C-6A	SLEEVE	SCIN	
	PT06SE20-16S	PLUG	AMP	
P112	42981-1 (24 EA)	SOCKETS		
	201359-1	HOUSING		
	201229-1	CLAMP		
	201358-2 (2 EA)	JACKSCREW (M)	AMP	
P38	AN3420-8A	SLEEVE		
	AN3420-6A	SLEEVE		
	MS3106( )16S-1S	PLUG		
	MS3057-8A	CLAMP		
P36	PT06SE-10-6P	PLUG	SCIN	PER W/D
P1	(REF SHT 2)	PLUG		
MT49	MS28034-1	RESISTANCE BULB-RAM AIR TEMP	-	23 8020
MT28	(SEE SHT 22)			
P98	(SEE SHT 6)			
P84	(SEE SHT 2)			
M13	5215-1	RAM AIR TEMP IND	-	2314091
M16	5202-1	TURN & BANK IND	-	2314091
M15	5202-1	TURN & BANK IND	-	2314091
M25	5-228-1	INDICATOR	-	2308109
M23	5216-1	FLAP POSITION IND	-	2314091
P143	(SEE SHT 22			
J145	(SEE SHT 22			
P131	(SEE SHEET 22			
J131	(SEE SHEET 22			
K27	5401-1	RELAY-PILOT TRIM AUTHORITY	-	2318201
J142	CC1388-2	HOUSING	AMP	2308109
	201369-2	PIN MOD		
	200875-2 (2EA)	JACKSCREW (F)	AMP	2308108
	42980-1 (26EA)	PINS		
J36	PT06SE-8-6S	RECPT	SCIN	PER W/D
J1	(REF SHT 2)	PLUG		
C891	T00-076-765 (7A)	CKT BKR - EMERGENCY PITCH TRIM	M-P	2318010
C853	4-2-5A-LW2-16081	CKT BKR - PITCH TRIM	E-TA	23 8350
E27	2308111-1	TRIM POS CKT BD ASS'Y	-	2308103
C854	41-2-5A-LW2-(2A)	CKT BKR - ROLL TRIM	E-TA	23 8350
C852	(2A)	CKT BKR - YAW TRIM		
C828	(2A)	CKT BKR - FLAP & TAB		
C826	(2A)	CKT BKR - T C B-P, RAT	E-TA	23 8350
C833	41-2-5A-LW2-(2A)	CKT BKR - T C B-L		2318350
B16	660003-1	PITCH TRIM ACTUATOR	-	2331530
B15	2380027	YAW TRIM ACTUATOR	-	2333000
B6	2380027	ROLL TRIM ACTUATOR	-	2324010

R30	SEE 2308109	RESISTOR - 100 Ω 5 W	2308109
R65	SEE 2308111	RESISTOR - 680 Ω 1 W	2308111
R29		- 27 KΩ, 1W	
R28		- 1.0 KΩ, 1W	
R27		- 1.5 KΩ, 1W	
R26		RESISTOR - 4.7 KΩ, 1W	
R41		POT - 1000 Ω, 2W	
R40		- 1000 Ω, 1W	
R39		- 1000 Ω, 1W	
R38		- 5000 Ω 1W	
R37		- 1000 Ω 1W	
R36		- 1000 Ω, 1W	
R35		- 1000 Ω, 1W	
R34	SEE 2308111	POT - 1000 Ω, 1W	2308111

LEAR-JET P O BOX 1280 WICHITA, KANSAS

NAME	DATE
DRAWN OPHEIM	8-12-63
GROUP OPHEIM	8-12-63
CHECK	7-15-63
STRESS	
PROJ	

TITLE: WIRING DIAGRAM, TRIM SYSTEMS, T&B, RAT, ELECT QUANTITY, & VR CONTROL

DWG NO 2308000 A

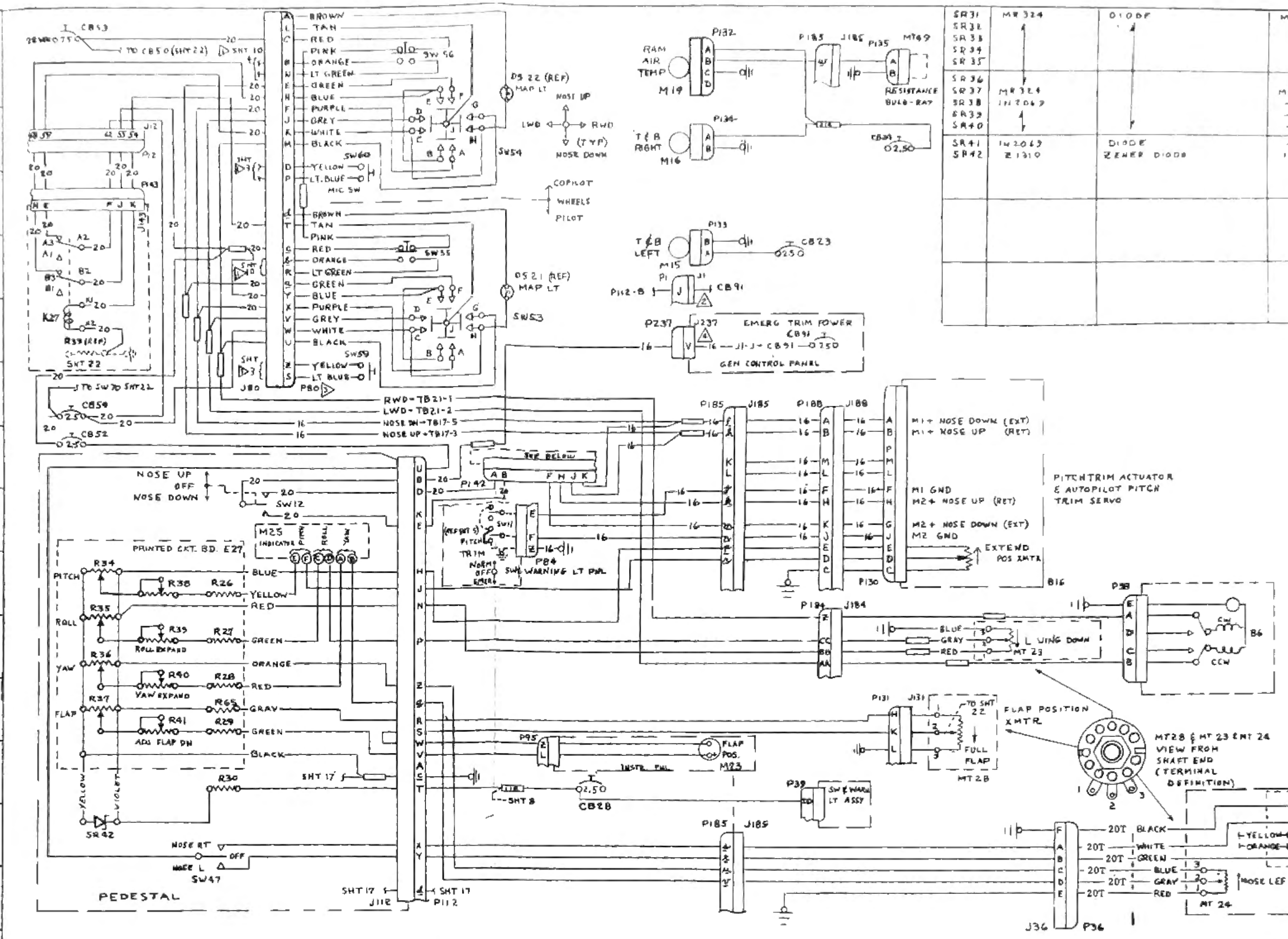

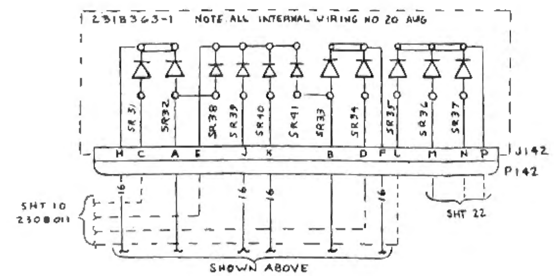

SYMBOL	PART NUMBER	NAME	VENDOR	INSTAL DWG
P237	SEE SHEET 4			
J237	SEE SHEET 4			
P135	AN3420-4A	SLEEVE	—	PER W/D
	MS3106()12S-3S	PLUG	—	
	MS3057-4B	CLAMP	—	
P134	MS3106()10SL-3S	PLUG	—	
	AN3420-4A	SLEEVE	—	
	MS3057-4B	CLAMP	—	PER W/D
SW60	MS25089-3A	SWITCH - MIC	—	2315155
SW59	MS25089-3A	SWITCH - MIC	—	
P98	(SEE SHT 8)			
SW56	C2006	SWITCH - WHEEL MASTER	C-C	
SW55	C2006	SWITCH - WHEEL MASTER	C-C	
SW54	466501	TRIM SWITCH - COPILOT	MASON	
SW53	466501	TRIM SWITCH PILOT	MASON	2315155
SW47	8B1K1R2	YAW TRIM SW	C-H	
SW12	8B1K1R2	PITCH TRIM SW	C-H	
SW47	8B12K13	YAW TRIM SW	C-H	2308112
SW11	8B20R2	PITCH TRIM SW	C-H	2318370
SW12	8B12K13	EMERGENCY PITCH TRIM SW	C-H	2308112
P12 & J12	(SEE SHT 6)			
P133	MS3057-4B	CLAMP	—	PER W/D
	MS3106()10SL-3S	PLUG	—	
	AN3420-4A	SLEEVE	—	
	MS3057-6B	CLAMP	—	
P132	MS3106()14S-2S	PLUG	—	
	AN3420-4A & 6A	SLEEVE	—	
P130	PT06S 20-16S	PLUG	SCIN	
P142	S600-1TSNR	PLUG	—	
P112	S601-1TSNL	PLUG	—	
P80	S801-1TPOL	PLUG	—	
	AN3420-8A	SLEEVE	—	
	AN3420-6A	SLEEVE	—	
P38	MS3106()16S-1S	PLUG	—	
	MS3057-8B	CLAMP	—	
P36	PT06SE-10-6P	PLUG	SCIN	PER W/D
P1	(REF SHT 2)	PLUG	—	
MT49	MS28034-1	RESISTANCE BULB-RAM AIR TEMP	—	2312020
MT28	(SEE SHT 2E)			
P95	(SEE SHT 6)			
P84	(SEE SHT 2)			
M19	$215-1	RAM AIR TEMP IND	—	2314091
M16	$202-1	TURN & BANK IND	—	2314091
M15	$202-1	TURN & BANK IND	—	2314091
MT23	CMU 1021 (1000Ω)	AIL POS XMTR	OHMITE	2324011
M25	$-228-2	INDICATOR	—	2308112
M23	$-216-1	FLAP POSITION IND	—	2314091
P143	(SEE SHT 22)			
J143	(SEE SHT 22)			
P131	(SEE SHEET 22)			
J131	(SEE SHEET 22)			
K27	$401-1	RELAY-PILOT TRIM AUTHORITY	—	2318201
J142	S600-2FPO	RECEPTACLE	—	2318363
J112	S601-2FPO	RECEPTACLE	—	2308112
J80	S601-2FSNR	RECEPTACLE	—	PER W/D
J36	PT00SE-10-6S	RECPT	SCIN	PER W/D
J1	(REF SHT 2)	PLUG		
CB91	700-036-705 (7A)	CKT BKR-EMERGENCY PITCH TRIM	M-P	2318014
CB53	41-2-S14-LM2- (2A)	CKT BKR-PITCH TRIM	ETA	2318350
E27	2308111-1	TRIM POS CKT BD ASSY	—	2308112
B15	2380072-1	RUDDER TRIM TAB ACTUATOR		2333000
MT24	CMU 1021 (1000Ω)	RUDDER POS XMTR	OHMITE	2333000
CB54	41-2-S14-LM2- (2A)	CKT BKR - ROLL TRIM	ETA	2318350
CB52	(2A)	CKT BKR - YAW TRIM		
CB28	(2A)	CKT BKR - FLAP & TAB		
CB24	(2A)	CKT BKR - T&B-R) RAT		
CB23	41-2-S14-LM2- (2A)	CKT BKR - T&B-L	ETA	2318350
B16	660004(1)	PITCH TRIM ACTUATOR	—	2331530
B6	2380072-8	AIL TRIM TAB ACTUATOR		2324011

SYMBOL	PART NUMBER	NAME	VENDOR	INST DWG
SR31, SR32, SR33, SR34, SR35	MR324	DIODE	MOT	2318363
SR36, SR37	MR324		MOT	
SR38, SR39, SR40	1N2069		—	
SR41	1N2069	DIODE	—	2318363
SR42	Z1310	ZENER DIODE	IR	2308112

1. EFF A/P 23-035 THRU 23-039
2. EFF A/P 23-040 THRU 23-074
3. EFF A/P 23-070 THRU 23-074
4. ALL WIRES INTO P80 TO BE AWG #20, 14 COND, 105 STRAND, PER MIL-W-16878D, TYPE C, SPECTROSTRIP P/N SS1420-105C-X
5. EFF A/P 23-035 THRU 23-069
6. 2308011

NOTE: ALL WIRES ARE NO. 24 AWG UNLESS SHOWN OTHERWISE.

SYMBOL	PART NUMBER	NAME	VENDOR	INST DWG
P185	(REF SHT 18)			
J185	(REF SHT 18)			
P184	(REF SHT 7)			
J184	(REF SHT 7)			
P188	(REF SHT 17)			
J188	(REF SHT 17)			
R30	SEE 2308112	RESISTOR - 100Ω 5W		2308112
R65	SEE 2308111 (PART OF E27)	RESISTOR - 680Ω ½W		2308111
R29		- 2.7KΩ ½W		
R28		- 1.0KΩ ½W		
R27		- 1.5KΩ ½W		
R26		RESISTOR - 3.3KΩ ½W		
R41		POT - 1000Ω ½W		
R40		- 1000Ω ½W		
R39		- 1000Ω ½W		
R38		- 5000Ω ½W		
R37		- 1000Ω ½W		
R36		- 1000Ω ½W		
R35		- 1000Ω ½W		
R34	SEE 2308111	POT - 1000Ω ½W		2308111

LEAR-JET
P.O. BOX 1280
WICHITA, KANSAS

WIRING DIAGRAM, TRIM SYSTEMS, T&B, RAT, ELECT QUANTITY, & VR CONTROL

DWG NO 2308000 A

SHEET 21.10

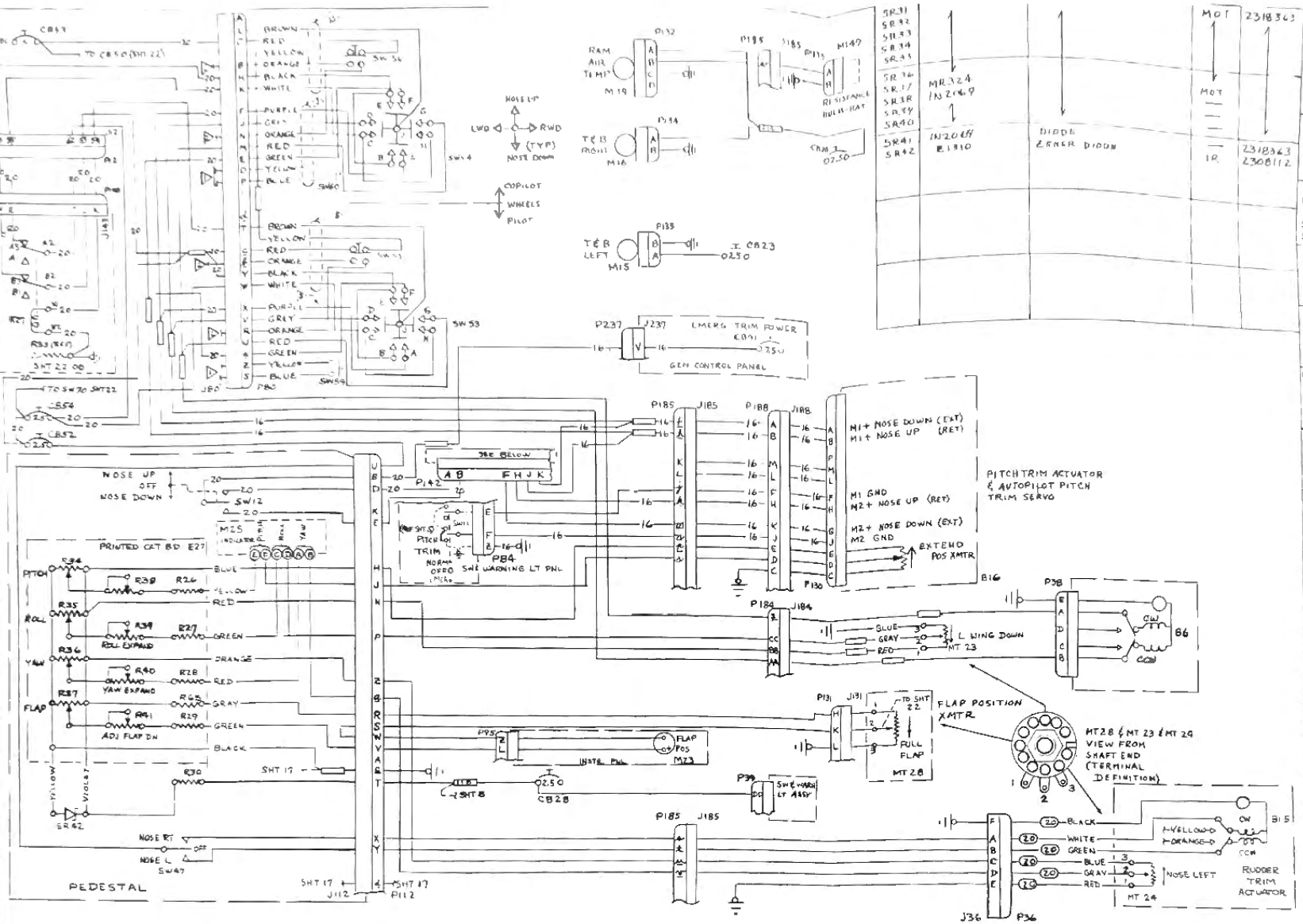

SYMBOL	PART NUMBER	NAME	VENDOR	INST DWG
P185	(REF SHT 18)			
J185	(REF SHT 18)			
P184	(REF SHT 7)			
J184	(REF SHT 7)			
P186	(REF SHT 17)			
J198	(REF SHT 17)			2308112
R30	SEE 2308112	RESISTOR - 100 Ω 5W		2308111
R45	SEE 2308111	RESISTOR - 680 Ω ½W		
R29		- 2.7 KΩ ½W		
R28		- 1.0 KΩ ½W		
R27		- 15 KΩ ½W		
R26		RESISTOR - 3.3 KΩ ½W		
R41		POT - 1000 Ω ½W		
R40		- 1000 Ω ½W		
R39		- 1000 Ω ½W		
R38		- 5000 Ω ½W		
R37		- 1000 Ω ½W		
R36		- 1000 Ω ½W		
R35		- 1000 Ω ½W		
R34	SEE 2308111	POT - 1000 Ω ½W		2308111

PART OF E27

SYMBOL	PART NUMBER	NAME	VENDOR	INST DWG
P237 J237	SEE SHEET 4 SEE SHEET 4			
P135	AN3420-4A	SLEEVE		
	MS3106( )10SL-3S	PLUG		
	MS3057-4B	CLAMP		
P134	MS3106( )10SL-3S	PLUG		
	AN3420-4A	SLEEVE		
	MS3057-4B	CLAMP		
SW60	M5 27089-3A	SWITCH - MIC		
SW59	MS 25089-3A	SWITCH - MIC		
P39	(SEE SHT 8)			
SW56	C2006	SWITCH - WHEEL MASTER		
SW55	C2006	SWITCH - WHEEL MASTER		
SW54	666501	TRIM SWITCH - COPILOT	HANSON	
SW53	666501	TRIM SWITCH - PILOT	HANSON	
SW10	8812K13	YAW TRIM SW		
SW11	8820K10	PITCH TRIM SW		
SW12	8817K13	EMERGENCY PITCH TRIM SW		
P132 J132	(SEE SHT 6)			
P133	MS3057-4B	CLAMP		
	MS3106( )10SL-3S	PLUG		
	AN3420-4A	SLEEVE		
	MS3057-6B	CLAMP		
P132	MS 3106( )14S-2S	PLUG		
P130	AN3420-4A & 6A	SLEEVE		
P142	PTC6BE20-16S	PLUG	SCIN	
P112	SB01-1TSNR	PLUG		
	SB01-1TSNL	PLUG		
P80	SB01-17POL	PLUG		
	AN3420-8A	SLEEVE		
P38	AN3420-6A	SLEEVE		
	MS3106( )16S-1S	PLUG		
P36	MS3057-8B	CLAMP		
P1	PTC6E SE 10-6P	PLUG	SCIN	PER W/D
MT49	(REF SHT 2)	PLUG		
MT28	MS 28034-1	RESISTANCE BULB RAM AIR TEMP		2312020
	(SEE SHT 22)			
P95	(SEE SHT 6)			
P84	(SEE SHT 2)			
M19	$215-1	RAM AIR TEMP IND		2314031
M16	$202-1	TURN & BANK IND		2314531
M15	$202-1	TURN & BANK IND		2314531
MT23	CAV 1021 (1000Ω)	ALL POS XMTR	SUNDSTRAND	2324001
M25	S-228-2	INDICATOR		2308112
M23	S 216-1	FLAP POSITION IND		2314091
P163	(SEE SHT 22)			
J163	(SEE SHT 22)			
P131	(SEE SHEET 22)			
J131	(SEE SHEET 22)			
K27	$401-1	RELAY - PILOT TRIM AUTHORITY		2518201
J142	$800 ZFPO	RECEPTACLE		2318363
J112	$801 ZFPO	RECEPTACLE		2308112
J80	$801-ZFSNR	RECEPTACLE		PER W/D
J36	PTC06E-10-6S	RECPT	SCIN	PER W/D
J1	(REF SHT 2)	PLUG		
CB91	7.00-036765 (7A)	CKT BKR - EMERGENCY PITCH TRIM	E-A	2318012
CB53	41-2-$14-LN2-(5A)	CKT BKR - PITCH TRIM	E-A	2318350
E27	2308111-1	TRIM POS CKT BD ASSY	-	2308112
B15	2380072-7	RUDDER TRIM TAB ACTUATOR		2332000
MT 24	CAV 1021 (1000Ω)	RUDDER POS XMTR	SUNDSTRAND	2332000
CB54	41-2-$14-LN2- 2A	CKT BKR - ROLL TRIM	E-A	2318350
CB52	(2A)	CKT BKR - YAW TRIM		
CB28	(2A)	CKT BKR - FLAP & TAB		
CB24	(2A)	CKT BKR - T & B-R, RAT		
CB23	41-2-$14-LN2-(2A)	CKT BKR - T & B-L	E-A	2318350
B16	6660041	PITCH TRIM ACTUATOR		2331530
B6	2380072-8	AIL TRIM TAB ACTUATOR		2324C
SYMBOL	PART NUMBER	NAME	VENDOR	INST DWG

2318363-1 NOTE ALL INTERNAL WIRING NO 20 AWG

▷ 2308011 SHEET 10.

▷ ALL WIRES INTO, PBO TO BE AWG #20, 14 COND, 105 STRAND, PER MIL-W-16878D, TYPE C SPECTROSTRIP P/N $81410-105C-X. ALL WIRES IN CONTROL WHEEL CAVITY AND COLUMN SUBJECT TO MOVEMENT MUST BE COVERED WITH TEFLON TAPE. ALT: RNF-100 SHRINK TUBING.

▷ 2308011 SHEET 3.

NOTE: ALL WIRES ARE NO. 24 AWG UNLESS SHOWN OTHERWISE

LEAR-JET

P.O. BOX 1286 WICHITA, KANSAS

	NAME	DATE
DRAWN	OPKSIM	8-12-63
GROUP	OPKEIN	8-11-63
CHECK		8-11-63
STRESS		
PROJ		

TITLE: WIRING DIAGRAM, TRIM SYSTEMS, T&B, RAT ELECT QUANTITY, & VR CONTROL

DRG NO 2308000 A

SCALE NONE ISSUE SHEET 21.11

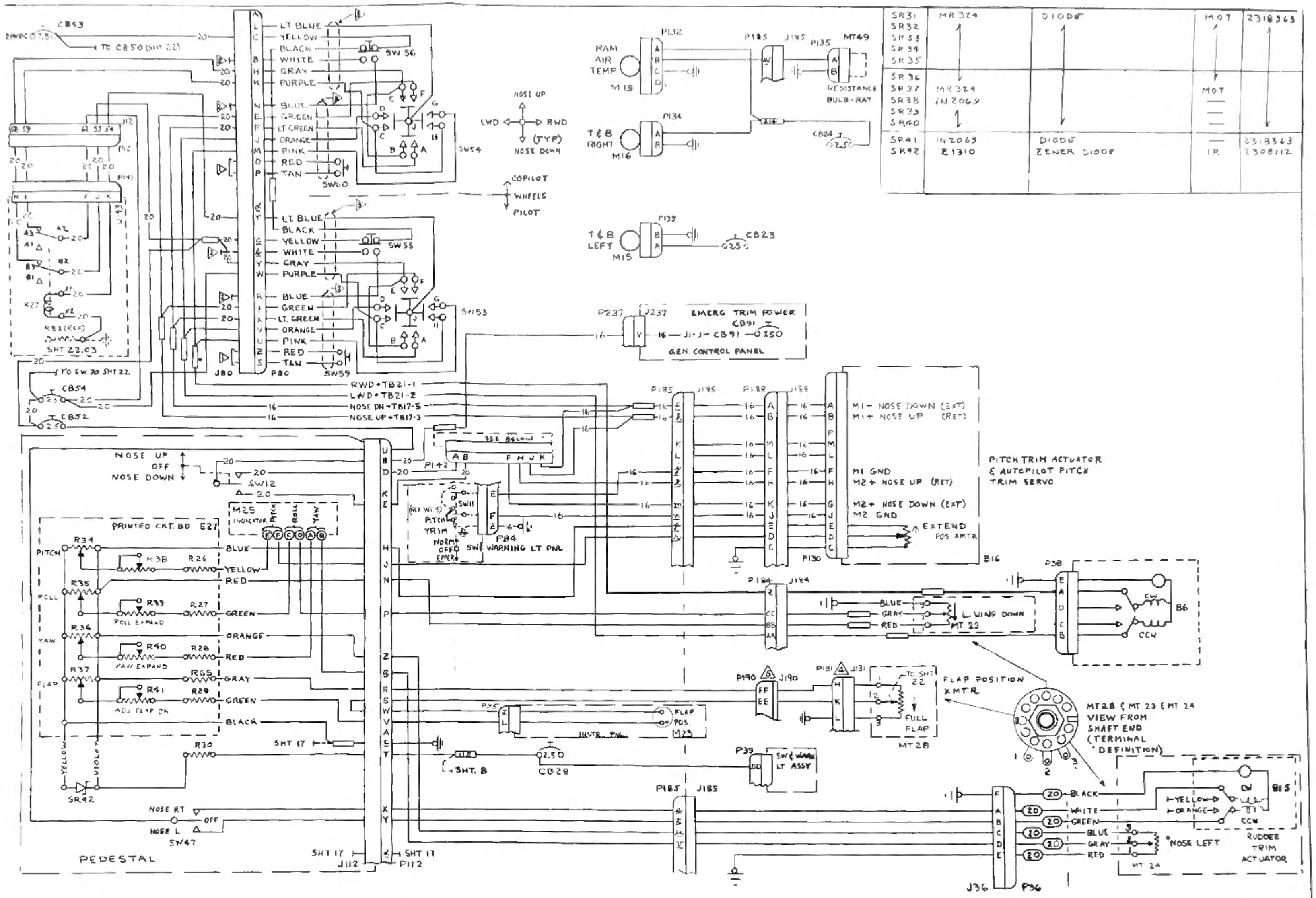

SR31 SR32 SR33 SR34 SR35	MR324	DIODE	MOT	2318363
SR36 SR37 SR38 SR39 SR40	MR324 IN2069		MOT — — —	
SR41 SR42	IN2069 Z1310	DIODE ZENER DIODE	— IR	2318363 2308112

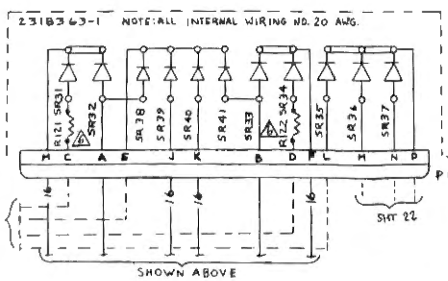

6 EFF A/P 23-083 THRU 23-089

5 EFF A/P 23-090 THRU 23-099

4 EFF A/P 23-075 THRU 23-089

2 2308011 SHEET 10

3 ALL WIRES INTO P80 TO BE AWG #20, 14 COND, 105 STRAND, PER MIL-W-16878D, TYPE C "SPECTROSTRIP" P/N S51420-105C-X. ALL WIRES IN CONTROL WHEEL CAVITY AND COLUMN SUBJECT TO MOVEMENT MUST BE COVERED WITH TEFLON TAPE, ALT: RNF-100 TYPE 1 SHRINK TUBING.

1 2308011 SHEET 3

NOTE: ALL WIRES ARE NO. 24 AWG UNLESS SHOWN OTHERWISE

SYMBOL	PART NUMBER	NAME	VENDOR	INST DWG
P185	(REF SHT 18)			
J185	(REF SHT 18)			
P184	(REF SHT 7)			
J184	(REF SHT 7)			
P188	(REF SHT 17)			
J188	(REF SHT 17)			
R30	SEE 2308112	RESISTOR - 100 Ω, 5 W		2308112
R65	SEE 2308111	RESISTOR - 680 Ω, 1/2 W		2308111
R29	SEE 2308111	RESISTOR - 2.7 K Ω, 1/2 W		2308111
R28	SEE 2308111	RESISTOR - 1.0 K Ω, 1/2 W		2308111
R27	SEE 2308111	RESISTOR - 1.5 K Ω, 1/2 W		2308111
R26	SEE 2308111	RESISTOR - 3.3 K Ω, 1/2 W		2308111
R41	SEE 2308111	POT - 1000 Ω, 1/2 W		2308111
R40	SEE 2308111	POT - 1000 Ω, 1/2 W		2308111
R39	SEE 2308111	POT - 1000 Ω, 1/2 W		2308111
R38	SEE 2308111	POT - 5000 Ω, 1/2 W		2308111
R37	SEE 2308111	POT - 1000 Ω, 1/2 W		2308111
R36	SEE 2308111	POT - 1000 Ω, 1/2 W		2308111
R35	SEE 2308111	POT - 1000 Ω, 1/2 W		2308111
R34	SEE 2308111	POT - 1000 Ω, 1/2 W		2308111

(R65 through R34: PART OF E27)

SYMBOL	PART NUMBER	NAME	VENDOR	INSTAL DWG
[illegible]	SEE SHEET 4			
[illegible]	SEE SHEET 4			
R122	[illegible]	RESISTOR	TRU OHM	2318363
R121	[illegible]	RESISTOR	TRU OHM	2318363
	AN3420-4A	SLEEVE	—	PER W/D
P35	MS3106( )10SL-3S	PLUG	—	
	MS3057-4B	CLAMP	—	
	MS3106( )10SL-3S	PLUG	—	
P34	AN3420-4A	SLEEVE	—	
	MS3057-4B	CLAMP	—	PER W/D
[illegible]	MS25089-3A	SWITCH - MIC	—	2315155
[illegible]	MS25089-3A	SWITCH - MIC	—	
P33	(SEE SHT 8)			
[illegible]	C2006	SWITCH - WHEEL MASTER	C-C	
[illegible]	C2006	SWITCH - WHEEL MASTER	C-C	
SW54	[illegible]	TRIM SWITCH - COPILOT	MASON	
SW53	[illegible]	TRIM SWITCH - PILOT	MASON	2315155
P190	(REF SHT 8)			
J190	(REF SHT 8)			
SW47	[illegible]	YAW TRIM SW	C-H	2308112
SW11	8826K10	PITCH TRIM SW	C-H	2318370
SW12	[illegible]	EMERGENCY PITCH TRIM SW	C-H	2308112
P2 & J112	(SEE SHT 6)			
	MS3057-4B	CLAMP	—	PER W/D
P133	MS3106( )10SL-3S	PLUG	—	
	AN3420-4A	SLEEVE	—	
	MS3057-6B	CLAMP	—	
P132	MS3106( )14S-2S	PLUG	—	
	AN3420-4A & -6A	SLEEVE	—	
P135	PT06[illegible]	PLUG	SCIN	PER W/D
P142	SB0[illegible]	PLUG	—	PER W/D
P[illegible]	SB0[illegible]	PLUG	—	PER W/D
P80	SB0[illegible]	PLUG	—	PER W/D
	AN3420-8A	SLEEVE	—	PER W/D
	AN3420-6A	SLEEVE	—	
P38	MS3106( )16S-1S	PLUG	—	
	MS3057-8B	CLAMP	—	
P36	PT06SE-[illegible]-6P	PLUG	SCIN	PER W/D
P[illegible]	(REF SHT 2)	PLUG	—	
MT49	MS28034-1	RESISTANCE BULB-RAM AIR TEMP	-	2312020
MT28	(SEE SHT 22)			
P55	(SEE SHT 6)			
P84	(SEE SHT 2)			
M19	[illegible]	RAM AIR TEMP IND	—	2314091
M16	[illegible]	TURN & BANK IND	—	2314091
M15	5202-1	TURN & BANK IND	—	2314091
MT23	[illegible]	[illegible] POS XMTR	OHMITE	2324011
M25	5-228-2	INDICATOR	—	2308112
M23	[illegible]	FLAP POSITION IND	—	2314091
P143	(SEE SHT 22)			
J143	(SEE SHT 22)			
P131	(SEE SHEET 22)			
J131	(SEE SHEET 22)			
K27	5401-1	RELAY - PILOT TRIM AUTHORITY	—	2318201
J142	5800-2FPO	RECEPTACLE	—	2318363
J[illegible]	5801-2FPO	RECEPTACLE	—	2308112
J80	5801-2F5NR	RECEPTACLE	—	PER W/D
J36	PT00SE-[illegible]-6S	RECPT	SCIN	PER W/D
J1	(REF SHT 2)	PLUG	—	—
CB91	7[illegible]-526-765 (7A)	CKT BKR - EMERGENCY PITCH TRIM	M-P	2318014
CB53	[illegible]	CKT BKR - PITCH TRIM	ETA	2318350
E27	2308[illegible]	TRIM POS CKT BD ASSY	—	2308112
B[illegible]	[illegible]	RUDDER TRIM TAB ACTUATOR		2333000
MT24	[illegible]	RUDDER POS XMTR	OHMITE	2333000
CB54	4-2-514-[illegible] (2A)	CKT BKR - ROLL TRIM	ETA	2318350
CB52	(2A)	CKT BKR - YAW TRIM		
CB28	(1A)	CKT BKR - [illegible] TAB		
CB24	(3A)	CKT BKR - T & B-R, RAT		
CB23	41-2-514-[illegible]-(2A)	CKT BKR - T & B-L	ETA	2318350
B16	6600C-41	PITCH TRIM ACTUATOR	—	2331530
B6	[illegible]	AIL TRIM TAB ACTUATOR	—	2324011

LEAR-JET
P. O. BOX 1280
WICHITA, KANSAS

	NAME	DATE
DRAWN	OPHEIM	9-12-63
CHECKED	OPHEIM	[illegible]
[illegible]	[illegible]	[illegible]
[illegible]	[illegible]	[illegible]

TITLE: WIRING DIAGRAM, TRIM SYSTEMS, T&B, RAT, ELECT QUANTITY, & VR CONTROL

DWG NO. 2308000 A

SHEET 21.13

NOTICE: This wiring diagram is applicable to aircraft 23-003 thru 23-099 if they have been modified per SK23-294. If aircraft have not been modified, refer to page 9-55 thru 9-58 as applicable to aircraft serial number.

Note

ALL WIRES ARE 24 AWG UNLESS OTHERWISE SHOWN.

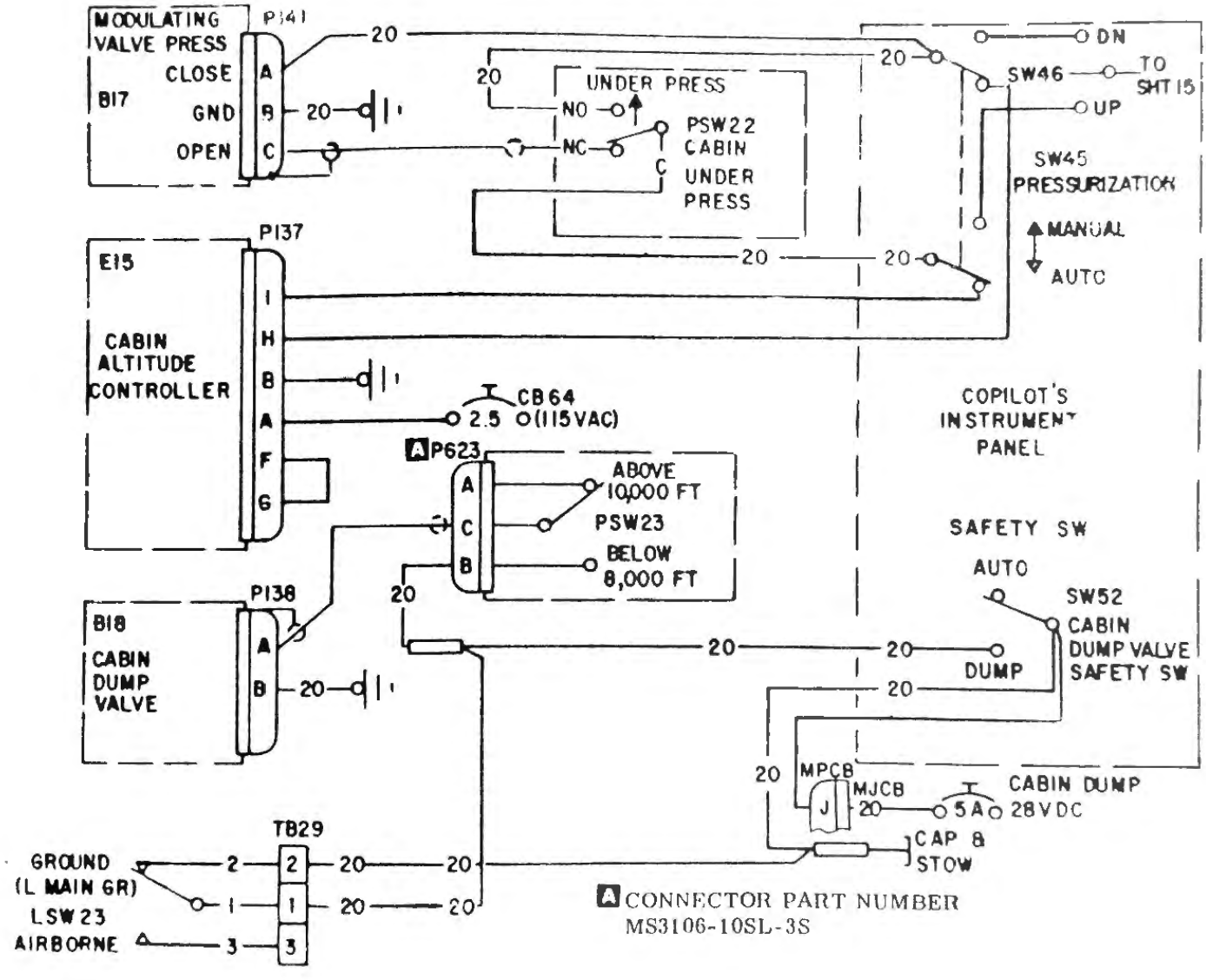

WIRING DIAGRAM - PRESSURIZATION SYSTEM

NOTICE: This wiring diagram is applicable to aircraft 23-003 thru 23-099 if they have been modified per SK23-294. If aircraft have not been modified, refer to page 9-55 thru 9-58 as applicable to aircraft serial number.

Note

ALL WIRES ARE 24 AWG UNLESS OTHERWISE SHOWN.

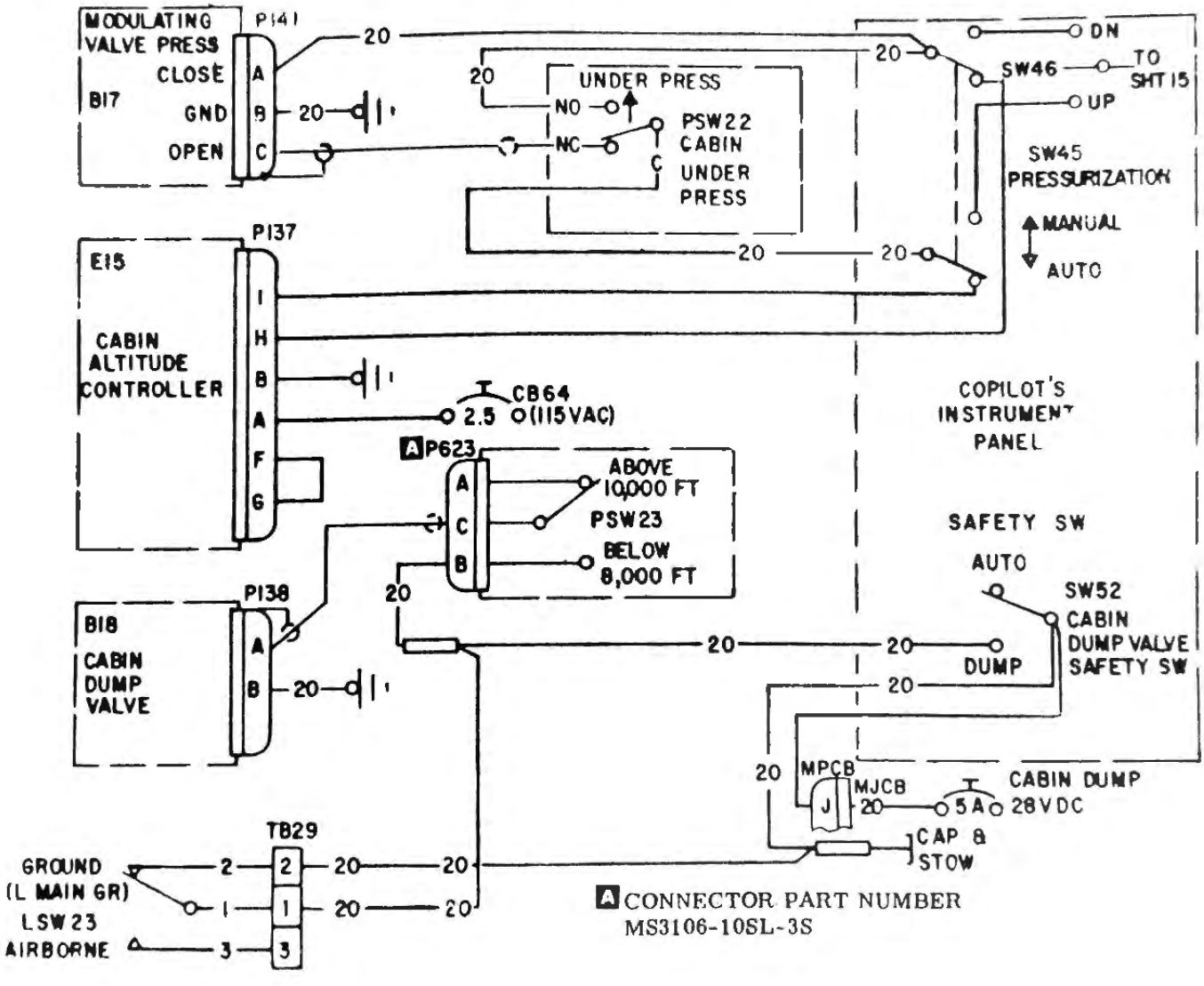

WIRING DIAGRAM - PRESSURIZATION SYSTEM

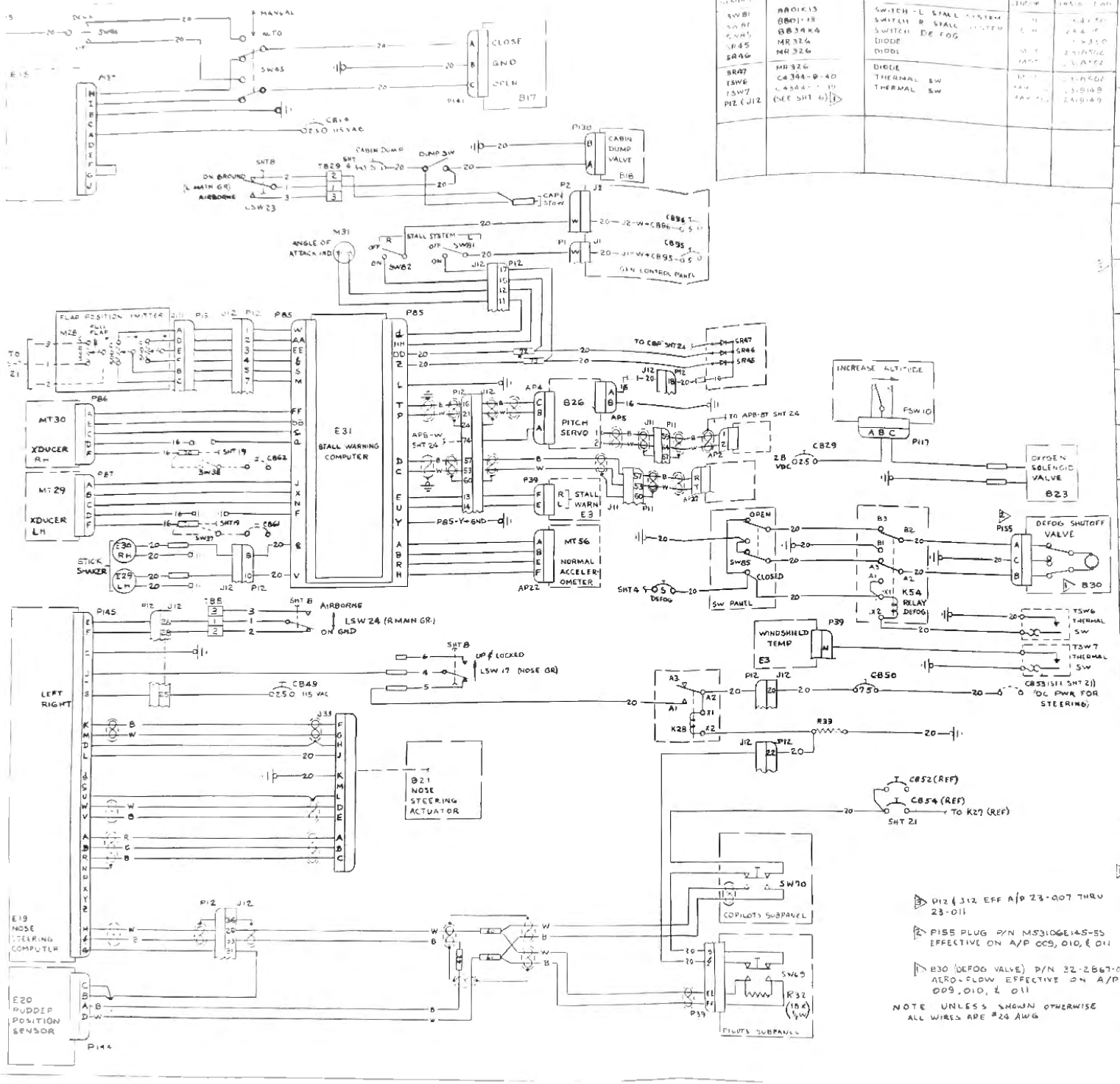

SYMBOL	PART NUMBER	NAME
SW81	AA01K13	SWITCH - L STALL SYSTEM
SW82	BA01-18	SWITCH - R STALL SYSTEM
CR45	BB34K4	SWITCH - DE FOG
SR46	MR326	DIODE
	MR326	DIODE
BR47	MR326	DIODE
TSW6	C4344-9-40	THERMAL SW
TSW7	C4344-9-40	THERMAL SW
P12 (J12	(SEE SHT 6)	

SYMBOL	PART NUMBER	NAME	VENDOR	VEND. DWG
SW70	C1006	SWITCH		
SW69	P2016	SWITCH		
SW57	BA01E18	SWITCH - CABIN DUMP VALVE		
SW46	PA12E18	SWITCH - MANUAL CONTROL		
SW45	PA14A4	SWITCH - AUTO MANUAL		
R33	F409	RESISTOR - 2.5 Ω, 4W	IRC	E3 AT E
R32	18P 15 1/4 W	RESISTOR - NOSE WHEEL STEERING		
PSW10	44A139	OXYGEN AMBIENT SWITCH		
AP22	MS3106A-14S-7S	PLUG		
	MS3057-10A	STRAIN CABLE CLAMP		
	AN3420-10A	SLEEVE		
	AN3420-6A	SLEEVE		
AP5	MS3106A-10SL-3S	PLUG - PITCH SERVO		
	MS3057-4A	CABLE CLAMP		
	AN3420-4A	SLEEVE		
	MS3106A-10SL-3S	PLUG - PITCH SERVO		
AP4	MS3057-4B	CABLE CLAMP		
AP2	AN3420-4A	SLEEVE		
AP1	(SEE SHT 24)			
P2 & P1	(SEE SHT 21)			
P39	(SEE SHT 8)			
P155	MS3106E14S-7S	PLUG		
P131	MIMS-L4W19C	PLUG		
P87	PT06SE10-6S	RECPT - XDUCER L		
P86	PT06SE10-6S	RECPT - XDUCER R		
	201182-1	CLAMP	AMP	
P85	42981-1 (50EA)	SOCKETS		
	201358-1	HOUSING		
	201389-2	JACKSCREW - F		
	200833-4 (21EA)	CORNER GUIDE PIN		
	200835-4 (2 EA)	CORNER GUIDE PIN		
P145	201229-1	CLAMP		
	42981-1 (26EA)	SOCKETS		
	200512-2	HOUSING		
	201388-2	JACKSCREW - M		
	201389-2	JACKSCREW - F	AMP	
P141	MS3106R-10SL-3S	PLUG		
P138	MS3106A-10SL-4S	PLUG		
P137	MS3102R-18-1S	PLUG		
	MS3057-6B	ADAPTER		
P144	MS3106(C)14S-5S	PLUG		
	AN3420-4A	BUSHING		
	AN3420-6A	BUSHING		
	MS3057-4B	ADAPTER		
P117	MS3106(C)10SL-3S	PLUG		
	AN3420-4A	SLEEVE		PER W/D
MT56	4-8049	NORMAL ACCELEROMETER	LEAR	2316552
MT30	4-8071	TRANSDUCER (VANE)	LEAR	2316072
MT29	4-8070	TRANSDUCER (VANE)	LEAR	2316072
MT28	2325040-35	FLAP POSITION XMITTER	—	2325040
M31	5-5010	ANGLE OF ATTACK IND	LEAR	2316050
LSW24	(SEE SHT 8)			
LSW23	(SEE SHT 8)			
LSW17	(SEE SHT 8)			
K54	8401-1	RELAY - DEFOG		2316354
K28	8401-1	RELAY - NOSE STEERING		2316402
J131	M10P-LRN	RECPT	WINCH	PER W/D
J33	PT06SE14-12S	PLUG	SCN	PER W/D
E31	4-6001	STALL WARNING COMPUTER	LEAR	2316502
E30	2380051-1	VIBRATOR - STALL WARN	—	2316076
E29	2380051-1	VIBRATOR - STALL WARN		2316076
E20	4-3020	RUDDER POSITION SENSOR	LEAR	2315144
E19	4-2021	NOSE STEERING COMPUTER	LEAR	2316502
E15	13300	CABIN ALTITUDE CONTROLLER	IDC	2316050
E3	(SEE SHT 5)			
CB96	8C1-5	CKT BKR	BRILES	2316010
CB95	8C1-5			2316010
CB65	(SEE SHT 19)			2316010
CB24	8C1-2			2316350
CB50	8C1-7			2316350
CB49	8C1-2			2316350
CB29	8C1-2	CKT BKR	BRILES	2316350
B30	8746 8958	DEFOG SHUTOFF VALVE	BAR-LOW	2316116
B26	4-1020	PITCH SERVO	LEAR	2312550
B23	2V 903	OXYGEN SOLENOID VALVE	ZEP	2316057
B21	9-1020	ACTUATOR - NOSE STEERING	LEAR	2342000
B18	13299-3	CABIN DUMP VALVE	IDC	2316074
B17	13298	MODULATING VALVE - PRESS	DC	2316410
SYMBOL	PART NUMBER	NAME	VENDOR	VEND DWG

P12 & J12 EFF A/P 23-007 THRU 23-011

P155 PLUG P/N MS3106E14S-5S EFFECTIVE ON A/P 009, 010, & 011

B30 (DEFOG VALVE) P/N 32-2867-001 AERO-FLOW EFFECTIVE ON A/P 009, 010, & 011

NOTE UNLESS SHOWN OTHERWISE ALL WIRES ARE #24 AWG

LEAR-JET

P.O. BOX 1208 WICHITA 1 KANSAS

	NAME	DATE
DRAWN	OPHEIM	4-24-64
CHECK		5-11-64
STRESS		
PROJ		4-27-65

TITLE: WIRING DIAGRAM NOSE STEERING & PRESSURIZATION SYSTEM

DRAWING 2308000 A

SUPERSEDES | SUPERSEDED BY

SCALE | 4-19-65 | SHEET 22 OF

SW70	C2006	SWITCH	C-C	2314050
SW69	C2006	SWITCH	C-C	2308104
SW52	8801K13	SWITCH - CABIN DUMP VALVE	C-H	2314050
SW46	8801K13	SWITCH - MANUAL CONTROL	C-H	2314050
SW47	8814K3	SWITCH - AUTO-MANUAL SELECT	C-H	2314050
R33	F403	RESISTOR - 2.5 Ω, 40 W	OHM	23 8502
R32	18K Ω, 10 W	RESISTOR - NOSE WHEEL STEERING	OHM	PER W/D
PSW10	44A11B	OXYGEN ANEROID SWITCH	CU-CO	2319089
AP22	MS3106A18-1P MS3057-10B AN3420-10A AN3420-6A	PLUG CABLE CLAMP SLEEVE SLEEVE	— — — —	PER W/D
AP5	MS3106A 10SL-3S MS3067-4B AN3420-4A	PLUG - PITCH SERVO CABLE CLAMP SLEEVE	— — —	
AP4	MS3106A 10SL-3S MS3057-4B	PLUG - PITCH SERVO CABLE CLAMP	— —	
AP2 AP1 PJ (P1 P39	AN3420-4A (SEE SHT 10 (2308011)) (SEE SHT 10 (2308011)) (SEE SHT 8)	SLEEVE	—	
P185 P181 P87 P86	MS3106B14S-5S MIOS-LSH18C PT00SE10-6S PT00SE10-6S 201182-1	PLUG PLUG RECPT - XDUCER L RECPT - XDUCER R CLAMP	WINCH — — AMP	
P85	42381-1 (5084) 201350-1 201399-2 200833-4 (2 EA) 200838-4 (2 EA)	SOCKETS HOUSING JACKSCREW - F CORNER GUIDE PIN CORNER GUIDE PIN	AMP	
P141 P136 P137 P144	MS3106R-10SL-3S MS3106A-10SL-4S MS 2106R-18-1S MS3057-6B MS3106()14S-5S	PLUG PLUG PLUG ADAPTER PLUG	— — — — —	
P117	AN3420-4A AN3420-6A MS3057-4B MS3106(1)0SL-3S AN3420-4A	BUSHING BUSHING ADAPTER PLUG SLEEVE	— — — — —	PER W/D
MT56 MT30 MT29 MT28 M31	4-8049 4-8071 4-8070 2325040-35 5-5010	NORMAL ACCELEROMETER TRANSDUCER (VANE) TRANSDUCER (VANE) FLAP POSITION EMITTER ANGLE OF ATTACK IND	LEAR LEAR LEAR — LEAR	2318502 2314072 2314072 2325040 2314050
LSW24 LSW23 LSW5	(SEE SHT 8) (SEE SHT 8) (SEE SHT 8)			
K28	4601-1	RELAY - NOSE STEERING	—	2318602
J131 J38	M85P-4RN PT00SE14-12S	RECPT PLUG	WINCH SCIN	PER W/D PER W/D
E31 E30	4-6001 2380081-1	STALL WARNING COMPUTER VIBRATOR - STALL WARN	LEAR —	2318502 2314076
E29 E20	2380081-1 4-3020	VIBRATOR - STALL WARN RUDDER POSITION SENSOR	— LEAR	2314076 2315146
E15 E3	13300 (SEE SHT 3)	CABIN ALTITUDE CONTROLLER	IDC	2318502
CB96 CB95 CB65	9CI-5 8CI-5 (SEE SHT 19)	CKT BKR	BRILES	2318010 2318010 2318010
CB64 CB50 CB49 CB29 B30	8CI-2 8CI-7 8CI-2 8CI-2 32-2867-001	CKT BKR DEFOG SHUTOFF VALVE	BRILES AERO-FLOW	2318350 2318350 2318350 2318350 2318116
B26 B23 B21 B16 B13	4-1020 2V503 3-1020 16299-3 13258	PITCH SERVO OXYGEN SOLENOID VALVE ACTUATOR - NOSE STEERING CABIN DUMP VALVE MODULATING VALVE - PRESS	LEAR REP LEAR IDC IDC	2312500 2317057 2342000 2316076 2311410
SYMBOL	PART NUMBER	NAME	VENDOR	INST DWG

SYMBOL	PART NUMBER	NAME	VENDOR	INSTAL DWG
SW61	8801K13	SWITCH - L STALL SYSTEM	C-H	2314050
SW62	8801K13	SWITCH - R STALL SYSTEM	C-H	2314050
SW85	8854K4	SWITCH - DE FOG	C-H	2318350
SR45	MR326	DIODE	MOT	2318302
SR46	MR826	DIODE	MOT	2318802
SR47	MR326	DIODE	MOT	2318802
J15 (P12	(SEE SHT 6)			
TSW7	C4844-9-40	THERMAL SW	BAR-COL	2319163
J12 (P12	(SEE SHT 6)			

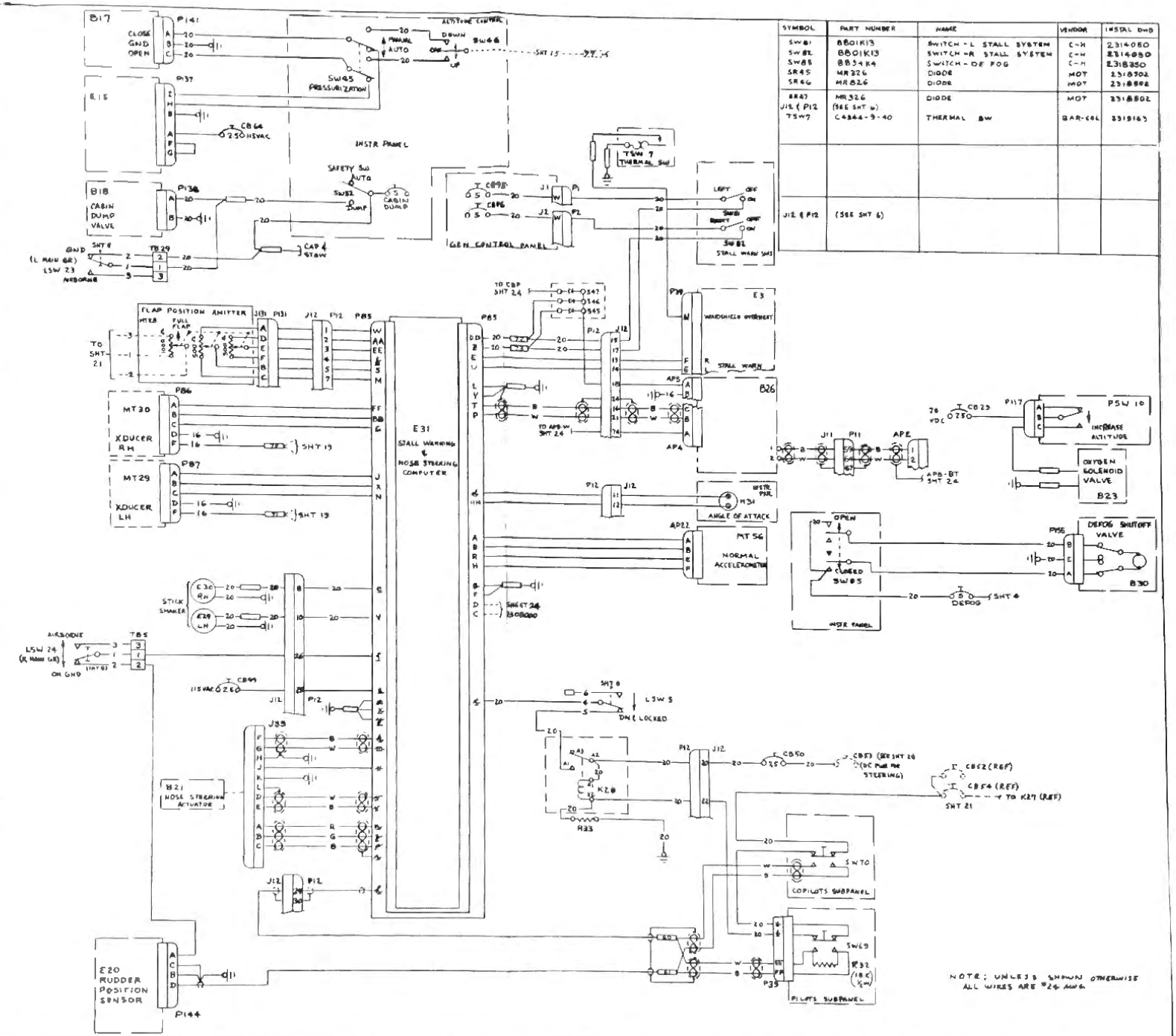

NOTE: UNLESS SHOWN OTHERWISE ALL WIRES ARE #26 AWG

LEAR-JET

P. O. BOX 1280 WICHITA, KANSAS

	NAME	DATE
DRAWN	OPHEIM	2-24-66
GROUP	OPHEIM	2-24-66
CHECK	[illegible]	3-1-66
STRESS		
PROJ		

TITLE: WIRING DIAGRAM NOSE STEERING & PRESSURIZATION SYSTEM

DWG NO: 2308000 A

SCALE: NONE | 5-19-66 | SHEET 88.04

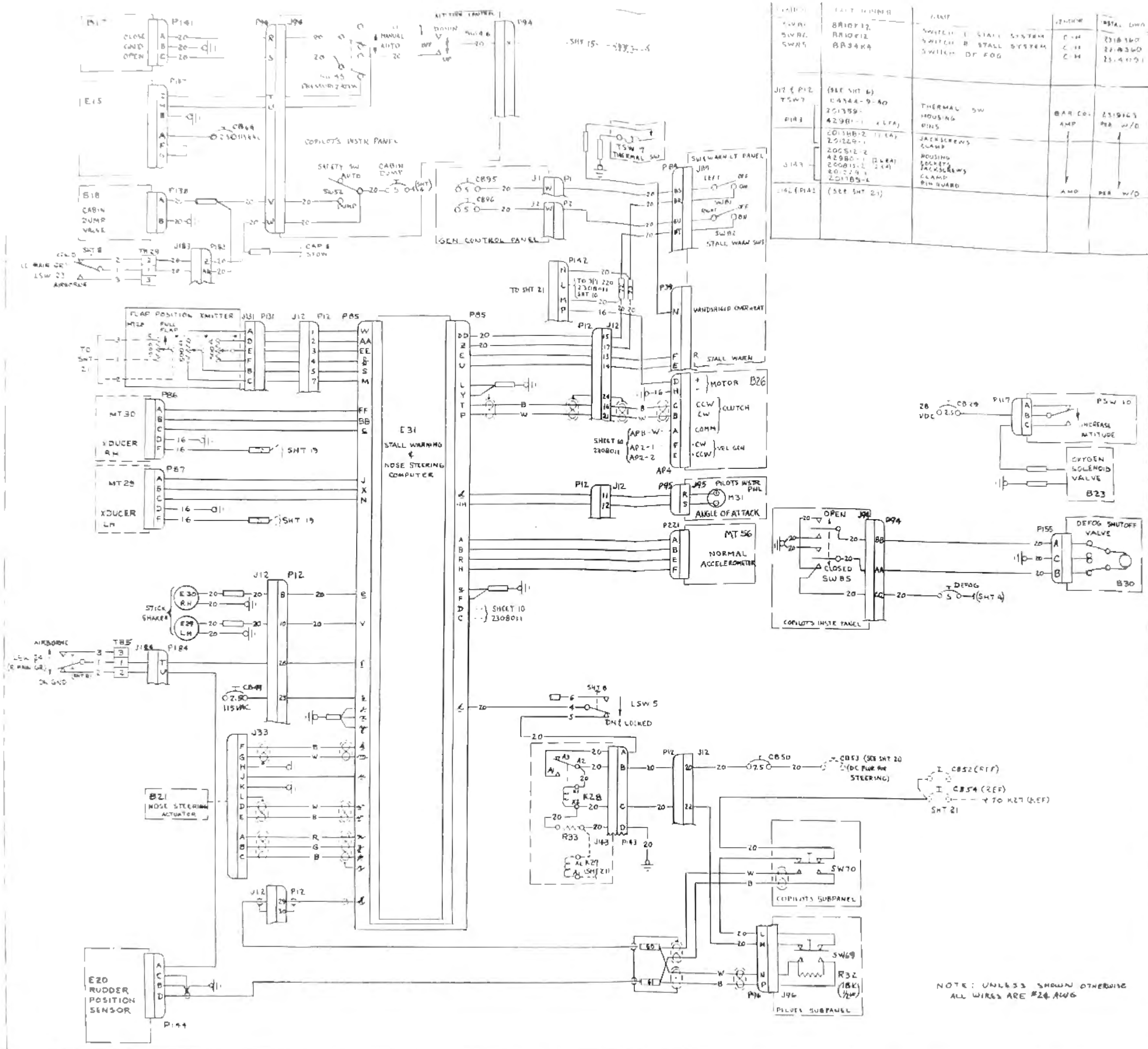

Symbol	Part Number	Name	Vendor	Inst Dwg
SWR1	8AR10F12	SWITCH L STALL SYSTEM	C-H	2318360
SWR2	8AR10F12	SWITCH R STALL SYSTEM	C-H	2318360
SW85	8AR34K4	SWITCH DEFOG	C-H	2314091
J12 & P12	(SEE SHT 6)			
TSW7	C4344-9-80	THERMAL SW	BAR COL	2319165
P143	201359-1	HOUSING	AMP	PER W/O
	42981-1 (4 EA)	PINS		
	201358-2 (2 EA)	JACKSCREWS		
	201229-1	CLAMP		
J143	200512-2	HOUSING		
	42980-1 (2 EA)	SOCKETS		
	200815-2 (2 EA)	JACKSCREWS		
	201229-1	CLAMP		
	201185-6	PIN GUARD	AMP	PER W/O
J142 & P142	(SEE SHT 21)			

Symbol	Part Number	Name	Vendor	Inst Dwg
SW70	CP006	SWITCH		2314091
SW69	C2006	SWITCH		2314091
SW52	8AD1R13	SWITCH CABIN DUMP VALVE	C-H	2314091
SW46	MST205$	SWITCH MANUAL CONTROL	C-H	2314091
SW45	8824K8	SWITCH AUTO MANUAL SAFETY	H	2314091
R33	F409	RESISTOR 25 A 40 W	OHM	2318251
R32	18K Ω 1/2 W	RESISTOR-NOSE WHL STEERING	OHM	PER W/O
PSW10	44A119	OXYGEN ANEROID SWITCH	[illegible]	2319759
AP4	PT06#E12 8$	PLUG	SCIN	PER W/O
P221	MS3106A18 1$	PLUG		PER W/O
	MS3057-10B	CABLE CLAMP	—	
	AN3420-10A	SLEEVE	—	
	AN3420-6A	SLEEVE		
P96	200838-2	HOUSING	AMP	
	42981-1 (34 EA)	PIN		
	201389-2 (2 EA)	JACKSCREWS		
	200835-4 (2 EA)	GUIDE PINS		
	200833-4 (2 EA)	GUIDE PINS		
	28224-1	CLAMP	AMP	
P94	(SEE SHT 15)			
AP2	(SEE SHT 10 (23080-))			
AP1	(SEE SHT 10 (23080-))			
P2 & P1	(SEE SHT 2)			
P39	(SEE SHT 8)			
P84	(SEE SHT 2)			
P155	MS3106[ ]14S 7$	PLUG	—	
P131	M10$-LSH19C	PLUG	WINCH	
P87	PT00$E10-6$	RECPT-XDUCER L	—	
P86	PT00SE10-6$	RECPT-XDUCER R	—	
	201182-1	CLAMP	AMP	
P85	42981-1 (30 EA)	SOCKETS		
	201358-1	HOUSING		
	201389-2	JACKSCREW-F		
	200833-4 (2 EA)	CORNER GUIDE PIN		
	200835-4 (2 EA)	CORNER GUIDE PIN		
J96	201357-1	HOUSING		
	42980-1 (34 EA)	SOCKETS		
	200874-2 (2 EA)	JACKSCREWS		
	200835-4 (2 EA)	GUIDE PINS		
	200833-4 (2 EA)	GUIDE PINS		
	201350-2	PIN GUARD	AMP	
P141	MS3106R-10SL-3S	PLUG	—	
P138	MS3106A-10SL-4S	PLUG	—	
P137	MS3106R-18-1$	PLUG	—	
P144	MS3057-6B	ADAPTER	—	
	MS3106[ ]14S-5$	PLUG	—	
	AN3420-4A	BUSHING	—	
	AN3420-6A	BUSHING	—	
P117	MS3057-4B	ADAPTER	—	
	MS3106[ ]10SL-3S	PLUG	—	
	AN3420-4A	SLEEVE	—	PER W/O
MT56	4-8049	NORMAL ACCELEROMETER	LEAR	2318221
MT30	4-8071	TRANSDUCER (VANE)	LEAR	2314072
MT29	4-8070	TRANSDUCER (VANE)	LEAR	2314072
MT28	2325040-35	FLAP POSITION XMITTER	—	2325040
M31	5-5018	ANGLE OF ATTACK IND	LEAR	2314091
LSW24	(SEE SHT 8)			
LSW23	(SEE SHT 8)			
LSW5	(SEE SHT 8)			
J183	(REF SHT 7)			
K28	$401-1	RELAY - NOSE STEERING	—	2318201
J131	M10P-LRN	RECPT	WINCH	PER W/O
J33	PT00SE4-12$	PLUG	SCIN	PER W/O
P183	(REF SHT 7)			
E31	4-2022-01	COMPUTER-STALL WARN & NOSE WHL	LEAR	2318201
E30	2380051-1	VIBRATOR - STALL WARN	—	2314076
E29	2380051-1	VIBRATOR - STALL WARN	—	2314076
E20	4-3020	RUDDER POSITION SENSOR	LEAR	2315146
J184	(REF SHT 7)			
E15	13300	CABIN ALTITUDE CONTROLLER	IDC	2314091
P184	(REF SHT 7)			
CB96	700-036-5	CKT BKR	M-P	2318010
CB95	700-036-5		M-P	2318010
			M-P	2318010
CB65	(SEE SHT 19)		ETA	
CB64	41-2-$14-LN2 (2A)			2318350
CB50	41-2-$14-LN2 (7A)			2318350
CB49	41-2-$14-LN2 (2A)			2318350
CB29	41-2-$14-LN2 (2A)	CKT BKR	ETA	2318350
B30	8YLB 875B	DEFOG SHUTOFF VALVE	BAR-COL	2318116
B26	4-1020	PITCH SERVO	LEAR	2312500
B23	2V 903	OXYGEN SOLENOID VALVE	ECP	2319057
B21	9-1020	ACTUATOR - NOSE STEERING	LEAR	2342000
B18	13299-3	CABIN DUMP VALVE	IDC	2314074
B17	13298	MODULATING VALVE - PRESS	IDC	2314410

LEAR-JET P. O. BOX 1280 WICHITA, KANSAS

	Name	Date
Drawn	OPHEIM	24-64
Group	OPHEIM	24-64
Check	[illegible]	[illegible]
Stress		
Proj		[illegible]

Title: WIRING DIAGRAM NOSE STEERING & PRESSURIZATION SYSTEM

DWG NO 2308000 A

SHEET 22, 07 OF

SYMBOL	PART NUMBER	NAME	VENDOR	INST DWG
SW70	C200G	SWITCH		
SW69	C200G	SWITCH	C-C	2314091
SW52	8801K13	SWITCH - CABIN DUMP VALVE	C-C	2314091
			C-H	2314091
SW45	8824K19	SWITCH - AUTO - MANUAL SELECT	C-H	2314091
R33	F409	RESISTOR - 25 Ω, 40 W	OHM	2318201
R32	18K Ω ½ W	RESISTOR - NOSE WHEEL STEERING	OHM	PER W/D
PSW10	444-15	OXYGEN ANEROID SWITCH	LU-CO	2319059
AP4	PTO6SE12-8S	PLUG	SCIN	PER W/D
P221	MS3106A18-1S	PLUG		PER W/D
P221	MS3057-10B	CABLE CLAMP	—	
P221	AN3420-12A	SLEEVE	—	
P221	AN3420-6A	SLEEVE	—	
P96 △4	200638-2	HOUSING		
P96 △4	42981-1 (30 ea)	PIN		
P96 △4	201359-2 (2 ea)	JACKSCREW		
P96 △4	200833-4 (2 ea)	GUIDE PINS		
P96 △4	200833-4 (2 ea)	GUIDE PINS		
P96 △4	201224-1	CLAMP		
P94	(SEE SHT 3)			
AP2	(SEE SHT 10 (2308011)			
AP1	(SEE SHT 10 (2308011)			
P38	(SEE SHT 8)			
P33	(SEE SHT 2)			
P155	MS3106A14S-7S	PLUG	—	
P131 △1	M105-LSH19C	PLUG	WINCH	
P87	PTO6SE10-6S	RECPT - XDUCER L	—	
P86	PTO6SE10-6S	RECPT - XDUCER R	—	
P85 △4	201182-1	CLAMP		
P85 △4	42981-1 (50 ea)	SOCKETS		
P85 △4	201358-1	HOUSING		
P85 △4	201389-2	JACKSCREW-F		
P85 △4	200833-4 (2 ea)	CORNER GUIDE PIN		
P85 △4	200835-4 (2 ea)	CORNER GUIDE PIN		
J96 △4	201357-1	HOUSING		
J96 △4	42980-1 (34 ea)	SOCKETS		
J96 △4	200874-2 (2 ea)	JACKSCREW		
J96 △4	200835-4 (2 ea)	GUIDE PINS		
J96 △4	200833-4 (2 ea)	GUIDE PINS		
J96 △4	201350-2	PIN GUARD		
P141	MS3106R-10SL-3S	PLUG	—	
P138	MS3106A-10SL-4S	PLUG	—	
P157	MS3106R-18-1S	PLUG	—	
	MS3057-6B	ADAPTER	—	
P144	MS3106( )14S-5S	PLUG	—	
P117	AN3420-4A	BUSHING	—	
P117	MS3420-5A	BUSHING	—	
P117	MS3057-4B	ADAPTER	-	
P117	MS3106( )10SL-3S	PLUG	-	
P117	AN3420-4A	SLEEVE	-	PER W/D
MT56	4-6045	NORMAL ACCELEROMETER	LEAR	2318221
MT30	4-5071	TRANSDUCER (VANE)	LEAR	2314072
MT29	4-5070	TRANSDUCER (VANE)	LEAR	2314072
MT28	2325040-35	FLAP POSITION XMITTER	—	2325040
M31	5-5010	ANGLE OF ATTACK IND	LEAR	2314091
LSW24	(SEE SHT 8)			
LSW23	(SEE SHT 8)			
LSW5	(SEE SHT 8)			
J183	(REF SHT [illegible])			
K28	6401-1	RELAY - NOSE STEERING	—	2318201
J131 △1	M105-LRN	RECPT	WINCH	PER W/D
J33	PTO0SE14-12S	PLUG	SCIN	PER W/D
P183	(REF SHT [illegible])			
E31	4-2022-01	COMPUTER - STALL WARN & NOSE WHL	LEAR	2318201
E30	2380051-1	VIBRATOR - STALL WARN	—	2314076
E29	2380051-1	VIBRATOR - STALL WARN	—	2314076
E20	4-3020	RUDDER POSITION SENSOR	LEAR	2315146
J194	(REF SHT [illegible])			
E15	13800	CABIN ALTITUDE CONTROLLER	IDC	2314091
P194	(REF SHT [illegible])			
CB96	700-034-5	CKT BKR	M-P	2318014
CB95	700-034-5		M-P	2318014
P190 △2	(SEE SHT 8)		ETA	
J190 △2	(SEE SHT 8)			
CB64	4-2-E-4-LN2 (2A)			2318350
CB50	4-2-E4-LN2 (7A)			2318350
CB49	4-2-E4-LN2 (2A)			2318350
CB29	4-2-E4-LN2 (2A)	CKT BKR	ETA	2318350
B30	[illegible]	DEFOG SHUTOFF VALVE	BAR-COL	2319116
B26	4-1021	PITCH SERVO	LEAR	2312500
B23	ZV 903	OXYGEN SOLENOID VALVE	ZEP	2319057
B21	5-1020	ACTUATOR - NOSE STEERING	LEAR	2342000
B18	13299-3	CABIN DUMP VALVE	IDC	2314076
B17	13298	MODULATING VALVE - PRESS	IDC	2311410

LEAR-JET P. O. BOX 1280 WICHITA, KANSAS

	NAME	DATE
DRAWN	OPHEIM	1-24-66
GROUP	OPHEIM	1-24-66
CHECK	[illegible]	2-1-66
STRESS		
APPR.	[illegible]	[illegible]

TITLE: WIRING DIAGRAM NOSE STEERING & PRESSURIZATION SYSTEM

DWG NO 2308000 A

SCALE — 1-3-66 SHEET 22.10 OF

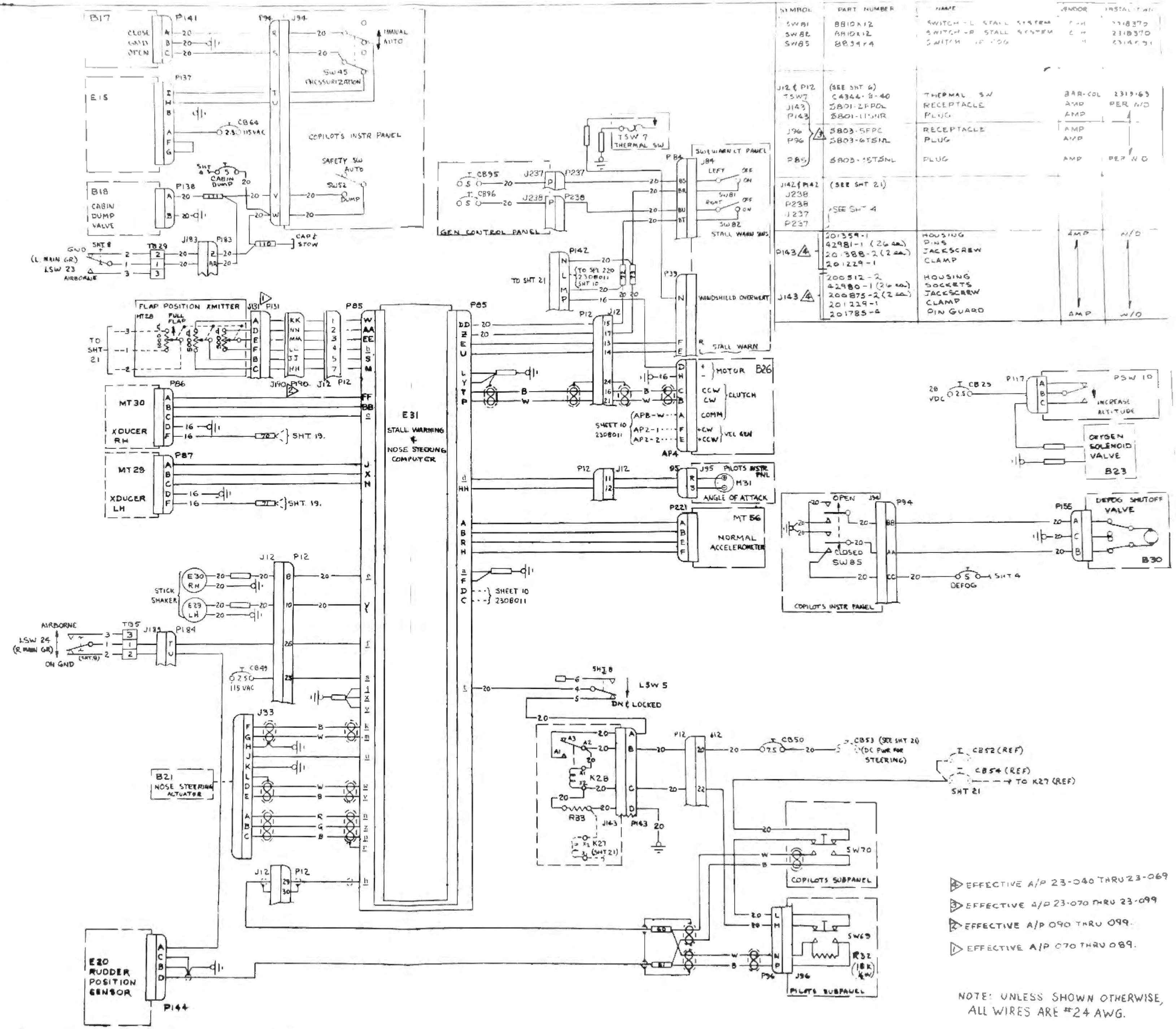

SYMBOL	PART NUMBER	NAME	VENDOR	INSTAL DWG
SW81	8810K12	SWITCH - L STALL SYSTEM	C-H	2318370
SW82	8810K12	SWITCH - R STALL SYSTEM	C-H	2318370
SW85	8834K4	SWITCH - DEFOG	C-H	2314091
J12 & P12	(SEE SHT 6)			
TSW7	C4344-3-40	THERMAL SW	BAR-COL	2319163
J143	5801-2FPOL	RECEPTACLE	AMP	PER W/D
P143	5801-11SNR	PLUG	AMP	
J96 △3	5803-5FPC	RECEPTACLE	AMP	
P96 △3	5803-6TSNL	PLUG	AMP	
P85 △3	5803-15TSNL	PLUG	AMP	PER W/D
J142 & P142	(SEE SHT 21)			
J238	(SEE SHT 4)			
P238	(SEE SHT 4)			
J237	(SEE SHT 4)			
P237	(SEE SHT 4)			
P143 △4	201359-1	HOUSING	AMP	W/D
P143 △4	42981-1 (26 ea)	PINS		
P143 △4	201388-2 (2 ea)	JACKSCREW		
P143 △4	201229-1	CLAMP		
J143 △4	200512-2	HOUSING		
J143 △4	42980-1 (26 ea)	SOCKETS		
J143 △4	200875-2 (2 ea)	JACKSCREW		
J143 △4	201229-1	CLAMP		
J143 △4	201785-4	PIN GUARD	AMP	W/D

△4 EFFECTIVE A/P 23-040 THRU 23-069

△3 EFFECTIVE A/P 23-070 THRU 23-099

△2 EFFECTIVE A/P 090 THRU 099.

△1 EFFECTIVE A/P 070 THRU 089.

NOTE: UNLESS SHOWN OTHERWISE, ALL WIRES ARE #24 AWG.

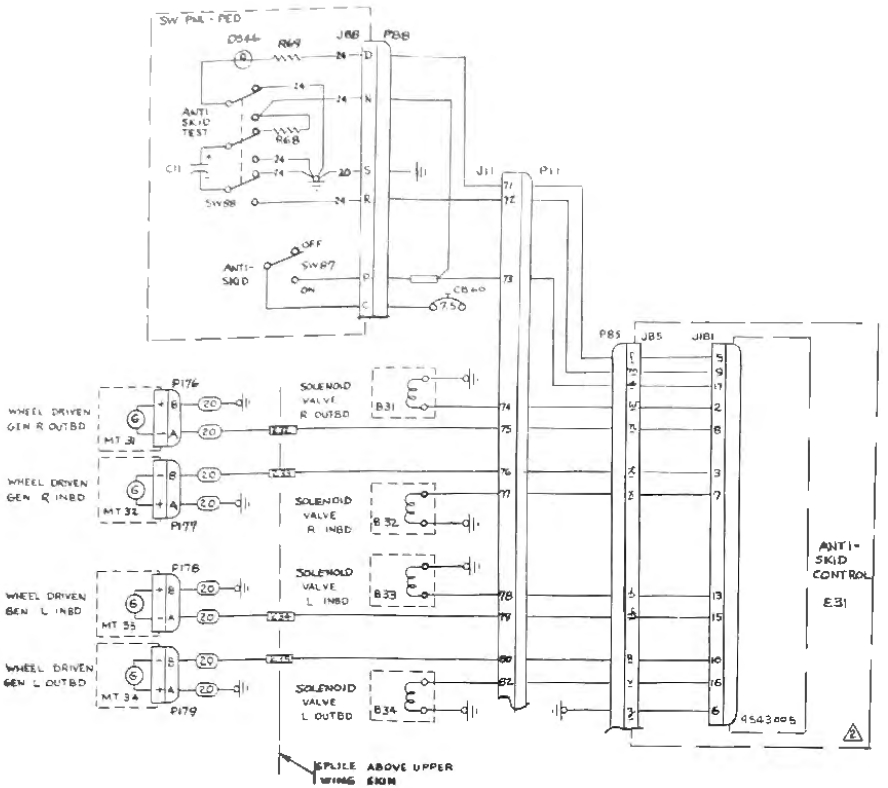

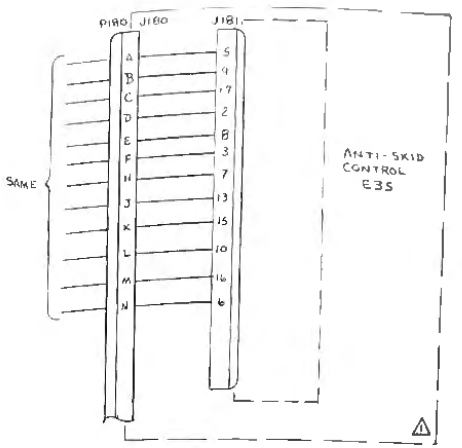

SYMBOL	PART NUMBER	NAME	VENDOR	INST. DWG
P85	201359-1	HOUSING		
	42981-1 (26 EA)	PINS		
	201588-2	JACKSCREW		
	201229-1	CLAMP		
J85	200612-2	HOUSING		
	201785-4	GUARD		
	42980-1 (26 EA)	PIN		
	200875-2	JACKSCREW		
R69	510Ω 2W	RESISTOR (MOLD COMP)	OHM	2388031
R68	1000Ω 2W	RESISTOR (MOLD COMP)	OHM	2388031
SW88	MST405N	SWITCH - ANTI-SKID TEST	ALCO	2388031
SW87	MST105D	SWITCH - ANTI-SKID	C-H	2388031
J84	(REF SHT 2)			
P84				
J88	(REF SHT 6)			
P88				
J11	(REF SHT 2A 2308000)			
P11				
J180	200277-2 (REF)	(PART OF E35)	AMP	PER W/D
	42981-1 (50 EA)	SOCKETS		
	200833-4 (2 EA)	CORNER GUIDE PINS		
P180	200835-4 (2 EA)	CORNER GUIDE SOCKETS		PER W/D
	201382-2 (2 EA)	JACKSCREW (M)		
	201382-1	CLAMP		
	201358-1	HOUSING	AMP	
J181	1-582389-1 (REF)	PART OF E35		—
P179	FC06E-8-23	PLUG	SCIN	PER W/D
P178	FC06E-8-23	PLUG	SCIN	PER W/D
P177	FC06E-8-23	PLUG	SCIN	PER W/D
P176	FC06E-8-23	PLUG	SCIN	PER W/D
CB60	J1.2-S14-CM2 (7.5)	CKT BKR - ANTI-SKID		
MT34	9543004	WHEEL DRIVEN GEN L OUTBD	GOODYEAR	2388023
MT33	9543004	WHEEL DRIVEN GEN L INBD	GOODYEAR	2388023
MT32	9543004	WHEEL DRIVEN GEN R INBD	GOODYEAR	2388023
MT31	9543004	WHEEL DRIVEN GEN R OUTBD	GOODYEAR	2388023
E31	② (REF SHT 22)			
E35	① 2318365-2	ANTI-SKID CONTROL ASSY		2388031
D846	MSZ5446-5	LIGHT-WHITE (5 VOLT)	DIALCO	2388031
	② 9543005	ANTI-SKID CONTROL	GOODYEAR	
C11	601D	CAPACITOR - 110 MFD, 50VDC	SPRAGUE	2388031
B34	9543007	SOLENOID VALVE	GOODYEAR	2388023
B33	9543007	SOLENOID VALVE	GOODYEAR	2388023
B32	9543007	SOLENOID VALVE	GOODYEAR	2388023
B31	9543007	SOLENOID VALVE	GOODYEAR	2388023

③ EFF A/P 23-007 THRU 23-014

② EFF A/P 23-003 THRU 23-011

① EFF A/P 23-012 THRU 23-014

NOTE: ALL WIRES ARE NO. 20 AWG UNLESS SHOWN OTHERWISE

LEAR JET

WIRING DIAGRAM
ANTI-SKID

2308000 A

P143 J143 K56	REF SHT 22 REF SHT 22 $901	RELAY		2318201
P P J J	RCA E-B-25 RCA E-B-25	PLUG PLUG	SCIN SCIN	
MT31 MT32 MT33 MT34	9543009 9543004	GEN R OUTBD R INBD L INBD GEN L OUTBD	GOODYEAR GOODYEAR	
R68 R68 SW88 SW87	510Ω 2W 1000Ω 2W 8567KB 8810K12	RESISTOR (MOLD COMP) RESISTOR (MOLD COMP) SWITCH - ANTI SKID TEST SWITCH - ANTI SKID	OHM OHM C-H C-H	2356031 2388031 23H603 2356031
J88 P88 J84 P84 J86 P86	MS7405N (REF SHT 2) (REF SHT 6) 			
J11 P11 J180	(REF SHT 10, 23C8011) 2.00277-2 (REF) 42981-1 (50 EA) 2.00633-4 (2 EA)	(PART OF E35) SOCKETS CORNER GUIDE PINS	AMP AMP	PER W/D
P180	2.00835-4 (4 EA) 2.01388-2 (2 EA) 2.01182-1 2.01358-1	CORNER GUIDE SOCKETS JACKSCREW (M) CLAMP HOUSING	AMP	PER W/D
J181	1-582389-1 (REF)	PART OF E35	AMP	—
P184 J184 P183 J183	(REF SHT 7) (REF SHT 7) (REF SHT 7) (REF SHT 7)			
MT34 MT33 MT32 MT31	S-3001 S-3001 S-3001 S-3001	WHEEL DRIVEN GEN L OUTBD WHEEL DRIVEN GEN L INBD WHEEL DRIVEN GEN R INBD WHEEL DRIVEN GEN R OUTBD	LEAR LEAR LEAR LEAR	2388025 2388025 2388025 2388025
E35 D546 C830	S-3000 MS25446-5 (REF SHT 8)	ANTI-SKID CONTROL ASSY LIGHT-WHITE (5 VOLT)	LEAR DIALCO	2388031 2388031
C11 B34 B33 B32 B31	601D 9543007 9543007 9543007 9543007	CAPACITOR-110 MFD, 50VDC SOLENOID VALVE SOLENOID VALVE SOLENOID VALVE SOLENOID VALVE	SPRAGUE GOODYEAR GOODYEAR GOODYEAR GOODYEAR	2388031 2388023 2388023 2388023 2388023
SYMBOL	PART NUMBER	NAME	VENDOR	INST DWG

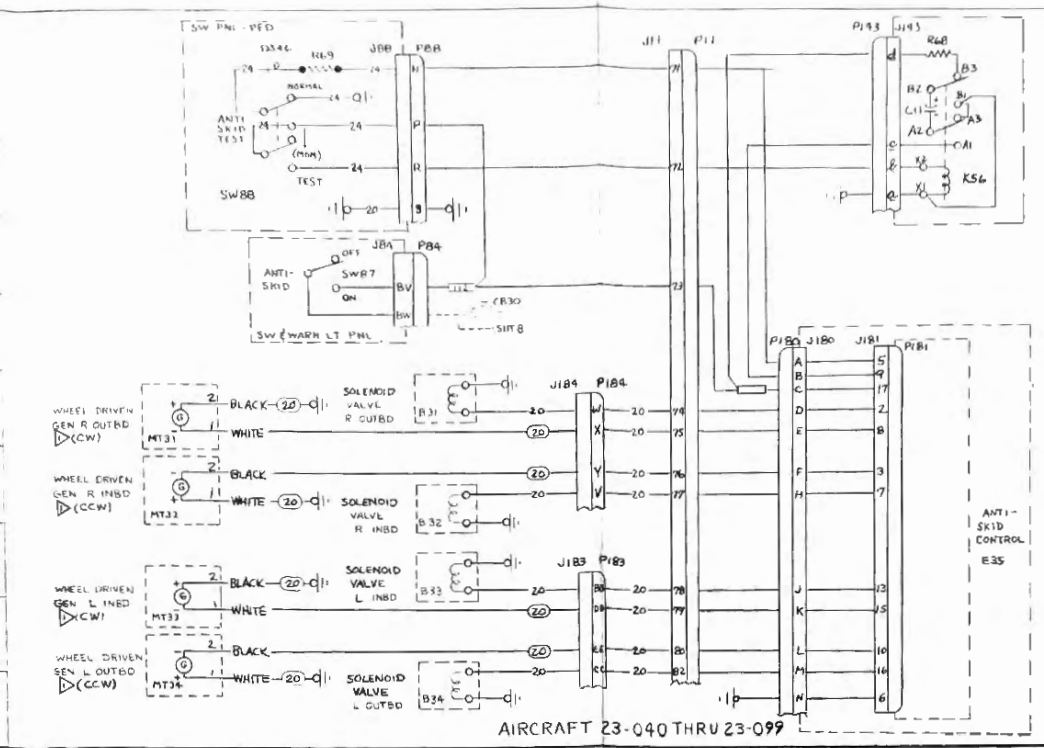

AIRCRAFT 23-040 THRU 23-099

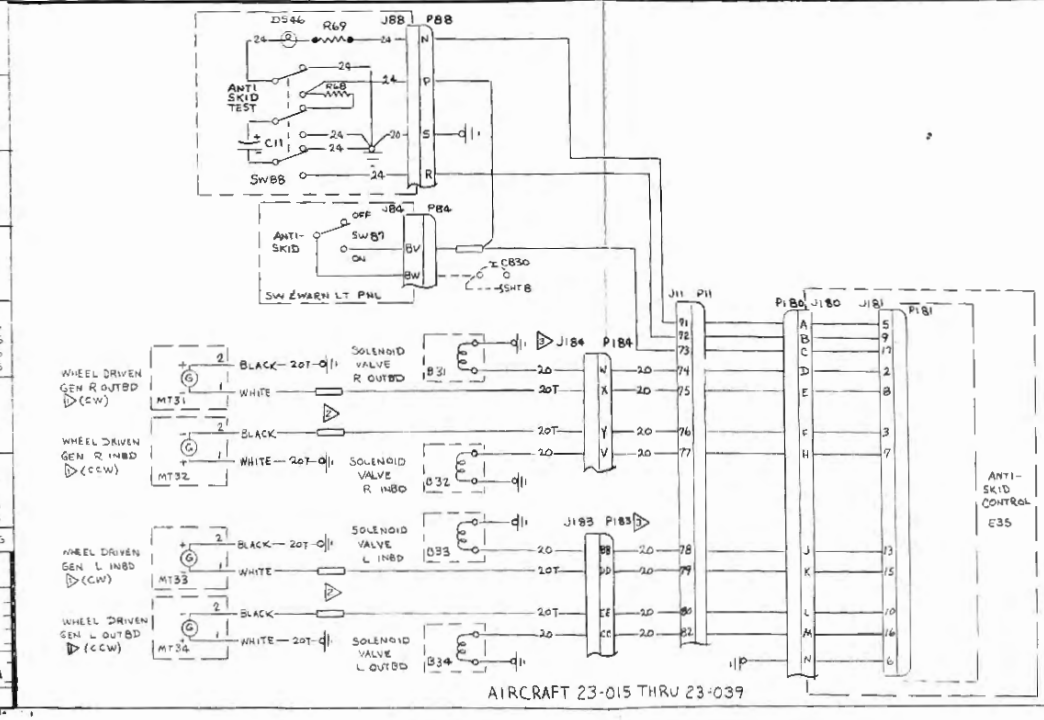

AIRCRAFT 23-015 THRU 23-039

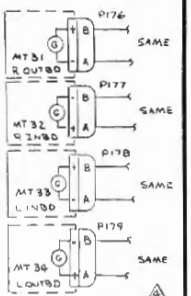

3 EFF A/P 23-028 THRU 23-099

4 EFF A/P 23-015 THRU 23-027

5 PLUG P183 & P184 EFF A/P 23-035 THRU 23-099.

6 SPLICES EFF A/P 23-015 THRU 23-034.

NORMAL ROTATION OF WHEEL AND GENERATOR SHAFT, WHEN LOOKING AT SHAFT END OF GENERATOR.

NOTE: ALL WIRES ARE NO 20 AWG UNLESS SHOWN OTHERWISE

LEAR JET — P.O. BOX 1289 WICHITA, KANSAS

	NAME	DATE
DRAWN	V ROBBINS	2-12-65
GROUP		
CHECK		
STRESS		
PROJ		
SUPERSEDES 16-63	SUPERSEDED BY	

TITLE: WIRING DIAGRAM ANTI-SKID

DWG NO 2308000 A

SCALE 1-15-66 SHEET 26.06

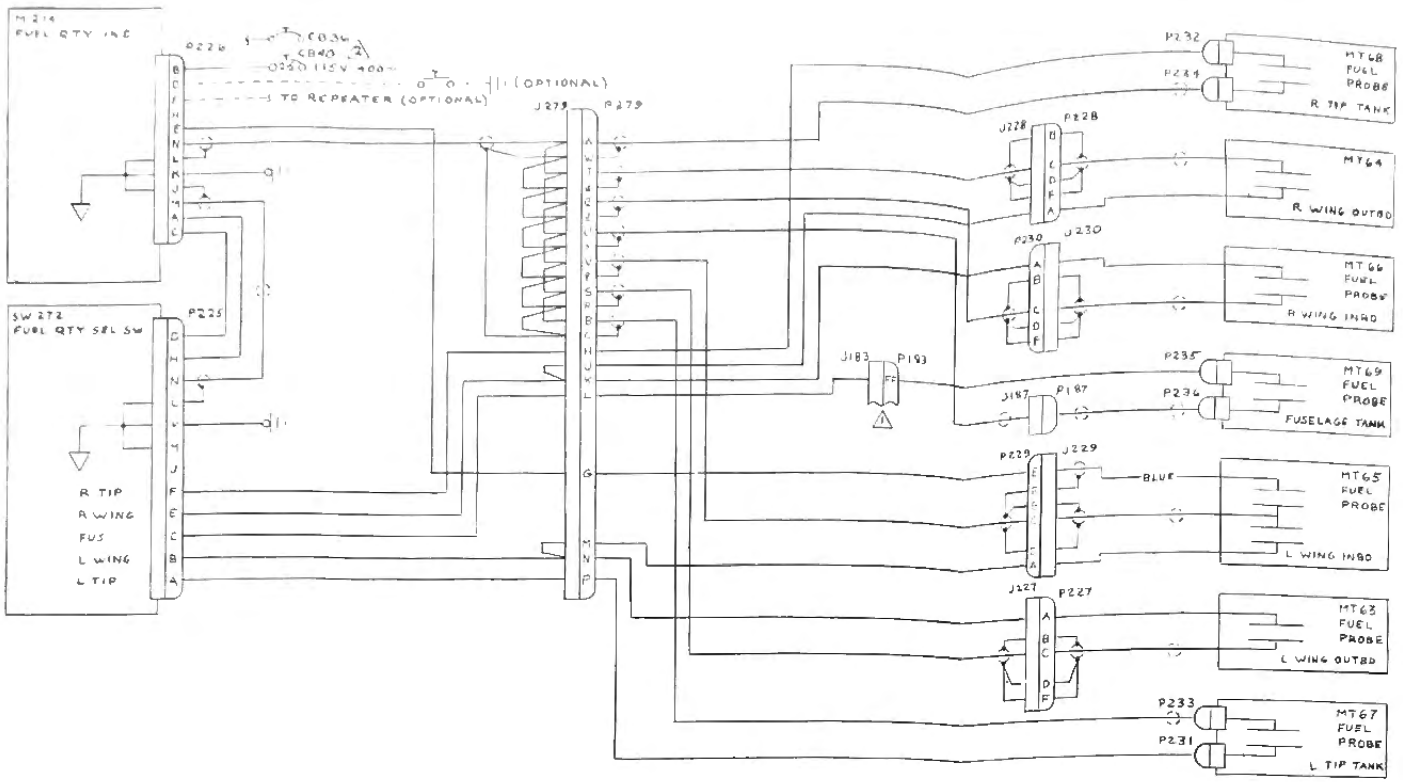

SYMBOL	PART NUMBER	NAME	VENDOR	INSTL DWG
SW272	R655B12	SELECTOR SWITCH-FUEL QTY	HONEY	2314091
P279	PT06SE-18-32P	PLUG	SCIN	PER W/D
P236	PC-601-A59		TED	
P235	PC-502-B59			
P234	PC-601-A59			
P233	PC-601-A59			
P232	PC-502-B59			
P231	PC-502-B59		TED	
P230	PT506P10-98S		SCIN	
P229	PT506P10-98S			PER W/D
P228	PT506P10-98S			2326014
P227	PT506P10-98S		SCIN	2326014
P226	165-10		AMPH	PER W/D
P225	165-10X	PLUG	AMPH	PER W/D
J187	JC-601-A59	RECPT	TED	PER/WD
P187	PC-601-A59	PLUG	TED	PER/WD
J183	(SEE SHT 7) △1			
P183	(SEE SHT 7) △1			
MT69	FG200A84	FUEL PROBE - FUS TANK	HONEY	23 6008
MT68	FG200A83	- R TIP TANK		2323036
MT67	FG200A83	- L TIP TANK		2323036
MT66	FG220A225	- R WING INBD		2326014
MT65	FG250A47	- L WING INBD		
MT64	FG220A224	- R WING OUTBD		
MT63	FG220A224	FUEL PROBE - L WING OUTBD		2326014
M214	JG402A-42	FUEL QTY INDICATOR	HONEY	23 4031
J279	PT00SE-18-32S	RECEPTACLE	SCIN	PER W/D
J230	PT07H-10-98P			2326014
J229	PT07H-10-98P			
J228	PT07H-10-98P			
J227	PT07H-10-98P	RECEPTACLE	SCIN	2326014
CB36	41-2-S14LN2 (25A)	CKT BKR	ETA	2318350
CB40	41-2-S14LN2 (25A)	CKT BKR	ETA	2318350

△2 CB36 EFF A/P 23-025 THRU 23-069.
CB40 EFF A/P 23-070 THRU 23-079 & 23-082A.

△1 P183 & J183 EFF ON AIRCRAFT 23-035 AND SUBSEQUENT.
ON AIRCRAFT 23-025 THRU 23-034 USE SPLICE IN PLACE OF P183 & J183.

NOTE:
1. ALL WIRE IS AWG #24 UNLESS OTHERWISE NOTED
2. ALL SHIELDED LEADS AND ASSOCIATED CONNECTORS ARE ISOLATED FROM AIRFRAME GND EXCEPT AS SHOWN
3. ELECTRIC CONNECTORS SUBMERGED IN FUEL TO BE POTTED PER LES 1104

LEAR JET
P.O. BOX 1290 WICHITA, KANSAS

	NAME	DATE
DRAWN	H HERMAN	2-19-65
GROUP		
CHECK	[signature]	4-15-65
STRESS		
PROJ	[signature]	4/15/65
SUPERSEDES		SUPERSEDED BY

TITLE: WIRING DIAGRAM - FUEL GAGING SYS

DWG NO 2308000 A

SCALE 1-3-64 SHEET 27-03

SW272	RG55B12	SELECTOR SWITCH FUEL QTY	HONEY	2314091
P236	PC-601-A59	PLUG	TED	PER W/D
P235	PC-502-B59			
P234	PC-601-A59			
P233	PC-601-A59			
P232	PC-502-B59			
P231	PC-502-B59	PLUG	TED	PER W/D
M214 [3]	JG402A142	FUEL QUANTITY INDICATOR	HONEY	2314091
J187	JC-601-A59	RECEPTACLE	TED	PER W/D
J183	(SEE SHT 7)			
P187	PC-601-A59	PLUG	TED	PER W/D
P183	(SEE SHT 7)			
P292	PC-601-A59	PLUG	TED	PER W/D
P291	PC-601-A59			
P290	PC-601-A59			
P289	PC-601-A59			
P288	PC-601-A59			
P287	PC-601-A59			
P286	PC-601-A59			
P285	PC-601-A59			
P284	PC-601-A59			
P283	PC-601-A59			
P282	PC-601-A59			
P281	PC-601-A59			
P280	PC-601-A59		TED	
P279	PT06SE18-32P		SCIN	
P278	PC-601-A59		TED	
P277	PC-601-A59			
P276	PC-601-A59			
P275	PC-502-B59			
P274	PC-502-B59			
P273	PC-502-B59			
P272	PC-502-B59			
P271	PC-502-B59			
P270	PC-502-B59			
P269	PC-502-B59			
P268	PC-502-B59			
P267	PC-601-B59			
P266	PC-502-B59	PLUG	TED	PER W/D
P226	165-10	PLUG	AMPH	PER W/D
P225	165-10X	PLUG	AMPH	PER W/D
MT69	FG200AB4	FUEL PROBE-FUSELAGE TANK	HONEY	[illegible]
MT68	FG200AB3	R TIP TANK		[illegible]
MT67	FG200AB3	L TIP TANK		[illegible]
MT66	FG220A225	R WING INBD		2326014
MT65	FG250A49	L WING INBD		
MT64	FG220A224	R WING OUTBD		
MT63	FG220A224	FUEL PROBE L WING OUTBD	[illegible]	[illegible]
M214 [2]	JG911A1	FUEL QUANTITY INDICATOR	HONEY	2314091
J279	[illegible]	RECEPTACLE	SCIN	PER W/D
J248	[illegible]	RECEPTACLE	TED	2326014
J247	[illegible]			
J246	[illegible]			
J245	[illegible]			
J244	[illegible]			
J243				
J242				
J241	[illegible]			
J240	[illegible]	RECEPTACLE	TED	2326014
J239	[illegible]	RECEPTACLE	TED	[illegible]
CB40	[illegible]	CIRCUIT BREAKER	[illegible]	2318350
[illegible]	[illegible]	NAME	[illegible]	INSTL DWG

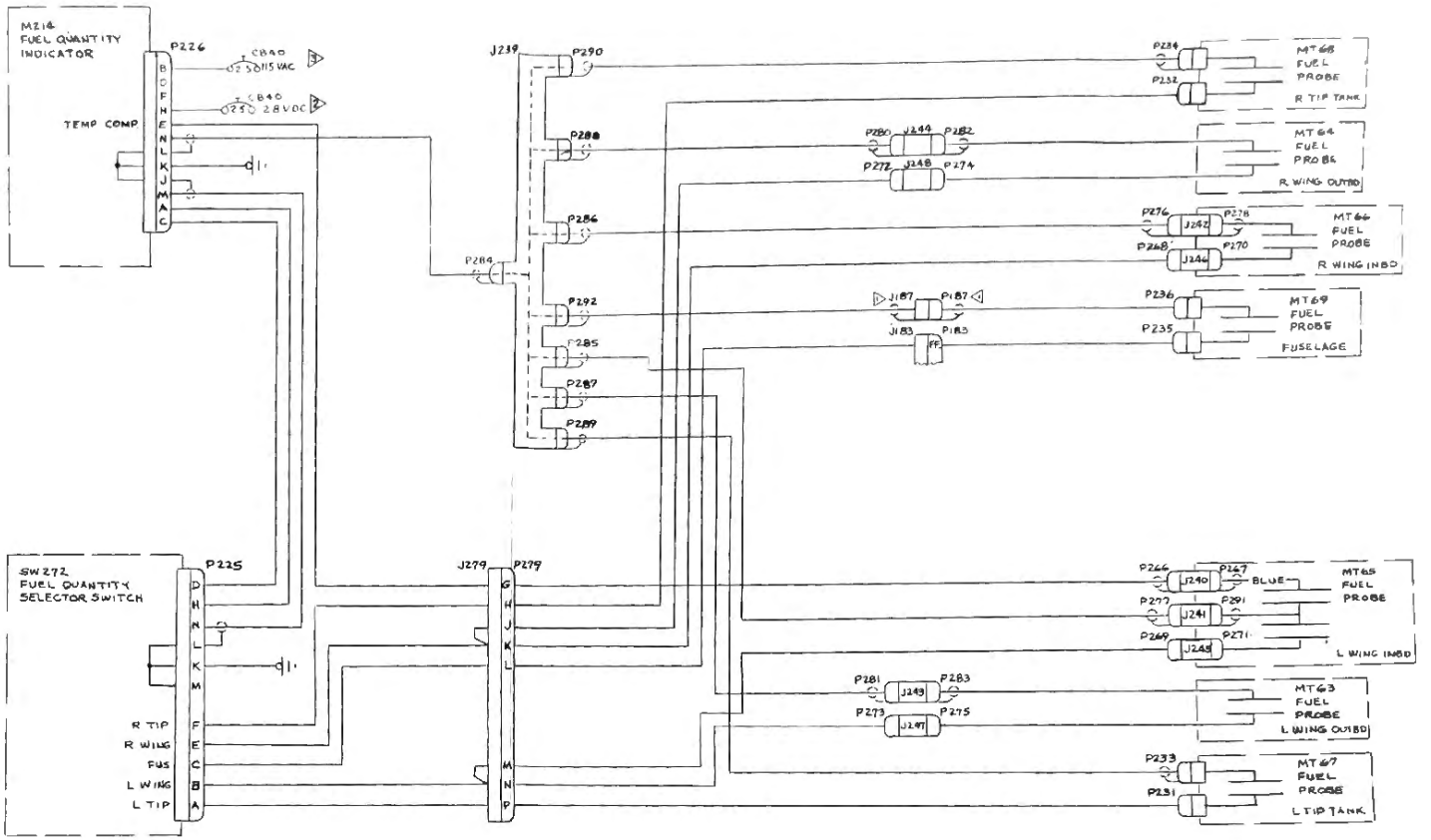

[3] EFF ON AIRCRAFT 23-080 THRU 23-089

[2] EFF ON AIRCRAFT 23-090 THRU 23-099

[1] COVER J187 & P187 WITH VINYL SLEEVE AND STRING TIE BOTH ENDS

NOTE: 1. ALL WIRE IS AWG #24 UNLESS OTHERWISE NOTED.

2. ALL SHIELDED LEADS AND ASSOCIATED CONNECTORS ARE ISOLATED FROM AIRFRAME GROUND EXCEPT AS SHOWN.

3. ELECTRIC CONNECTORS SUBMERGED IN FUEL TO BE POTTED PER LES 1104.

LEAR JET

P.O. BOX 1880 WICHITA, KANSAS

WIRING DIAGRAM
FUEL GAGING SYSTEM

2308000 A

27.05

SECTION X
WIRING DIAGRAMS - ELECTRONICS SYSTEMS

GENERAL. This section contains wiring diagrams for the electronic equipment as installed in the aircraft. For operation, maintenance, and servicing instructions on individual systems and components, refer to the applicable vendor Service Manual and Illustrated Parts Breakdown.

WIRING DIAGRAM INDEX

Title	Page
VHF Communications and RMI	10-3
Navigation Units (Primary and Secondary)	10-5
Audio and Power	10-11
ADF, DME and Radar	10-15
Transponder	10-19/10-20
AVQ-20 Weather Radar	10-21
Antennas	10-23
Directisyn (Primary and Secondary)	10-25
Vertisyn (Primary and Secondary)	10-29
Automatic Flight Control System	10-31

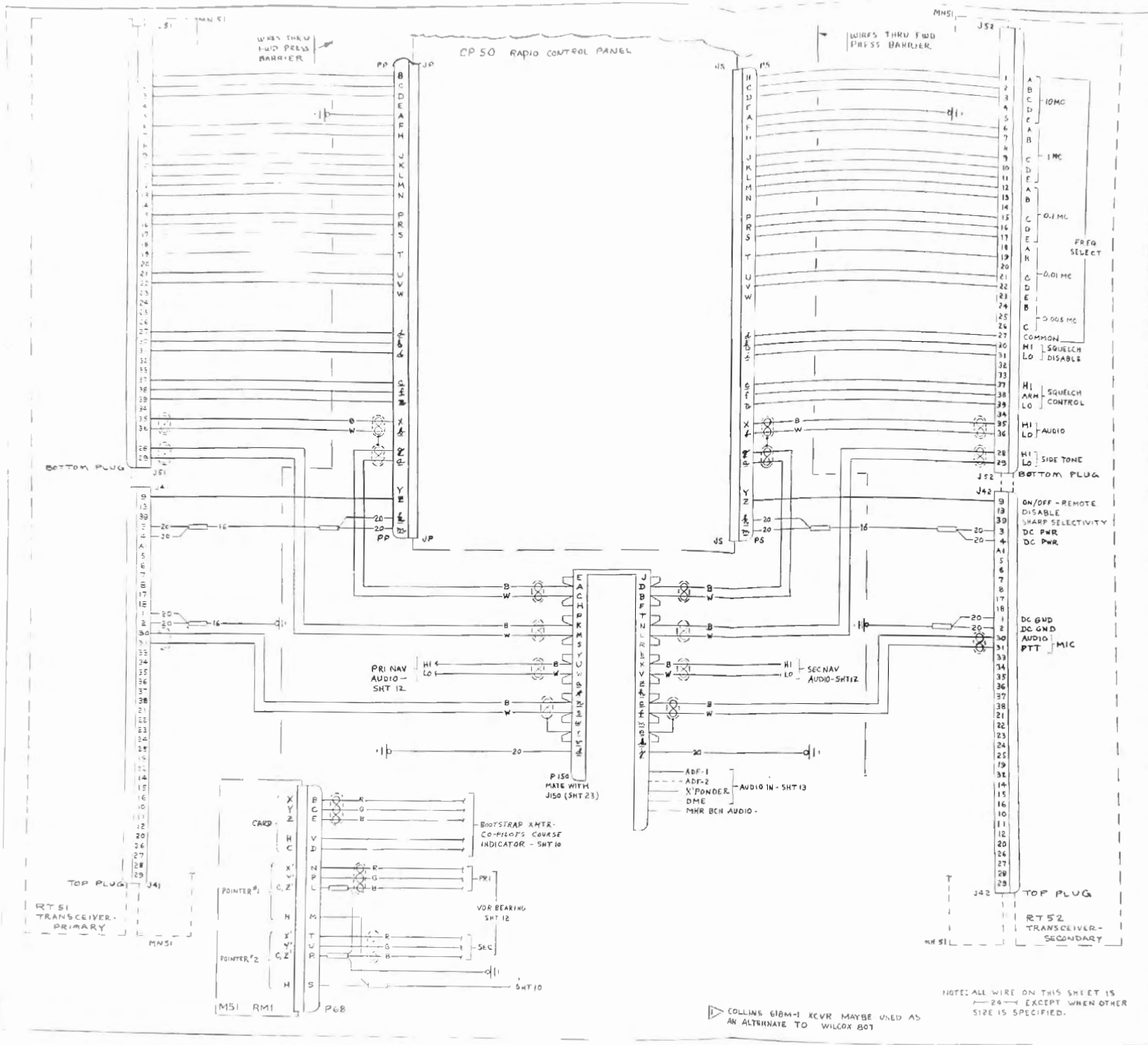

NOTE: ALL WIRE ON THIS SHEET IS —24— EXCEPT WHEN OTHER SIZE IS SPECIFIED.

1 COLLINS 618M-1 XCVR MAYBE USED AS AN ALTERNATE TO WILCOX 807

SYMBOL	PART NUMBER	NAME	VENDOR	INSTAL DWG
RT52	97607-100	TRANSCEIVER - MODEL 807	WILCOX	2318502
	522-2466-004	TRANSCEIVER - 618M-1	COLLINS	
RT51	97607-100	TRANSCEIVER MODEL 807	WILCOX	2318502
	522-2466-004	TRANSCEIVER - 618M-1	COLLINS	
P150	(SEE SHEET 23)			
	201345-1	HOUSING		
	42981-1 (104 EA)	SOCKET		
PS	201221-1	CLAMP	AMP	PER W/D
	201388-2	JACKSCREWS (M)		
	201389-2	JACKSCREWS (F)		
	201046-4 (4 EA)	CORNER GUIDE PINS		
	201345-1	HOUSING		
PP	42981-1 (104 EA)	SOCKETS	AMP	PER W/D
	201221-1	CLAMP		
	201388-2	JACKSCREWS (M)		
	201389-2	JACKSCREWS (F)		
	201047-4 (4 EA)	CORNER GUIDE SOCKETS		
JS	PART OF CP50	RECPT	—	—
JP	PART OF CP50	RECPT	—	—
MN51	(SEE SHEET 10)	RACK NOSE	—	—
P68	M$3106A-22-14S	PLUG	—	PER W/D
	M$3057-12B	CABLE CLAMP		
	AN3420-12A	SLEEVE		
	AN3420-8A	SLEEVE		
M51	ID-250A ARN	RADIO MAG INDICATOR	—	2318050
J52	BOTTOM	DPX2-M$-40W1$40W1$-338-0003 WITH ONE 249-1390-00 INSERT SAME AS J42 & J52 (PART OF MN51)	—	—
J42	TOP HALF		—	—
J51	BOTTOM		—	—
J41	TOP HALF		—	—
CP50	(SEE SHEET 9)	CONTROL PANEL		

LEAR-JET

P.O. BOX 1280 WICHITA, KANSAS

	NAME	DATE
DRAWN	OPHEIM	3-12-63
GROUP	OPHEIM	3-12-63
CHECK	[signature]	3-13-63
STRESS		
PROJ	[signature]	

SUPERSEDES — SUPERSEDED BY

TITLE: WIRING DIAGRAM - VHF COMMUNICATION & RMI

DWG NO 2308000 E

SCALE NONE — SHEET 11.00 OF 25

SYMBOL	PART NUMBER	NAME	VENDOR	INSTAL DWG
RT52	97607-100	TRANSCEIVER - MODEL 807	WILCOX	2318220
RT51	97607-100	TRANSCEIVER - MODEL 807	WILCOX	2318220
P150	(SEE SHEET 3)			
	201345-1	HOUSING		
	42981-1 (104 EA)	SOCKET		
PS	201221-1	CLAMP	AMP	PER W/D
	201388-2	JACKSCREWS (M)		
	201389-2	JACKSCREWS (F)		
	201046-4 (4 EA)	CORNER GUIDE PINS		
	201345-1	HOUSING		
PP	42981-1 (104 EA)	SOCKETS	AMP	PER W/D
	201221-1	CLAMP		
	201388-2	JACKSCREWS (M)		
	201389-2	JACKSCREWS (F)		
	201047-4 (4 EA)	CORNER GUIDE SOCKETS		
JS	PART OF CP50	RECP	—	—
JP	PART OF CP50	RECP	—	—
MN51	(SEE SHEET 8)	RACK - NOSE	—	—
J52	BOTTOM	DPX2-KS-40W1S40W1S-335-0003 WITH ONE 249-1390-00 INSERT SAME AS J42 & J52 (PART OF MN51)	—	—
J42	TOP HALF		—	—
J51	BOTTOM		—	—
J41	TOP HALF		—	—
CP50	(SEE SHEET 9)	CONTROL PANEL	—	—

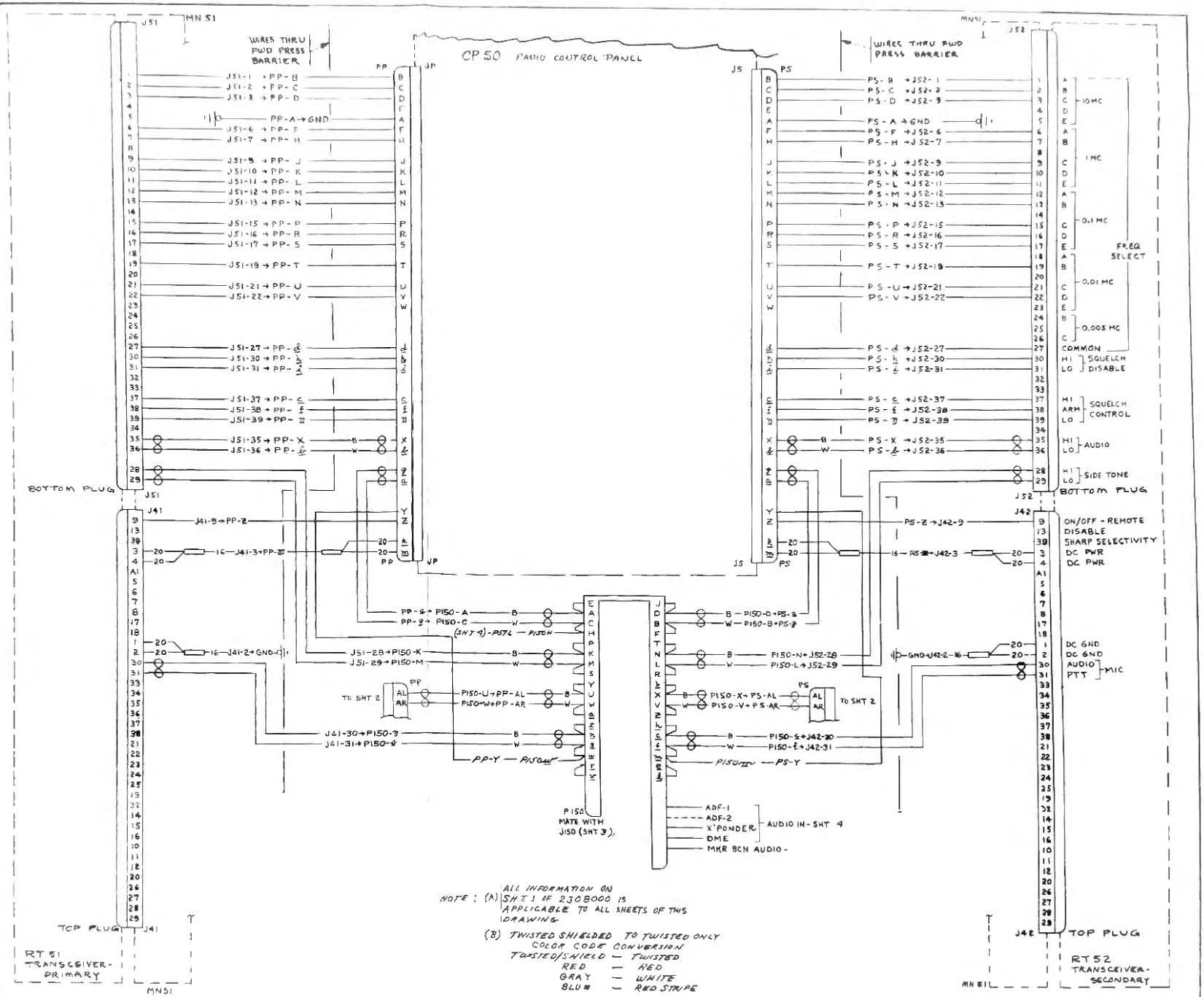

NOTE: (A) ALL INFORMATION ON SHT 1 OF 2308000 IS APPLICABLE TO ALL SHEETS OF THIS DRAWING.

(B) TWISTED SHIELDED TO TWISTED ONLY
COLOR CODE CONVERSION
TWISTED/SHIELD — TWISTED
RED — RED
GRAY — WHITE
BLU — RED STRIPE

NOTE: ALL WIRE ON THIS SHEET IS —24— EXCEPT WHEN OTHER SIZE IS SPECIFIED.

LEAR-JET

P. O. BOX 1280
WICHITA, KANSAS

	NAME	DATE
DRAWN	QUIATT	
GROUP		
CHECK		
STRESS		
PROJ	K47	

TITLE: WIRING DIAGRAM - VHF COMMUNICATION

DWG NO 2308011 A

SCALE NONE SHEET 1.00

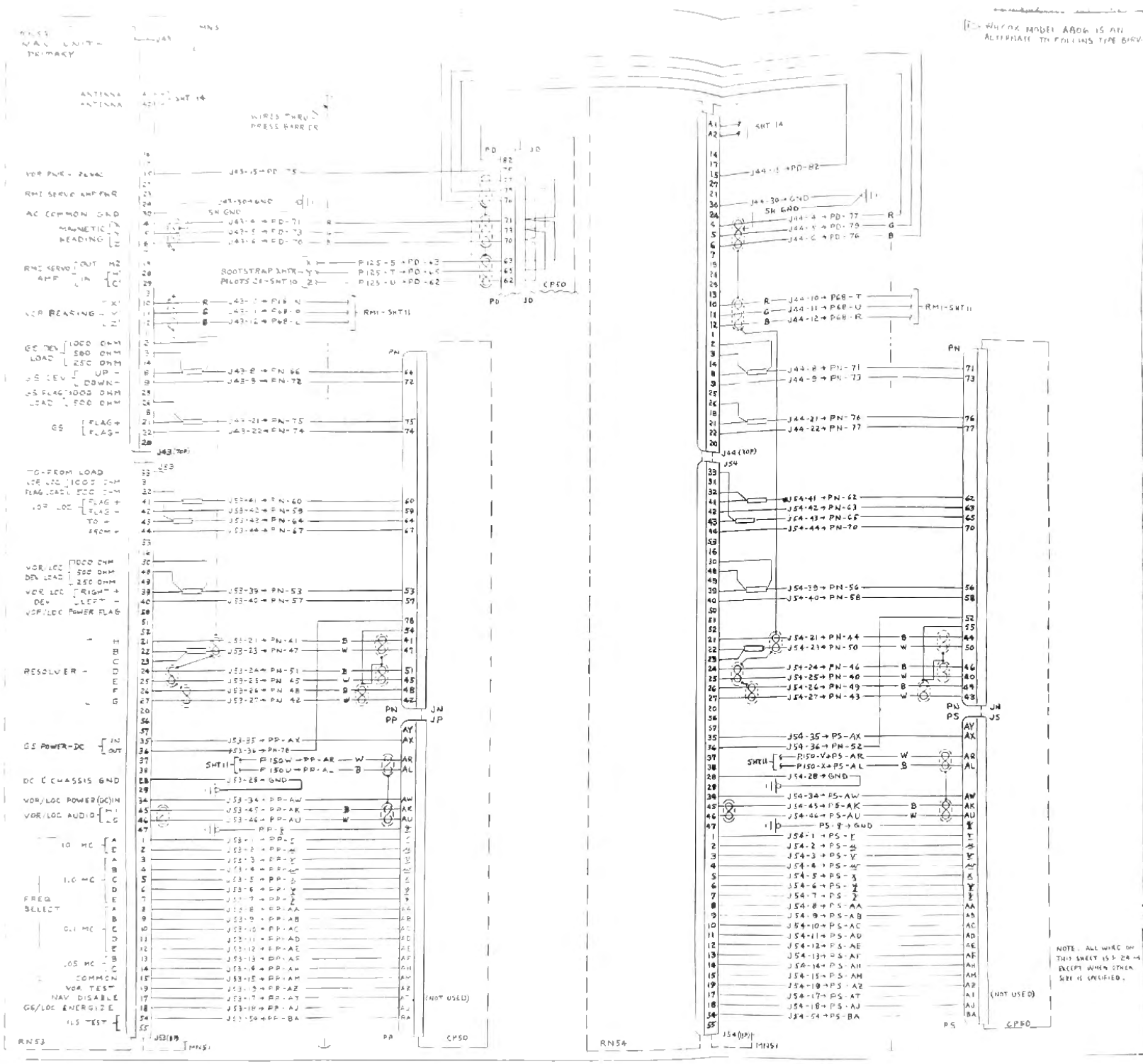

NOTE: ALL WIRE ON THIS SHEET IS 5-24-4 EXCEPT WHEN OTHER SIZE IS SPECIFIED.

SYMBOL	PART NUMBER	NAME	CONDOR	NOTAL DWG
RN54	97606-202 522-2450-013	NAV UNIT - A806 NAV UNIT - 51RV-1	WILCOX COLLINS	2318502 2318502
RN53	97606-202 522-2450-013	NAV UNIT - A806 NAV UNIT - 51RV-1	WILCOX COLLINS	2318502 2318502
PN	(SHT 10)	PLUG		
PS	(SHT 11)	PLUG		
PP	(SHT 11)	PLUG		
PD	(SHT 10)	PLUG		
MN51	(SEE SHEET 10)	RACK - NOSE		
J54 J44 J53 J43	DPX2-CA-32V12S 57S -338-0002 WITH TWO 249-1330-00 INSERTS (SAME AS J54 & J44)	(PART OF MN51)	CANNON	
JD	(PART OF CP50)			
JN	(PART OF CP50)			
JS	(PART OF CP50)			
JP	(PART OF CP50)			
CP50	(SEE SHEET 9)	CONTROL PANEL		

LEAR-JET

P.O. BOX 1280
WICHITA KANSAS

	NAME	DATE
DRAWN	PHEIM	3-12-63
CHECK	PHEIM	3-12-63
STRESS		
PROJ		

TITLE: WIRING DIAGRAM - NAV UNITS NO 1 & 2

DWG NO 2308000 E

SCALE NONE

SHEET 2 OF 23

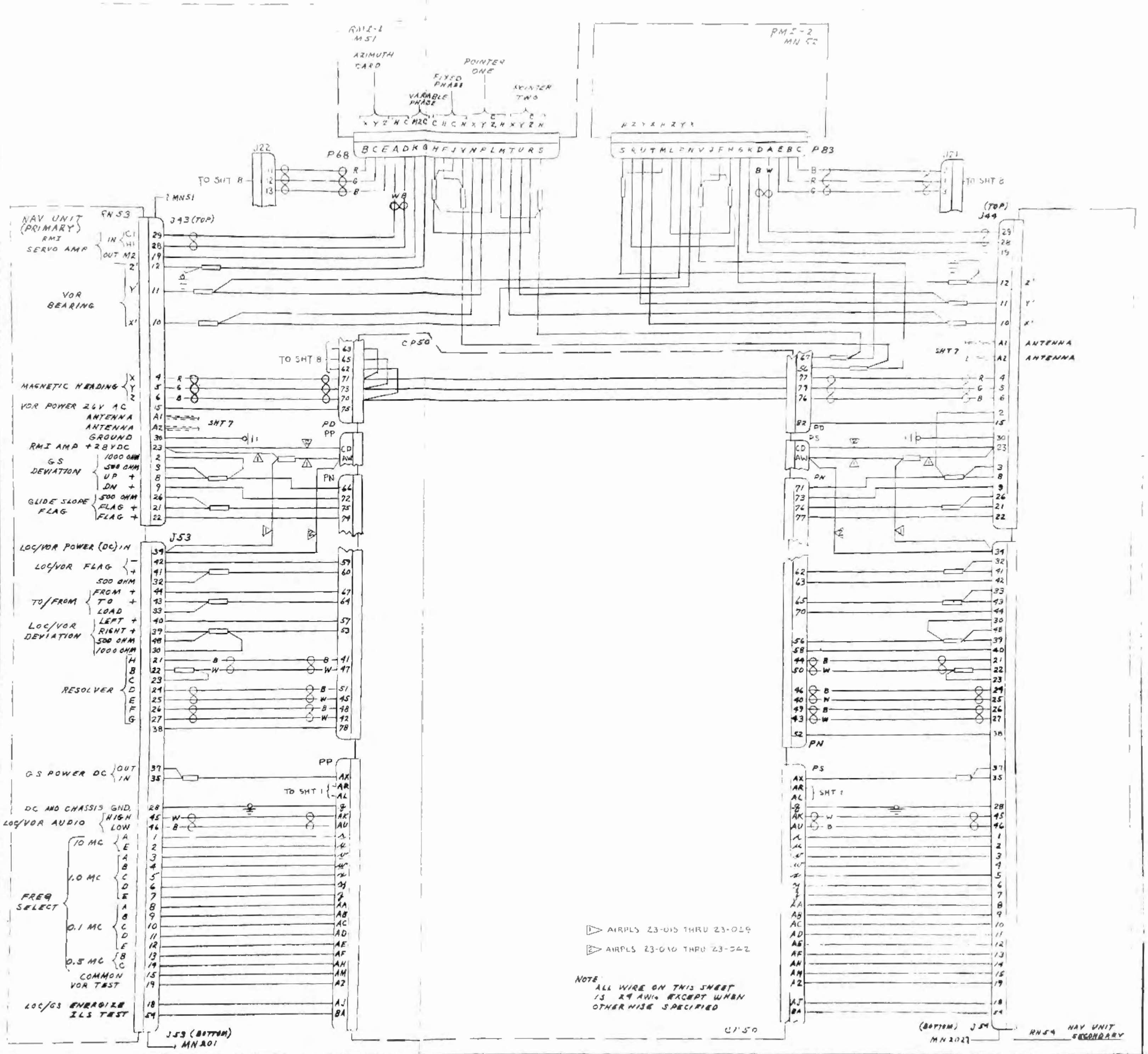

SYMBOL	PART NUMBER	NAME	VENDOR	INST DWG
RN54	97606-202	NAV UNIT A 806	WILCOX	2318220
RN53	97606-202	NAV UNIT A 806	WILCOX	2318220
PN	(SHT 8)	PLUG		
PS	(SHT-1)	↓		
PF	(SHT-1)			
PD	(SHT 8)			
-202	2318220	RACK NOSE		2318202
-201	2318220	RACK NOSE		2318202
J54, J44, J53, J43	DPX2-CA-32W2 $ 57$ 338-0002 WITH TWO 249-1390-00 INSERT (SAME AS J54 & J44)	PART OF MN 57	CANNON	
JD	(PART OF CP50)			
JN				
JS				
JP				
CP50	(SEE SHT 9)			
P83	MS 3106 A-22-14S	PLUG		PER W/O
	MS 3057-12-B	CABLE CLAMP		
	AN-3420-12-B	SLEEVE		
	AN-3420-8-A	SLEEVE		
P68	(SAME AS P83)			PER W/O
M52	2108	RADIO MAGNETIC IND (SERVOED)	ALLEN	2314091
M51	2108	" " " "	"	2314091

LEAR JET
P.O. BOX 1280 WICHITA KANSAS

WIRING DIAGRAM NAV UNITS & RMI PRIMARY AND SECONDARY

DRAWN GVIATT S.L. 2-1-65

DWG NO 2308011 A

1-15-66 SHEET 2 OF 1

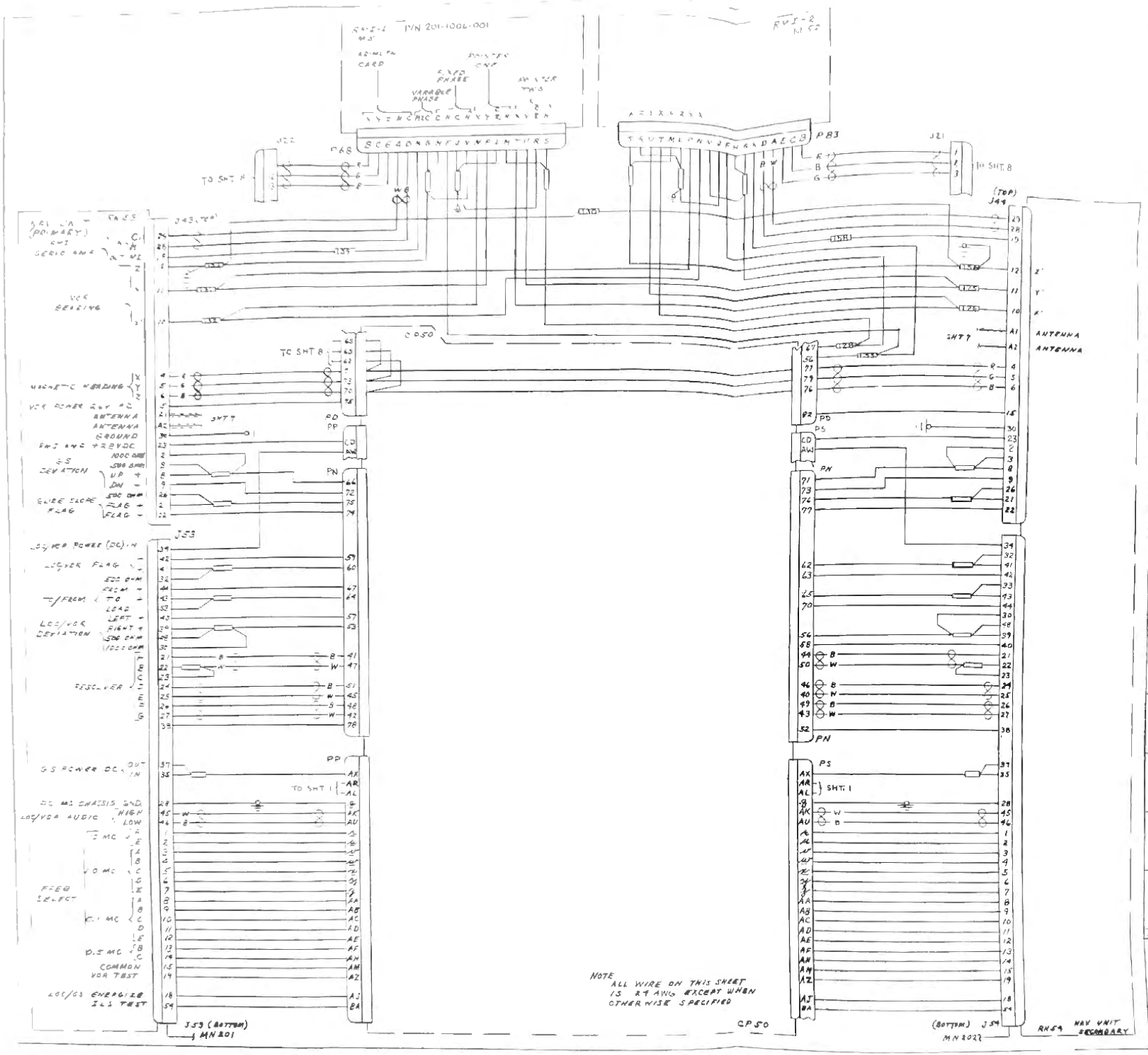

SYMBOL	PART NUMBER	NAME	VENDOR	INST DWG
RN54	97606-202	NAV UNIT A806	WILCOX	2318220
RN53	97606-202	NAV UNIT A806	WILCOX	2318220
PN PS PP PD	(SHT 8) (SHT-1) (SHT-1) (SHT 8)	PLUG		
MN202 MN201	2318220 2318220	RACK NOSE RACK NOSE		2318202 2318202
J54 J44 J53 J43	DPX2-CA-32W2 & 57S 338-0002 WITH TWO 249-1390-00 INSERT (SAME AS J54 & J44)	PART OF MN51	CANNON	
J22 J21	(SEE SHT 8) (SEE SHT 8)			
CP50	(SEE SHT 9)			
P83 P68	MS 3106A-22-14S MS 3057-12-B AN-3420-12-B AN-3420-8-A (SAME AS P83)	PLUG CABLE CLAMP SLEEVE SLEEVE		PER W/D PER W/D
M52 M51	2108 2108	RADIO MAGNETIC IND (SERVOED) " " " "	ALLEN "	2314091 2314091

LEAR JET

P.O. BOX 1900 WICHITA, KANSAS

	NAME	DATE
DRAWN	OVIATT G.I.	2-3-65
GROUP	[signature]	2-3-65
CHECK	[signature]	2-3-65
STRESS		
PROJ	[signature]	1-2
SUPERSEDES		SUPERSEDED BY

TITLE: WIRING DIAGRAM NAV UNITS & RMI PRIMARY AND SECONDARY

DWG NO 2308011 A

SCALE 1-15-66 SHEET 2:02

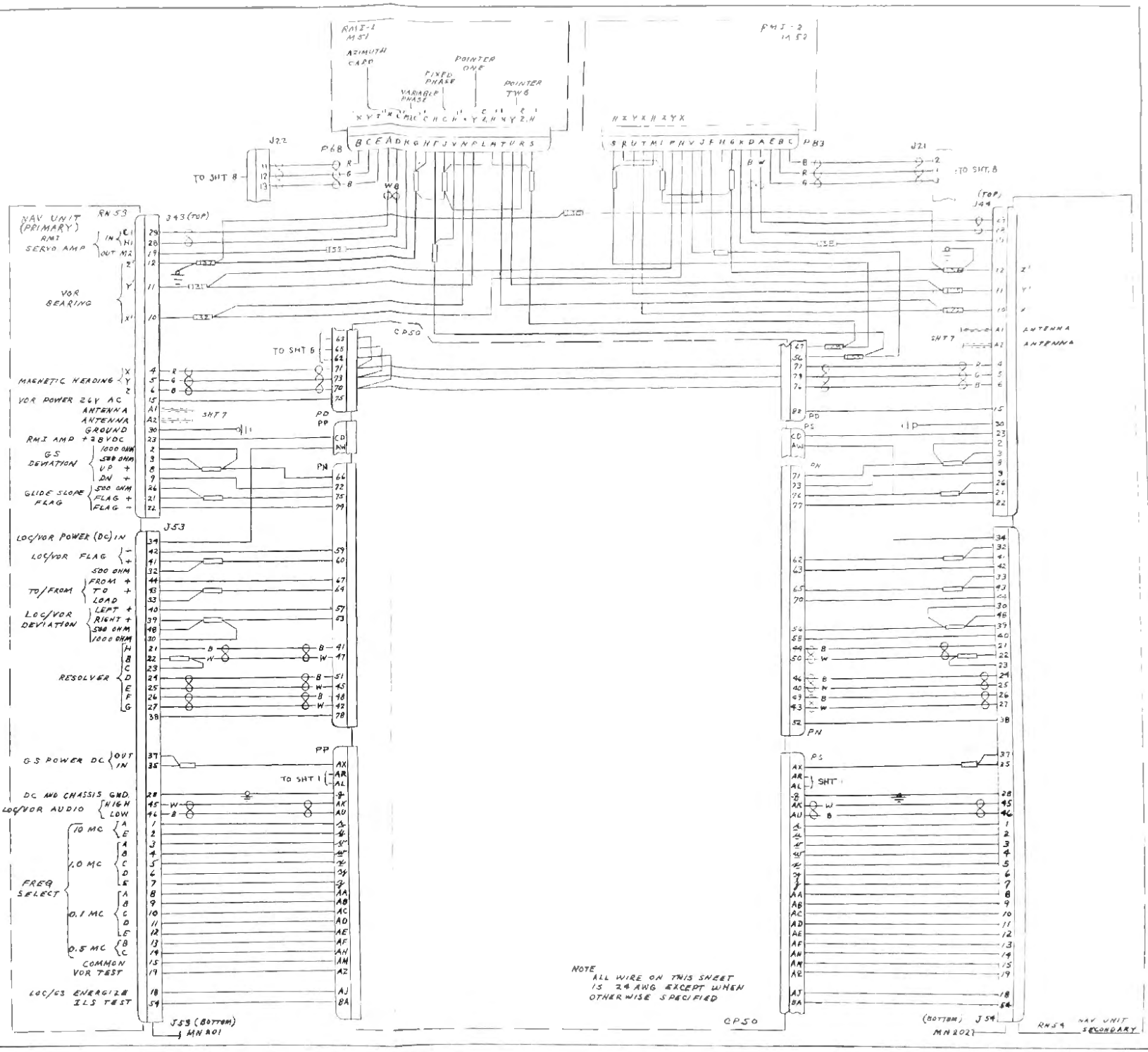

SYMBOL	PART NUMBER	NAME	VENDOR	INST DWG
RN54	97606-302	NAV UNIT A806	WILCOX	2318220
RN53	97606-202	NAV UNIT A806	WILCOX	2318220
PN	(SHT 8)	PLUG		
PS	(SHT 1)			
PP	(SHT 7)			
PD	(SHT 8)			
MP202	2318220	RACK NOSE		2318202
MP201	2318220	RACK NOSE		2318202
J54 J44	DPX2-CA-32W28 STS 338-0002 WITH TWO 249-1390-00 INSERTS (SAME AS J54 & J44)	PART OF MN 57	CANNON	
J53 J43				
J22	(SEE SHT 8)			
J21	(SEE SHT 8)			
CP50	(SEE SHT 9)			
P83	MS 3106A-22-14S	PLUG		PER W/D
	MS 3057-12-8	CABLE CLAMP		
	AN-3420-12-8	SLEEVE		
	AN-3420-8-A	SLEEVE		
P68	(SAME AS P83)			PER W/D
MS2	2108	RADIO MAGNETIC IND (SERVOED)	ALLEN	2314091
MS1	2108	" " " "	"	2314091

NOTE
ALL WIRE ON THIS SHEET IS 24 AWG EXCEPT WHEN OTHERWISE SPECIFIED

LEAR JET

WIRING DIAGRAM
NAV UNITS - RMI
PRIMARY AND SECONDARY

2308011 A

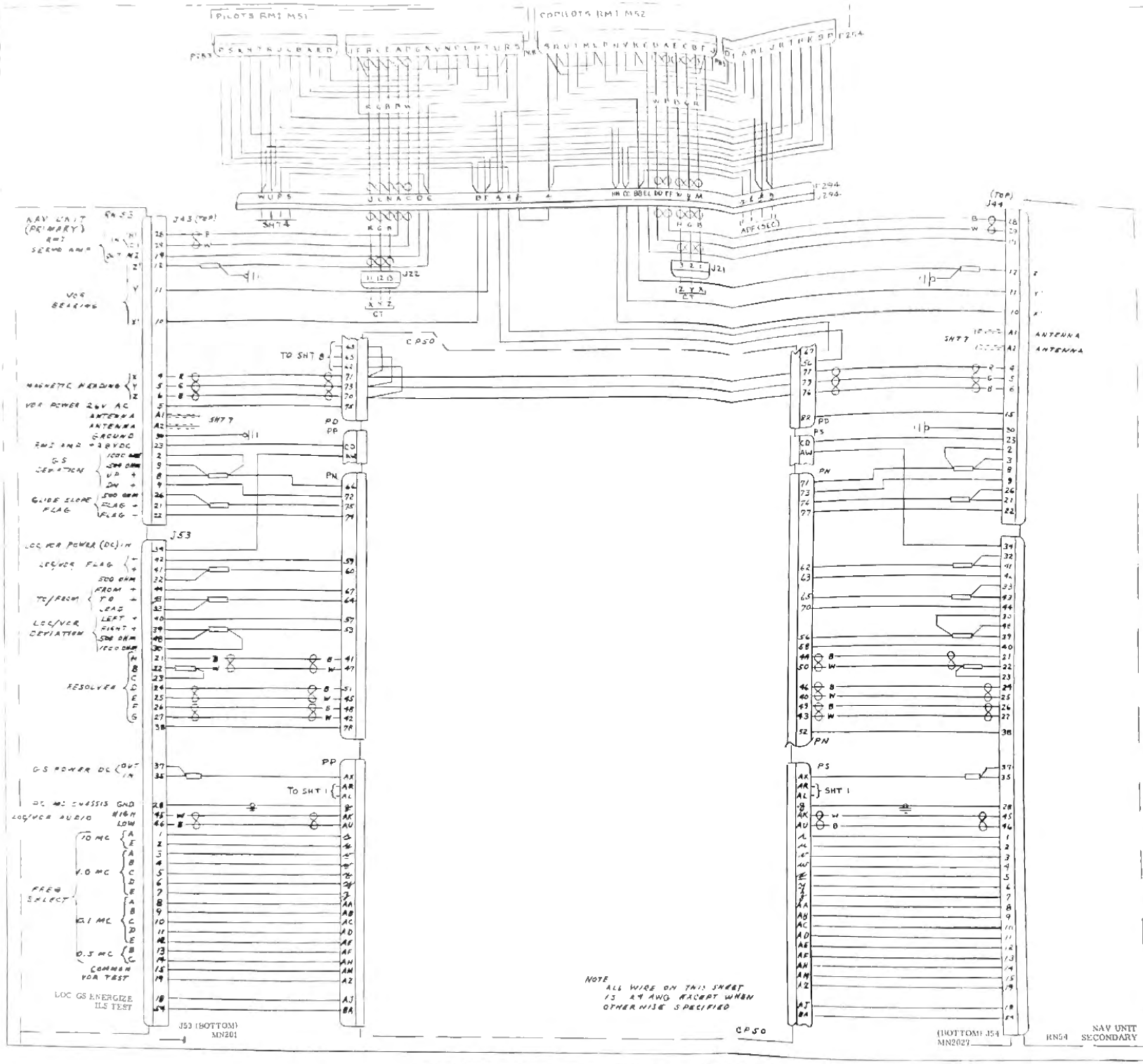

SYMBOL	PART NUMBER	NAME	VENDOR	INST DWG
RN54	97606-202	NAV UNIT A 806	WILCOX	2318220
RN53	97606-202	NAV UNIT A 806	WILCOX	2318220
PN PS PP PD	(SHT 8) (SHT -1) (SHT -1) (SHT -8)	PLUG		
MN 202 MN 201	2318220 2318220	RACK NOSE RACK NOSE		2318202 2318202
J54 J44 J53 J43	DPX2-CA-32WES 57S 338-0002 WITH TWO 249-1390-00 INSERT (SAME AS J54 & J44)	PART OF MN 57	CANNON	
J22 J21	(SEE SHT 8) (SEE SHT 8)			
P294 J294	5-803-3TSNL 5-803-4FPOR	PLUG RECEPTACLE	— —	PER W/D PER W/D
CP50	(SEE SHT 9)			
P83 P68	MS 3106 A-22-14S MS 3057-12-B AN 3420 12-B AN 3420-6-A (SAME AS P83)	PLUG CABLE CLAMP SLEEVE SLEEVE		PER W/D PER W/D
M52 M51	201-1006-001 201-1006-001	RADIO MAGNETIC IND (SERVOED) " " " "	LEAR LEAR	2314091 2314091

LEAR JET

WIRING DIAGRAM
NAV UNITS & RMI
PRIMARY AND SECONDARY

DRAWN: OVIATT G.L. 2-1-65
CHECK: 2-9-65
2308011 A
SHEET 2:06

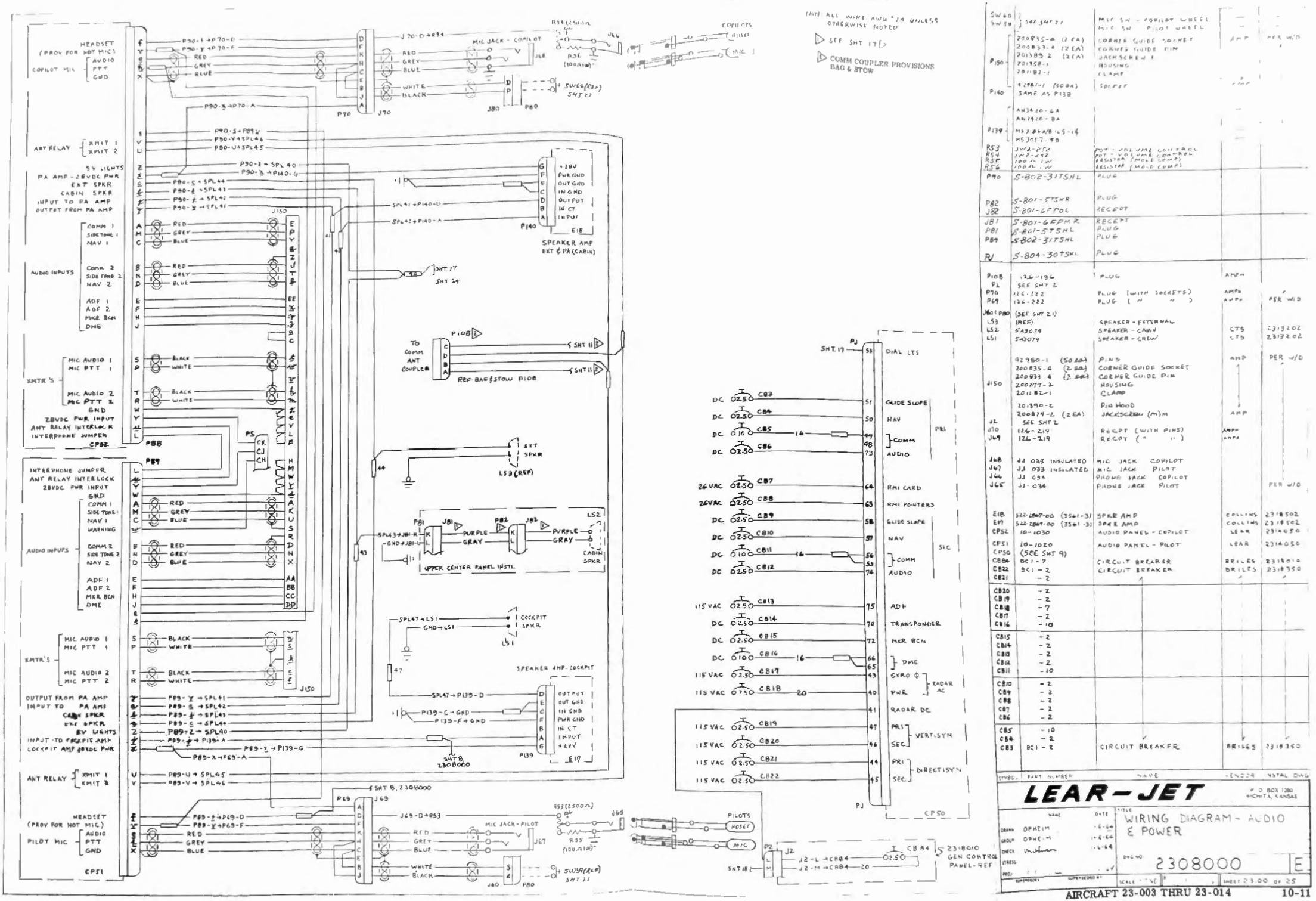

SYMBOL	PART NUMBER	NAME	VENDOR	INSTAL DWG
SW60 SW59	SEE SHT 21	MIC SW - COPILOT WHEEL MIC SW - PILOT WHEEL		
P150	200835-4 (2 EA) 200833-4 (2 EA) 201389-2 (2 EA) 201358-1 201182-1	CORNER GUIDE SOCKET CORNER GUIDE PIN JACKSCREW # HOUSING CLAMP	AMP	PER W/D
P140	42981-1 (50 EA) SAME AS P138	SOCKET	AMP	
P139	AN3420-6A AN3420-8A MS3108A/B14S-6 MS3057-8B			
RS3 RS4 RS5 RS6	5W2-250 5W2-252 100Ω 1W 100Ω 1W	POT - VOLUME CONTROL POT - VOLUME CONTROL RESISTOR (MOLD COMP) RESISTOR (MOLD COMP)		
P90	S-802-31TSNL	PLUG		
P82 J82	S-801-5TSNR S-801-6FPOL	PLUG RECEPT		
J81 P81 P89 PJ	S-801-6FPMR S-801-5TSNL S-802-31TSNL S-804-30TSNL	RECEPT PLUG PLUG PLUG		
P10B PL P70 P69 J80 (P80)	126-196 SEE SHT 2 126-222 126-222 (SEE SHT 21)	PLUG PLUG (WITH SOCKETS) PLUG (" ")	AMPH AMPH AMPH	PER W/D
LS3 LS2 LS1	(REF) 543079 543079	SPEAKER - EXTERNAL SPEAKER - CABIN SPEAKER - CREW	CTS CTS	2313202 2313202
J150	42980-1 (50 EA) 200835-4 (2 EA) 200833-4 (2 EA) 200277-2 201182-1 201390-2 200834-2 (2 EA) SEE SHT 2	PINS CORNER GUIDE SOCKET CORNER GUIDE PIN HOUSING CLAMP PIN HOOD JACKSCREW (M)M	AMP AMP	PER W/D
J2 J70 J69	126-219 126-219	RECPT (WITH PINS) RECPT (" ")	AMPH AMPH	
J68 J67 J66 J65	JJ 033 INSULATED JJ 033 INSULATED JJ 034 JJ-034	MIC JACK COPILOT MIC JACK PILOT PHONE JACK COPILOT PHONE JACK PILOT		PER W/D
E18 E17 CPS2 CPS1 CPSO CB84 CB22 CB21	522-2847-00 (3561-3) 522-2847-00 (3561-3) 10-1030 10-1020 (SEE SHT 9) BC1-2 BC1-2 -2	SPKR AMP SPKR AMP AUDIO PANEL - COPILOT AUDIO PANEL - PILOT CIRCUIT BREAKER CIRCUIT BREAKER	COLLINS COLLINS LEAR LEAR BRILES BRILES	2318502 2318502 2314050 2314050 2318010 2318350
CB20 CB19 CB18 CB17 CB16	-2 -2 -7 -2 -10			
CB15 CB14 CB13 CB12 CB11	-2 -2 -2 -2 -10			
CB10 CB9 CB8 CB7 CB6	-2 -2 -2 -2 -2			
CB5 CB4 CB3	-10 -2 BC1-2	CIRCUIT BREAKER	BRILES	2318350

LEAR-JET
P.O. BOX 1280 WICHITA, KANSAS

	NAME	DATE
DRAWN	OPHEIM	1-6-64
GROUP	OPHEIM	1-6-64
CHECK		1-6-64
STRESS		
PROJ		
SUPERSEDES		
SUPERSEDED BY		

TITLE: WIRING DIAGRAM - AUDIO & POWER

DWG NO 2308000 E

SCALE NONE SHEET 23.00 OF 25

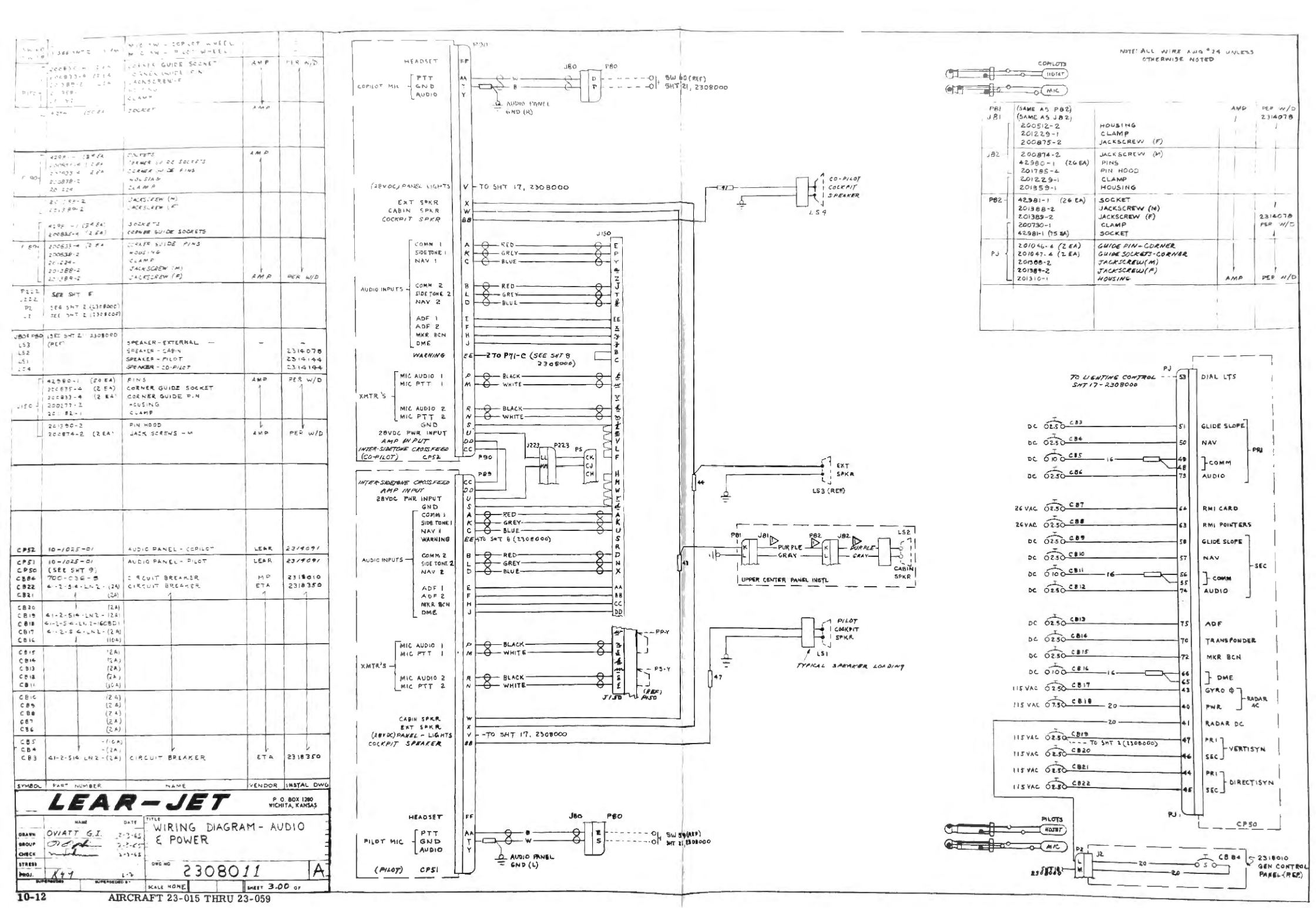

SYMBOL	PART NUMBER	NAME	VENDOR	INSTAL DWG
		MIC SW - COPILOT WHEEL MIC SW - PILOT WHEEL		
P1	200633-6 (2 EA) 200633-4 (2 EA) 201388-2 (2 EA) 200730-1 (2 EA) 42981-1 (75 EA)	CORNER GUIDE SOCKET CORNER GUIDE PIN JACKSCREW-F HOUSING CLAMP SOCKET	AMP	PER W/D
P90	42980-1 (26 EA) 200633-4 (2 EA) 201033-4 (2 EA) 200838-2 200329	SOCKETS FRAME W/ 26 SOCKETS CORNER W/ 26 PINS HOUSING CLAMP	AMP	
P80	201388-2 201389-2	JACKSCREW (M) JACKSCREW (F)		
P80	42981-1 (26 EA) 200838-4 (2 EA)	SOCKETS CORNER GUIDE SOCKETS	AMP	
P89	200633-4 (2 EA) 200838-2 201234 201388-2 201389-2	CORNER GUIDE PINS HOUSING CLAMP JACKSCREW (M) JACKSCREW (F)	AMP	PER W/D
P223 J223 P2 J2	SEE SHT 5 SEE SHT 2 (2308000) SEE SHT 2 (2308000)			
J80 P80 LS3 LS2 LS1 LS4	(SEE SHT 21 2308000 (REF))	SPEAKER - EXTERNAL SPEAKER - CABIN SPEAKER - PILOT SPEAKER - CO-PILOT	-	- 2314078 2314144 2314194
J150 P150	42980-1 (20 EA) 200633-4 (2 EA) 200633-6 (2 EA) 200277-2 201182-1	PINS CORNER GUIDE SOCKET CORNER GUIDE PIN HOUSING CLAMP	AMP	PER W/D
	201380-2 200874-2 (2 EA)	PIN HOOD JACK SCREWS - M	AMP	PER W/D
CPS2	10-1025-01	AUDIO PANEL - COPILOT	LEAR	2314091
CPS1	10-1025-01	AUDIO PANEL - PILOT	LEAR	2314091
CPS0	(SEE SHT 9)			
CB86	700-036-8	CIRCUIT BREAKER	MP	2318010
CB22	6-2-5/4-LN2-(2A)	CIRCUIT BREAKER	ETA	2318350
CB21	(2A)			
CB20	(2A)			
CB19	61-2-5/4-LN2-(2A)			
CB18	61-2-5/4-LN2-(6CB)1			
CB17	61-2-5/4-LN2-(2A)			
CB16	(10A)			
CB15	(2A)			
CB14	(2A)			
CB13	(2A)			
CB12	(2A)			
CB11	(10A)			
CB10	(2A)			
CB9	(2A)			
CB8	(2A)			
CB7	(2A)			
CB6	(2A)			
CB5	(10A)			
CB4	(2A)			
CB3	61-2-5/4 LN2-(2A)	CIRCUIT BREAKER	ETA	2318350

LEAR-JET P.O. BOX 1280 WICHITA, KANSAS

	NAME	DATE
DRAWN	OVIATT G.I.	2-2-65
GROUP		2-2-65
CHECK		2-3-65
STRESS		
PROJ.	K44	L-2

TITLE: WIRING DIAGRAM - AUDIO & POWER

DWG NO 2308011 A

SCALE NONE SHEET 3.00 OF

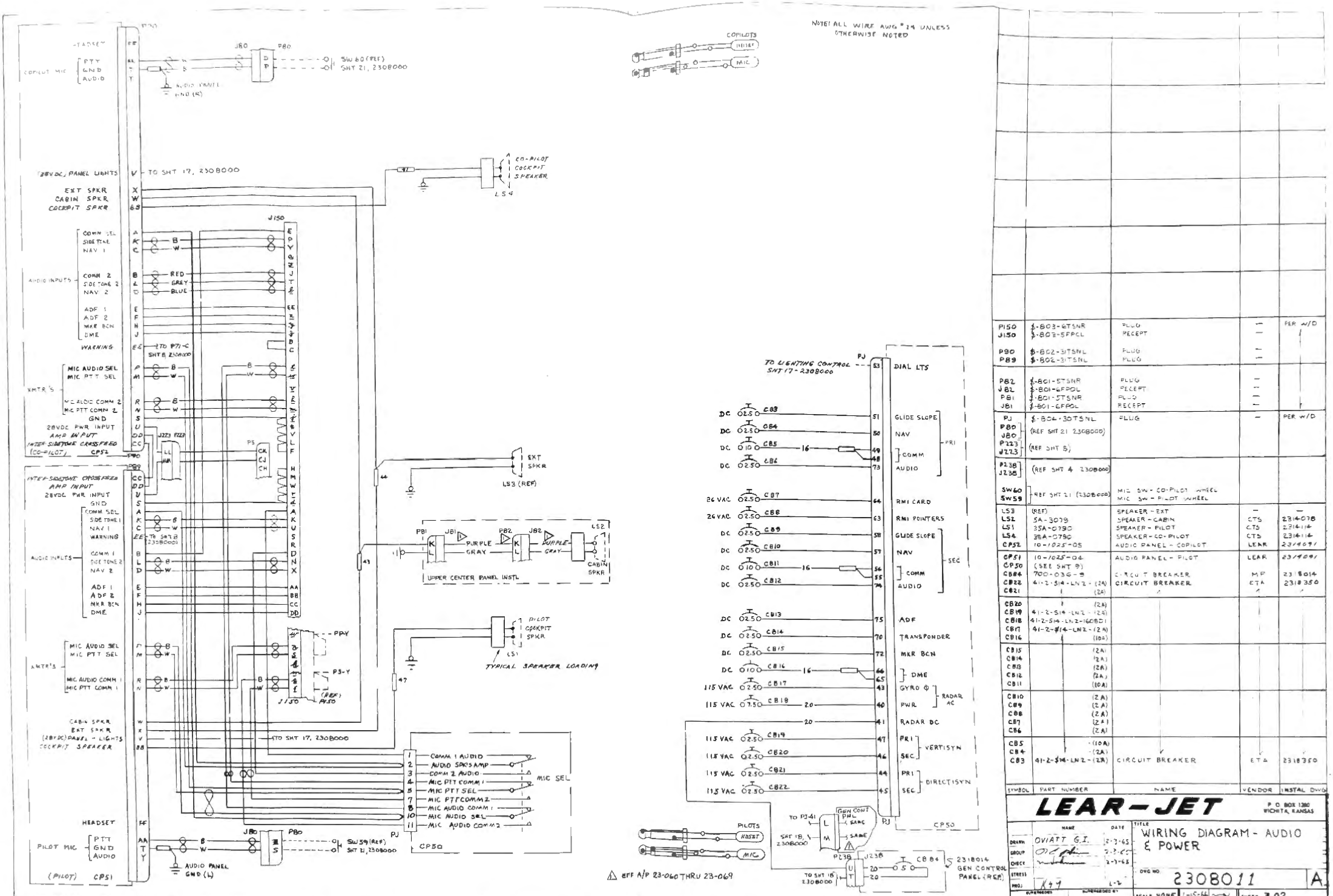

SYMBOL	PART NUMBER	NAME	VENDOR	INSTAL DWG
P150	$-803-6TSNR	PLUG	—	PER W/D
J150	$-803-6SPCL	RECEPT	—	
P80	$-802-3TSNL	PLUG	—	
P89	$-802-3TSNL	PLUG	—	
P82	$-801-5TSNR	PLUG	—	
J82	$-801-6PCL	RECEPT	—	
P81	$-801-5TSNR	PLUG	—	
J81	$-801-6PCL	RECEPT	—	
PJ	$-804-30TSNL	PLUG	—	PER W/D
P80 J80 P223 J223	(REF SHT 21 2308000) (REF SHT 5)			
P238 J238	(REF SHT 4 2308000)			
SW60 SW59	REF SHT 21 (2308000)	MIC SW - CO-PILOT WHEEL MIC SW - PILOT WHEEL		
LS3	(REF)	SPEAKER - EXT	—	—
LS2	5A-3079	SPEAKER - CABIN	CTS	2314078
LS1	3SA-0790	SPEAKER - PILOT	CTS	2314114
LS4	3SA-0790	SPEAKER - CO-PILOT	CTS	2314114
CP52	10-1025-05	AUDIO PANEL - COPILOT	LEAR	231-4091
CP51	10-1025-04	AUDIO PANEL - PILOT	LEAR	231-4091
CP50	(SEE SHT 9)			
CB84	700-036-8	CIRCUIT BREAKER	MP	2318014
CB22	41-2-514-LN2-(2A)	CIRCUIT BREAKER	ETA	2318350
CB21	(2A)	"	"	"
CB20	(2A)			
CB19	41-2-514-LN2-(2A)			
CB18	41-2-514-LN2-160D1			
CB17	41-2-514-LN2-(2A)			
CB16	(10A)			
CB15	(2A)			
CB14	(2A)			
CB13	(2A)			
CB12	(2A)			
CB11	(10A)			
CB10	(2A)			
CB9	(2A)			
CB8	(2A)			
CB7	(2A)			
CB6	(2A)			
CB5	(10A)			
CB4	(2A)			
CB3	41-2-5M-LN2-(2A)	CIRCUIT BREAKER	ETA	2318350

LEAR-JET

P. O. BOX 1280 WICHITA, KANSAS

	NAME	DATE
DRAWN	OVIATT G.I.	2-3-65
GROUP		2-3-65
CHECK		2-3-65
STRESS		
PROJ		

TITLE: WIRING DIAGRAM - AUDIO & POWER

DWG NO. 2308011 A

SCALE NONE 1-15-66 SHEET 3.02

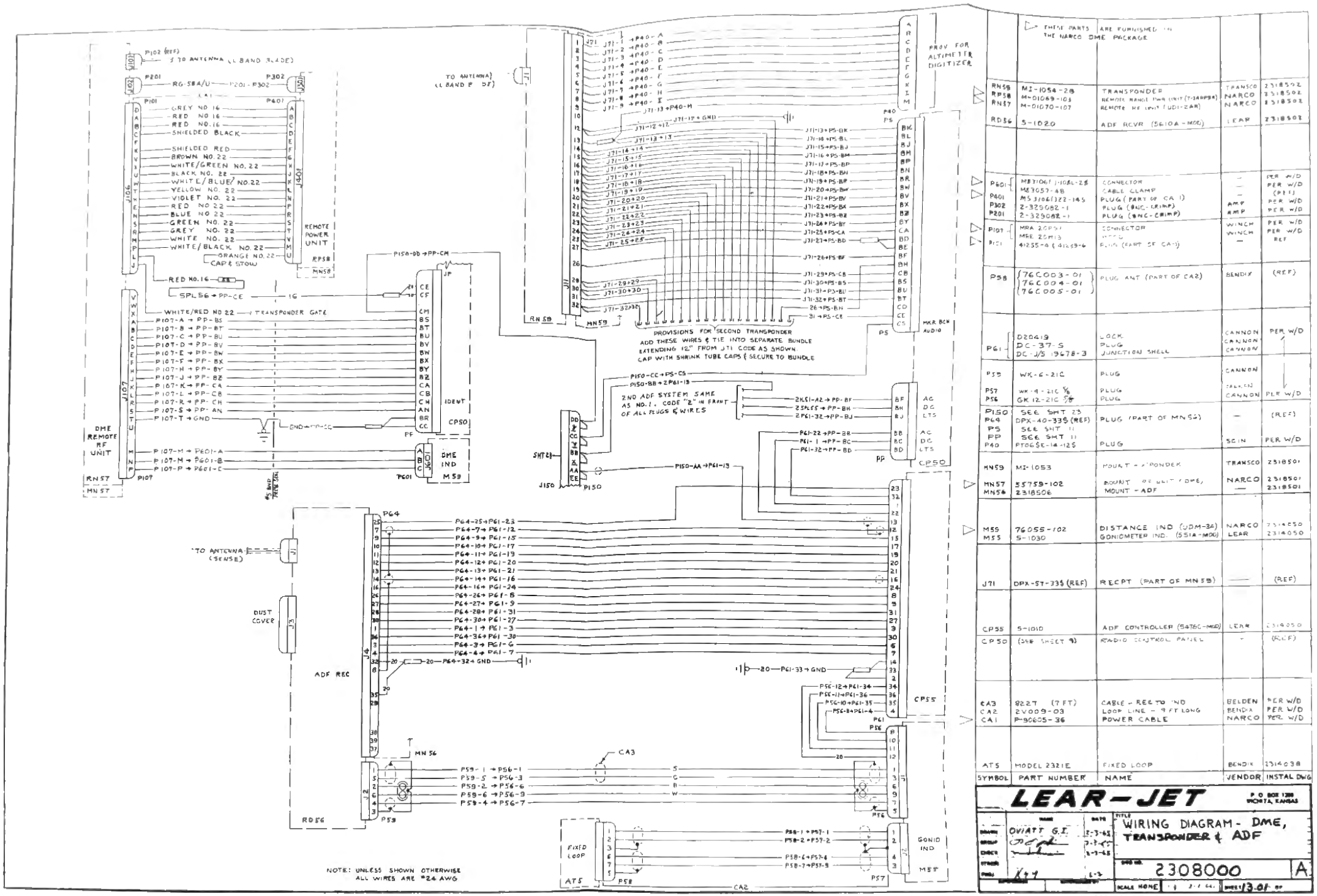

SYMBOL	PART NUMBER	NAME	VENDOR	INSTAL DWG
	▷ THESE PARTS ARE FURNISHED IN THE NARCO DME PACKAGE			
RN58 RP58 RN57	MI-1054-28 M-01069-103 M-01070-107	TRANSPONDER REMOTE RANGE TWR UNIT (T-3ARP58) REMOTE RF UNIT (UDI-2AR)	TRANSCO NARCO NARCO	2318502 2318502 2318502
RD56	S-1020	ADF RCVR (561DA-MOD)	LEAR	2318502
P601 P401 P302 P201	MS3106F10SL-2S MS3057-4B MS3106F122-14S 2-329082-1 2-329082-1	CONNECTOR CABLE CLAMP PLUG (PART OF CA 1) PLUG (BNC-CRIMP) PLUG (BNC-CRIMP)	— — AMP AMP	PER W/D PER W/D (REF) PER W/D PER W/D
P107 P101	MRA 20P57 MRE 20M13 41255-4 & 41259-6	CONNECTOR HOOD PLUG (PART OF CA-1)	WINCH WINCH —	PER W/D PER W/D REF
P58	76C003-01 76C004-01 76C005-01	PLUG ANT (PART OF CA2)	BENDIX	(REF)
P61	D20419 DC-37-S DC-J/S 19678-3	LOCK PLUG JUNCTION SHELL	CANNON CANNON CANNON	PER W/D
P55 P57 P56	WK-6-21C WK-4-21C GK12-21C	PLUG PLUG PLUG	CANNON BELDEN CANNON	PER W/D
P150 P64 PS PP P40	SEE SHT 23 DPX-40-335 (REF) SEE SHT 11 SEE SHT 11 PTO6SE-14-12S	PLUG (PART OF MN54) PLUG	— SCIN	(REF) PER W/D
MN59	MI-1053	MOUNT - TRANSPONDER	TRANSCO	2318501
MN57 MN56	55759-102 2318506	MOUNT - RF UNIT (DME), MOUNT - ADF	NARCO —	2318501 2318501
M55 M55	76055-102 S-1030	DISTANCE IND (UDM-32) GONIOMETER IND. (551A-MOD)	NARCO LEAR	2314050 2314050
J71	DPX-ST-33S (REF)	RECPT (PART OF MN58)	——	(REF)
CP55	S-1010	ADF CONTROLLER (547BC-MOD)	LEAR	2314050
CP50	(SEE SHEET 9)	RADIO CONTROL PANEL	—	(REF)
CA3 CA2 CA1	822T (7 FT) 2V009-03 P-90605-36	CABLE - REC TO IND LOOP LINE - 9 FT LONG POWER CABLE	BELDEN BENDIX NARCO	PER W/D PER W/D PER W/D
ATS	MODEL 2321E	FIXED LOOP	BENDIX	2314038

LEAR-JET P O BOX 1289 WICHITA, KANSAS

	NAME	DATE
DRAWN	OVIATT G.E.	12-3-62
DESIGN		2-3-63
CHECK		3-3-63
STRESS		
FINAL		

TITLE: WIRING DIAGRAM - DME, TRANSPONDER & ADF

DWG NO. 2308000 A

SCALE NONE | SHEET 13 OF

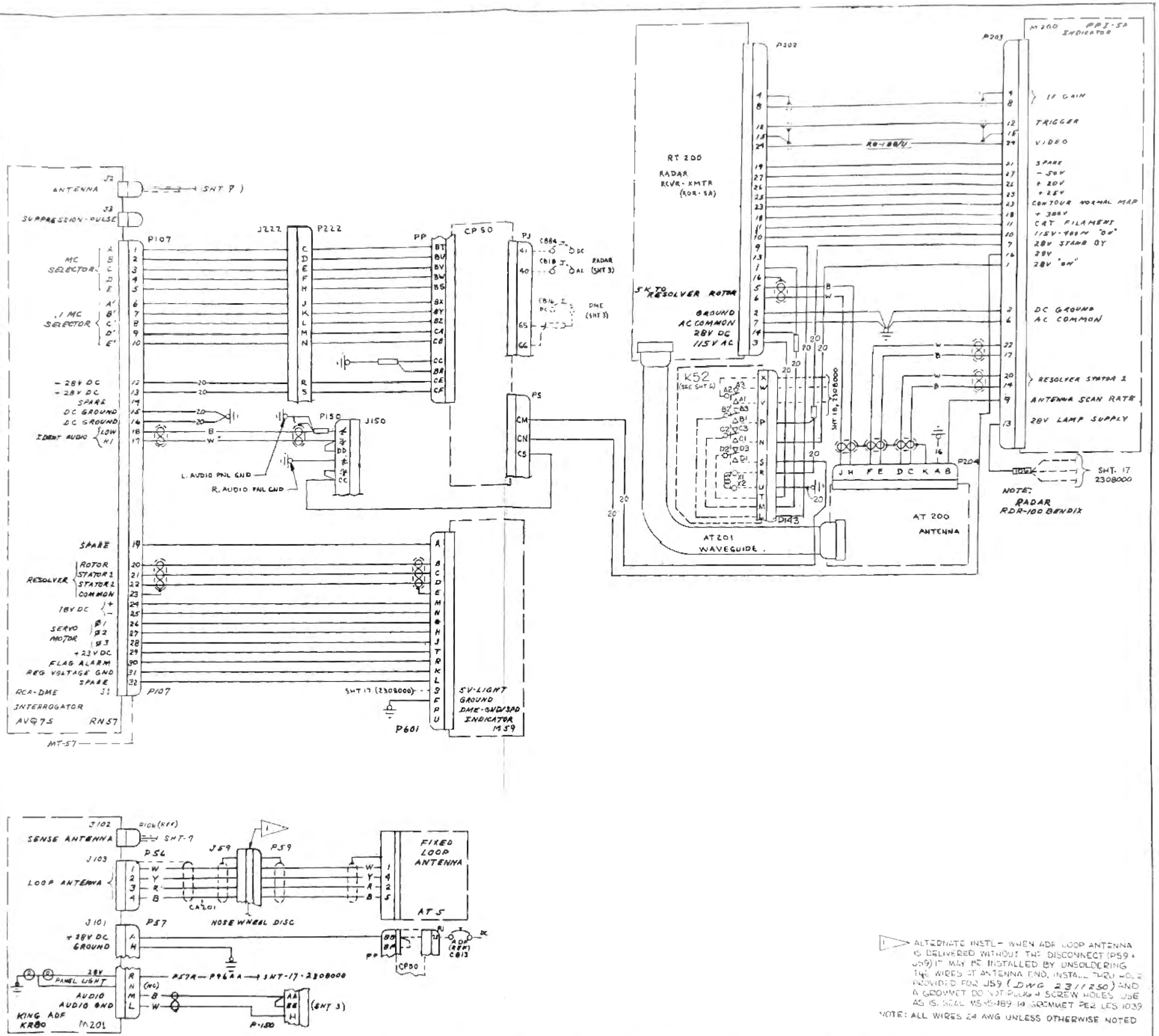

SYMBOL	PART NUMBER	NAME	[illegible]	INST DWG
P222	201359-1 42981-1 (x) 201358-2 (2) 201229-1	HOUSING SOCKETS JACKSCREWS CLAMP	AMP	PER W/D
J222	200512-2 42380-1 (x) 200875-2 (x) 201229-1 201785-4	HOUSING PINS JACKSCREWS CLAMP GUARD	AMP	PER W/D
AT201 AT200 AT5	449802 AT-103A 071-306-00	WAVE GUIDE RADAR SCANNER FIXED LOOP	— BENDIX KING	2318210 2318210 2318759
CA201	155-2000-18	CABLE	KING	23 8262
K52 M59 M200 RT200 M201	5402-1 MI 591065 IWA-102A RDR-101A-28 KR80	RELAY (K52) DME-GND/SPD INDICATOR PPI RADAR INDICATOR RDR5A RADAR RCVR/XMTR ADF	— RCA BENDIX BENDIX KING	23 8201 2314091 2314091 2318210 2314091
RN57	MI 591083	DME INTERROGATOR	RCA	2318056
MN57	2318066-7	MOUNT (DME)	—	2318086
P601 P150 P107 P106 P105 P102 P101 P204 P203 P202	PT06E-14-18S(SR) SEE SHT 3 DPA-32-33S (SEE SHT 14) (SEE SHT-23) SHT-7 SHT-7 MRE-25P-JPC MS3127-21C-P8 NF 27 325	PLUG PART OF MT-57 PLUG PLUG BNC CRIMP PLUG BNC CRIMP PLUG CONNECTOR	BENDIX AMP AMP WINCHESTER CANNON —	PER W/D PER W/D PER W/D PER W/D
P59 J59	PART OF CA201			
P56				
P57	MRA-14S-JTL	PLUG	WINCHESTER	PER W/D
PP PS PJ	SHT 1 SHT 1 SHT 3			
CP50	(SEE SHT 9)	CONTROL PANEL	—	—

LEAR JET P.O. BOX 1288 WICHITA, KANSAS

	NAME	DATE
DRAWN	OVIATT G.T.	1-3-65
GROUP	[illegible]	2-3-65
CHECK	[illegible]	1-7-65
STRESS		
PROJ.	K47	2-2

TITLE: WIRING DIAGRAM ADF-DME-RADAR

DWG NO. 2308011 A

SUPERSEDES | SUPERSEDED BY | SCALE [illegible] 1-15-66 | SHEET 4.01

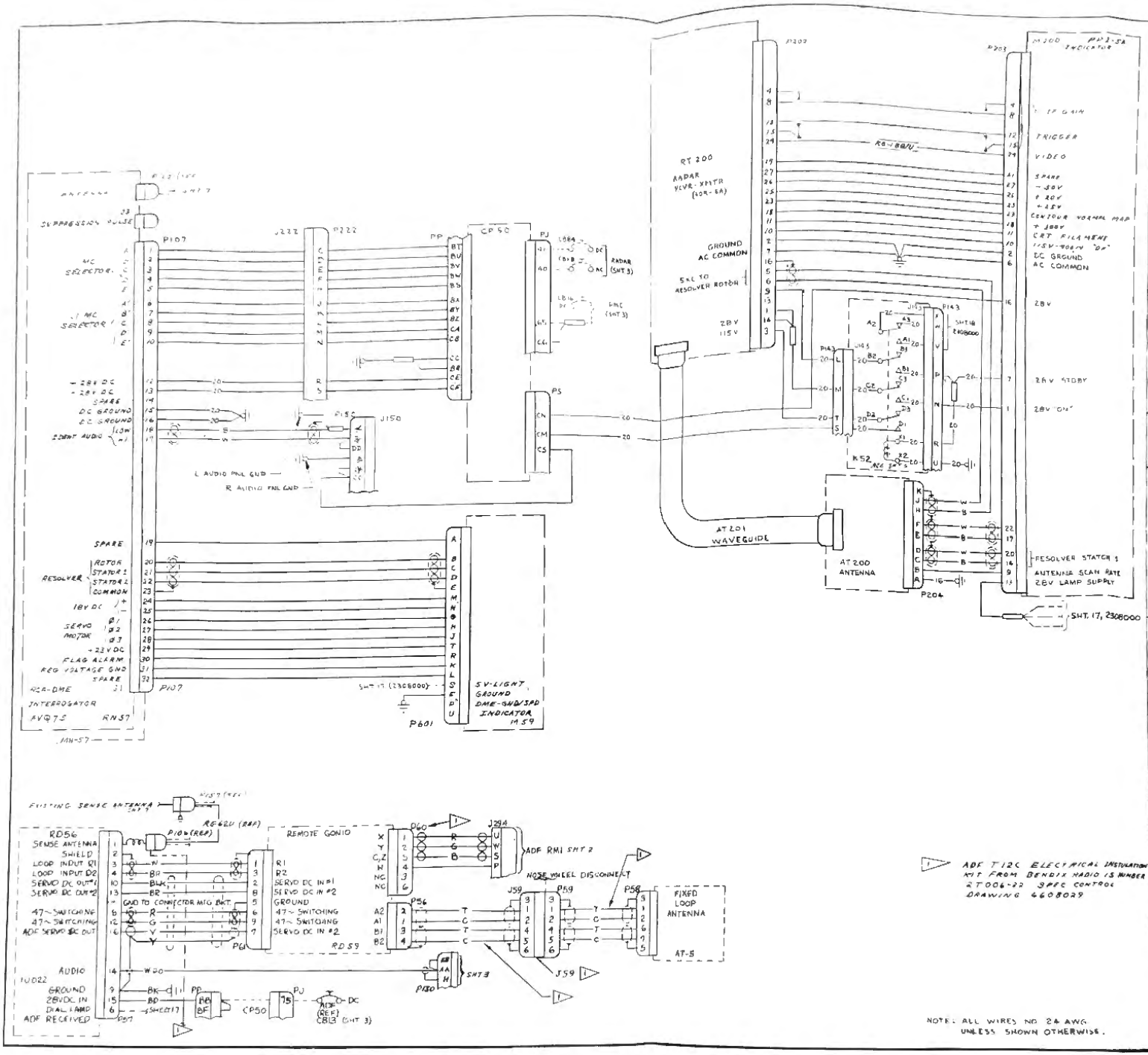

ADF T12C ELECTRICAL INSTALLATION KIT FROM BENDIX RADIO IS NUMBER 2T006-22 SPEC CONTROL DRAWING 4608029

NOTE: ALL WIRES NO 24 AWG UNLESS SHOWN OTHERWISE.

SYMBOL	PART NUMBER	NAME	VENDOR	INST DWG
AT201	4608021	WAVE GUIDE	—	2318210
AT200	AT-103 A	RADAR SCANNER	BENDIX	2318210
AT5	2321 E	FIXED LOOP	BENDIX	2314038
RD56	2512	ADF T12C RECEIVER	BENDIX	2315137
RD59	5513	REMOTE GONIO	BENDIX	2318009
K52	5402-1	RELAY (4PDT)	—	2318201
M59	MI 591085	DME-GND/SPD INDICATOR	RCA	2314091
M200	INA-102 A	PPI RADAR INDICATOR	BENDIX	2314091
RT200	RDR-101 A-28	NORSA RADAR RCVR/XMTR	BENDIX	2318210
RN57	MI 591083	DME INTERROGATOR	RCA	2318086
MN57	2318086-7	MOUNT (DME)	—	2318086
P601	PTOGE-14-185(SR)	PLUG	BENDIX	PER W/O
P150	SEE SHT 3			
P107	DPA-32-33S	PART OF MT 57		
P222	5801-1-TSOP	PLUG ASSY	—	PER W/O
J222	5801-2-FPDL	PLUG ASSY	—	PER W/O
P204	M105-LSH 19C	PLUG	WINCHESTER	PER W/O
P203	MK-27-21L-5/8	CONNECTOR	CANNON	PER W/O
P202	NK-27-32S	CONNECTOR	"	PER W/O
J143	SEE SHT 22 (2308000)			
P143				
P106	UG 111/U	CONNECTOR SENSE ANT	CANNON	
P57				
P61				
P60				
P56				
J53				
J59	TGF-WKA-5PA	NOSE WHEEL DISCONNECT	CANNON	
P59				
P58				
PP	SEE SHT 1			
PS	SEE SHT 1			
PJ	SEE SHT 3			
CP50	(SEE SHT 9)	CONTROL PANEL	—	—

LEAR JET

WIRING DIAGRAM
ADF-DME-RADAR

2308011 A

1-15-66

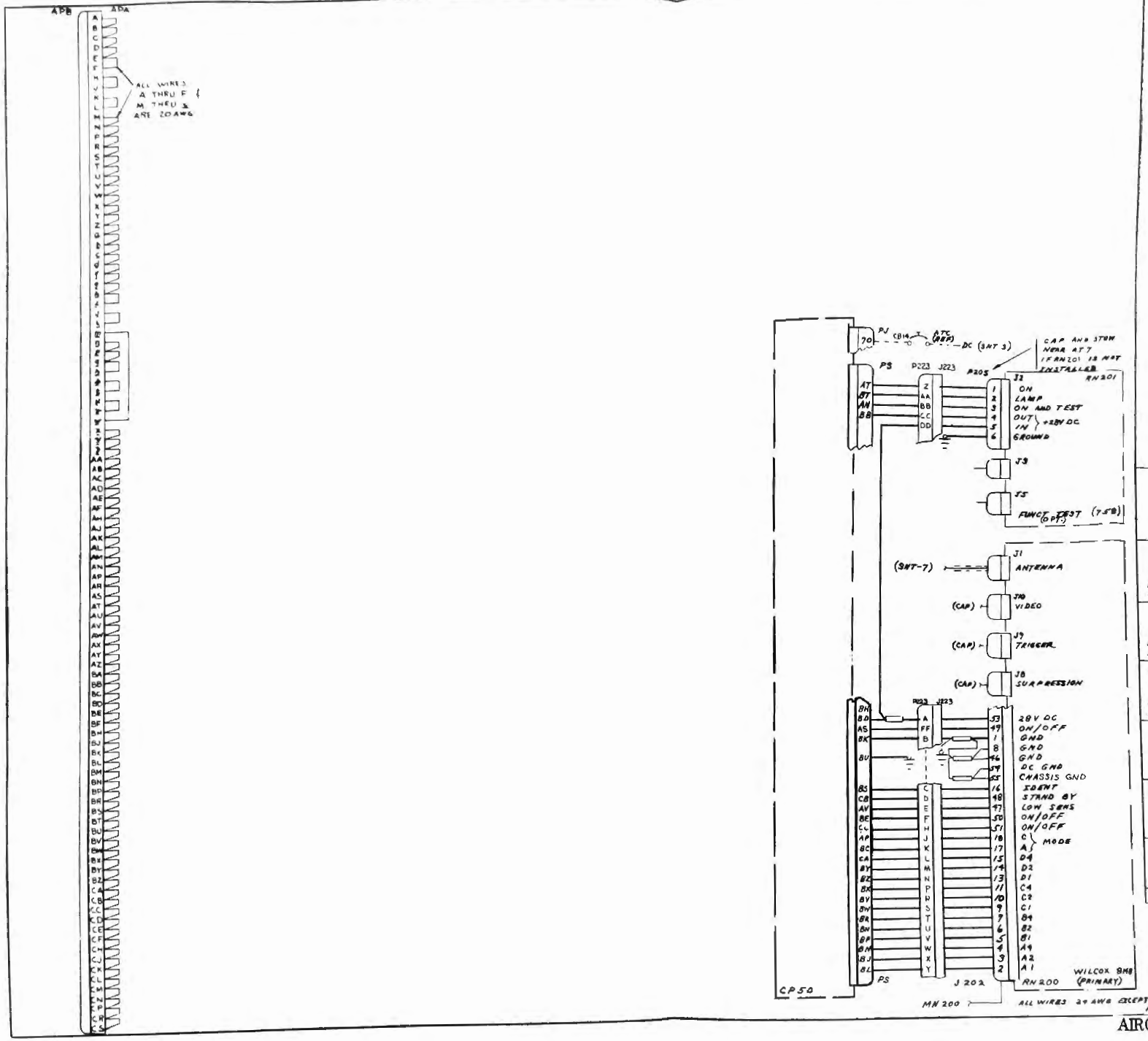

APB APA	S-805-1FSN S-805-2TPN	PART OF MN9 (SEE SHT 10)		
PJ PS	SHT-3 SHT-1			
P223 J223	S-802-18TSNL S-802-17FPCR	PLUG RECEPT	— —	PER W/D PER W/D
J202 P205	DPX-57-33B WK 6-21C-5/16	PART MN59 CONNECTOR	CANNON CANNON	— PER W/D
RN 201 RN 200	758 97573-300 (814 B)	FUNCTIONAL TESTER TRANSPONDER 814 B	WILCOX WILCOX	2318086
CP 50	(SEE SHT 9)	CONTROL PANEL	LEAR JET	
MN 200	2318086	RACK (MOUNT)	-	2318086

SYM 6

LEAR JET

P.O. BOX 1290 WICHITA KANSAS

	NAME	DATE
DRAWN	DVIATT G J	2-3-65
GROUP	[illegible]	2-3-65
CHECK	[illegible]	2-3-65
STRESS		
PROJ	R 4 7	2-2

TITLE: WIRING DIAGRAM TRANSPONDER

DWG NO 2308011 A

SUPERSEDES | SUPERSEDED BY | SCALE 1-15-66 | SHEET 5.01 OF

AIRCRAFT 23-015 THRU 23-099 10-19/10-20

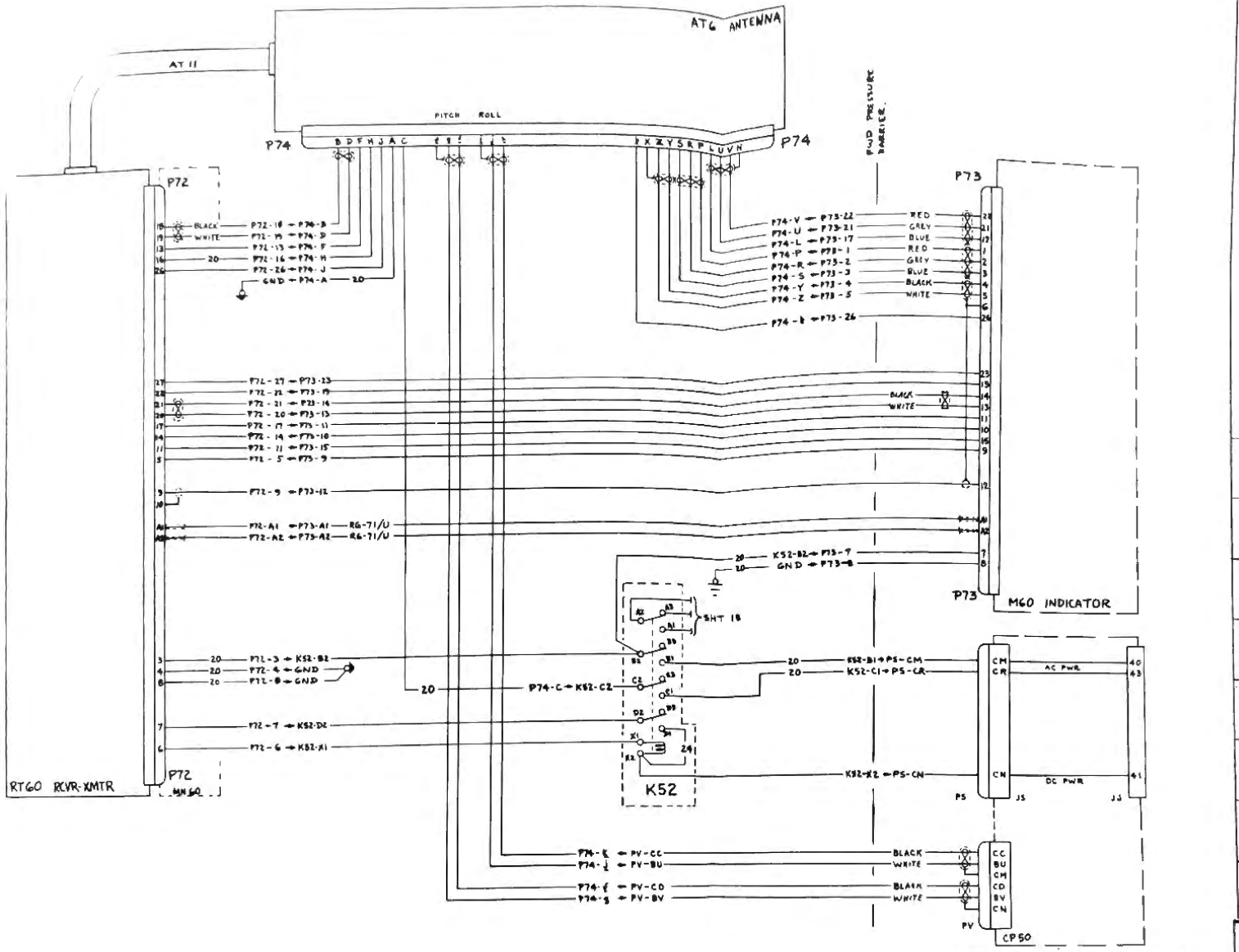

NOTE 2: PROCURE P72, P73 & P74 AS RCA MATING CONN. KIT P/N MI-891007. REWORK P73 PER 23180B0-6 PRIOR TO INSTL.

NOTE 1: ALL WIRES ON THIS SHEET ARE —24— (EXCEPT WHEN OTHER SIZE IS SPECIFIED.

SYMBOL	PART NUMBER	NAME	VENDOR	MFG PNO
P74	67-06C20-37S	PLUG	AMP	
P73	DPR-F32C2-33S	PLUG	ANNON	
P72	DPD-32C2-335-18	PLUG (PART OF MN60)	ANNON	
K52	S402-1	RELAY (4PDT)	—	
RT60	MI-891016	RCVR-XMITTER	RCA	2318501
MN60	MI-891021	MOUNT	RCA	2318502
AT11	6600038	WAVEGUIDE		2318502
M60	(MI-891020	INDICATOR	RCA	
	(MI-891022	HOOD	RCA	
AT6	(MI-891011	ANTENNA ASSY	RCA	2318502
	(MI-891024			
CP50	SEE SHT 9	CONTROL PANEL	LEAR	2318502

LEAR-JET — P O BOX 1289 WICHITA, KANSAS

	NAME	DATE
DRAWN		3-26-63
GROUP	R. OBRIEN	3-26-63
CHECK	ALBRECHT	3-26-63
STRESS		
PROJ		3-26-63

TITLE: WIRING DIAGRAM - AVQ-20 WEATHER RADAR

DWG NO 2308000 E

SCALE NONE | SHEET 16.01 OF 25

SUPERSEDES SHEET 16.00

SYMBOL	PART NUMBER	NAME	VENDOR	INSTL DWG
RT60	MI-591003	RCVR-XMTR	RCA	23F8027
M60	MI-591005 / MI-591022	INDICATOR HOOD	RCA	
AT6	MI-591000 / MI-591023	ANTENNA ASSY	RCA	
J143 / P143	SEE SHT 22 (2308000)			
P74	67-06020-375	PLUG	AMP	SEE NOTE 2
P73	DPK-F3202-335	PLUG	CANNON	
P72	DPD-3202-335-18	PLUG (PART OF MN60)	CANNON	
K52	S402-1	RELAY (4PDT)	—	23F8021
MN60	MI-591021	MOUNT	RCA	23F8027
AT11	6600038	WAVEGUIDE	MICROTECH	23F8027
M60	MI-591020 / MI-591022	INDICATOR HOOD	RCA	23F8027
AT6	MI-591011 / MI-591024	ANTENNA ASSY	RCA	
RT60	MI-591016	RCVR-XMITTER	RCA	
CP50	SEE SHT 9	CONTROL PANEL	LEAR	—

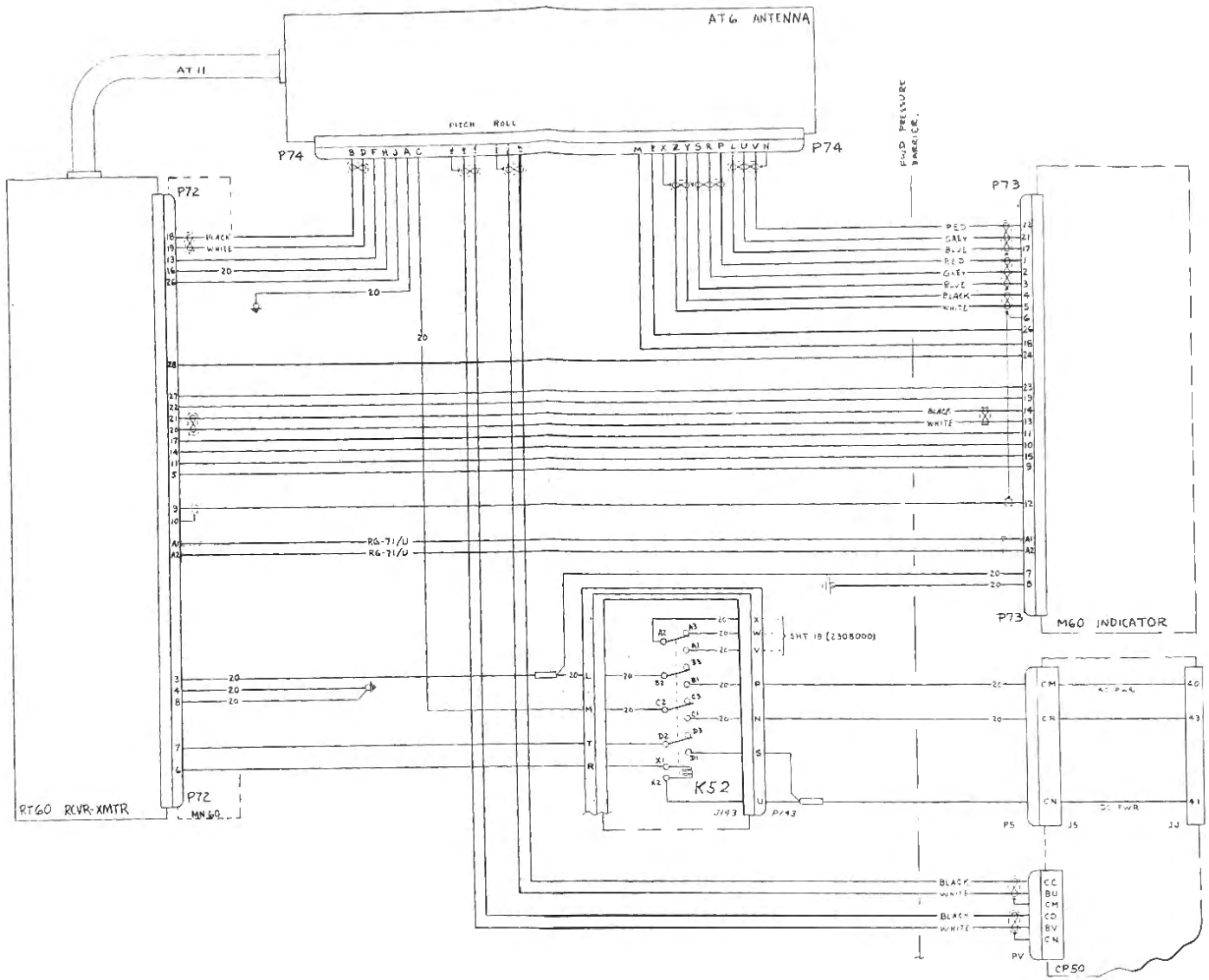

NOTE 2 PROCURE P72, P73 & P74 AS RCA MATING CONN KIT P/N MI-591007 REWORK P73 PER 2318080-4 PRIOR TO INSTL

NOTE 3: THIS DRAWING WILL ACCOMMODATE EITHER AVQ 20 OR AVQ 55 EQUIPMENT

NOTE 1 ALL WIRES ON THIS SHEET ARE —24— EXCEPT WHEN OTHER SIZE IS SPECIFIED.

LEAR-JET

P. O. BOX 1220 WICHITA, KANSAS

	NAME	DATE
DRAWN	OVIATT G.I.	2-3-65
GROUP	[illegible]	2-3-65
CHECK	[illegible]	2-3-65
STRESS		
FUNCTIONAL	K+J	2-4

TITLE: WIRING DIAGRAM - AVQ-20 WEATHER RADAR - OPTIONAL

DWG NO. 2308011 A

SCALE 1-15-66 SHEET 6-01

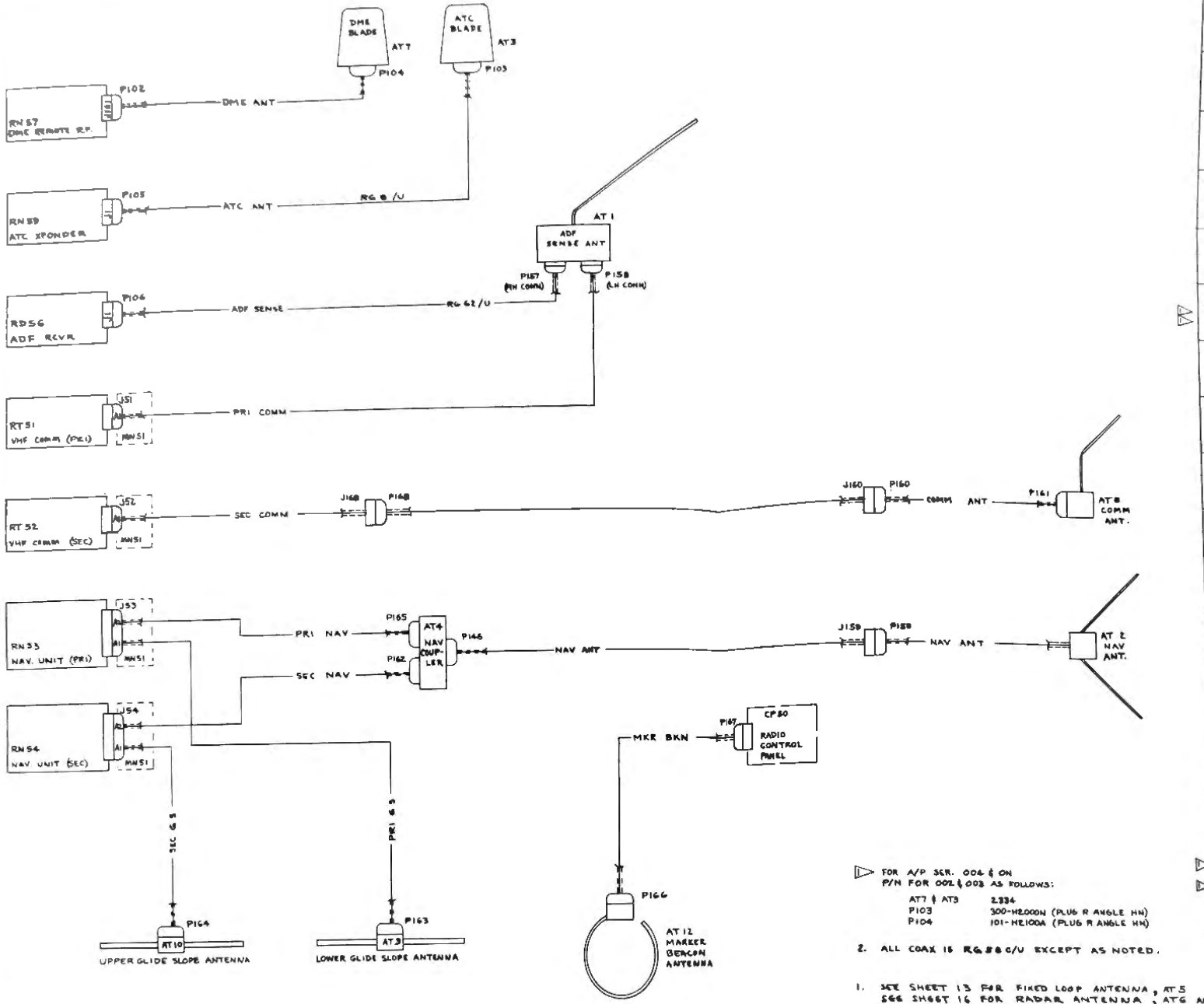

P168 P167 P166	2-329081-1	PLUG (BNC CRIMP)	AMP	PER W/D
P165 P164 P163 P162 P161				
P160 P159 P158 P157	2-329082-1	PLUG (BNC CRIMP)	AMP	PER W/D
P146	2-329082-1	PLUG BNC CRIMP	AMP	PER W/D
P106	UG 203/U	PLUG (UHF	—	PER W/D
P105	UG21D/U	PLUG - R ANGLE (N)	AUTO-M	
P104	101-N2100A	PLUG - R ANGLE (N)	AUTO-M	
P103	301-N2100A	PLUG - R ANGLE (N)	AUTO-M	
P102	2-329082-1	PLUG - (BNC CRIMP)	AMP	PER W/D
J168	2-329065-1	RECPT	AMP	PER W/D
J160	2-329065-1	RECPT	AMP	PER W/D
J159	2-328068-1	RECPT	AMP	PER W/D
MN51	(SEE SHT 10)	-	-	-
J54 J53 J52 J51	(SEE SHEET 10) —	PART OF MN51	—	—
CP50	(SEE SHT 9)	RADIO CONTROL PNL	-	-
RN59	(SEE SHT. 13)	ATC XPONDER	-	-
RN57	(SEE SHT. 13)	DME REMOTE RF	-	-
RD56	(SEE SHT. 13)	ADF RECEIVER	-	-
RN54	(SEE SHT. 12)	NAV UNIT - SEC	-	-
RN53	(SEE SHT. 12)	NAV UNIT - PRI	-	-
RT52	(SEE SHT. 11)	VHF COMM RCVR - SEC	-	-
RT51	(SEE SHT 11)	VHF COMM RCVR - PRI	-	-
AT12	12-3000	MKR BCN ANT	LEAR	23 3758
AT10	12-1001	UPPER GLIDE SLOPE ANT	LEAR	23 8752
AT9	12-1001	LOWER GLIDE SLOPE ANT	LEAR	23 8752
AT8	2380050	COMM ANT	—	2318757
AT7	2338	DME BLADE	TRANSCO	23 4037
AT4	RX10A	COUPLER - NAV	CCC	23 8302
AT3	233B	ATC BLADE	TRANSCO	2314034
AT2	2380043	NAV ANT	—	2318753
AT1	12-1002	ADF SENSE ANT	LEAR	2318753
SYMBOL	PART NUMBER	NAME	VENDOR	

▷ FOR A/P SER. 004 & ON
P/N FOR 002 & 003 AS FOLLOWS:

AT7 & AT3	2334
P103	300-HE100N (PLUG R ANGLE HN)
P104	101-HE100A (PLUG R ANGLE HN)

2. ALL COAX IS RG 58 C/U EXCEPT AS NOTED.

1. SEE SHEET 13 FOR FIXED LOOP ANTENNA, AT5
SEE SHEET 16 FOR RADAR ANTENNA, ATG AND
FOR RADAR WAVEGUIDE, AT11.

LEAR-JET P.O. BOX 1289 WICHITA, KANSAS

	NAME	DATE
DRAWN		4-6-63
GROUP	OPREM	4-8-63
CHECK	HERMAN	4-6-63
STRESS		
PROJ.		4-8-63

TITLE: WIRING DIAGRAM ANTENNAS

DWG NO. 2308000 E

SCALE NONE | SHEET 14 OF 23

P217	2-331350-1	PLUG (BNC CRIMP)	AMP	PER W/D
P218				
P219				
P168		PLUG (BNC CRIMP)	AMP	PER W/D
P167				
P166				
P165				
P164				
P163				
P162				
P161				
P160				
P159				
P158				
P157		PLUG (BNC CRIMP)	AMP	PER W/D
P106				
P146		PLUG BNC (CRIMP)	AMP	PER W/D
P104 ⚠	301-N2100A	PLUG - R ANGLE (N)	AUTO-M	
MN202	(SEE SHT 2)			
MN201	(SEE SHT 2)			
P220	UG 710 A/U	PLUG (C)	-	PER W/D
P105	UG 212/U	PLUG - R ANGLE (N)	AUTO-M	
P104 ⚠	301-N2100A	PLUG - R ANGLE (N)	AUTO-M	
P103	301-N2100A	PLUG - R ANGLE (N)	AUTO-M	
P102 ⚠	UG 709 A/U	PLUG - (C)	-	PER W/D
P102 ⚠	UG 573 A/U	PLUG (C)		
J168	2-331351-1	RECPT	AMP	PER W/D
J160		RECPT	AMP	PER W/D
J159		RECPT	AMP	PER W/D
J43	PART OF MN201		-	-
J44	PART OF MN 202		-	-
J52	(SEE SHEET 8 -	PART OF MN51	-	-
J51				
CP50	(SEE SHT 3)	RADIO CONTROL PNL	-	-
P195	2-331350-1	PLUG	AMP	
P194				
RN59	(SEE SHT. 4)	ATC XPONDER		-
RN57	(SEE SHT. 4)	DME REMOTE RF		-
J197	2-331351-1	RECEPT	AMP	-
P197	2-331350-1	PLUG	AMP	-
RN54	(SEE SHT. 2)	NAV UNIT - SEC	-	-
RN53	(SEE SHT. 2)	NAV UNIT - PRI	-	-
RT52	(SEE SHT. 1)	VHF COMM XCVR - SEC	-	-
RT51	(SEE SHT 1)	VHF COMM XCVR - PRI	-	-
RN202	(SEE SHT 11)			
RN203				
RN204				
RN205				
M201	(SEE SHT 4)	ADF UNIT		
CA200	155-2000-11	CABLE	KING	PER W/D
CA202	ZV730010-01	CABLE	MDT	
J195	2-331351-1	RECEPT	AMP	
J196				
AT 13	2380050	COMM ANT (PRI)	-	2318764
AT 12	2-3000	MKR BCN ANT	LEAR	2318758
AT 10	12-1001	UPPER GLIDE SLOPE ANT	LEAR	2318752
AT 9	12-1001	LOWER GLIDE SLOPE ANT	LEAR	2318752
AT 8	2380050	COMM ANT (SEC)	-	2318765
AT 7	2338	DME BLADE	TRANSCO	2318763
AT 4	RK10A	COUPLER - NAV	CCC	2318201
AT 3	2338	ATC BLADE	TRANSCO	2318763
AT 2	2380045	NAV ANT	-	2318755
AT 1	2318760	ADF SENSE ANT	-	2318760
SYMBOL	PART NUMBER	NAME	VENDOR	INSTL DWG

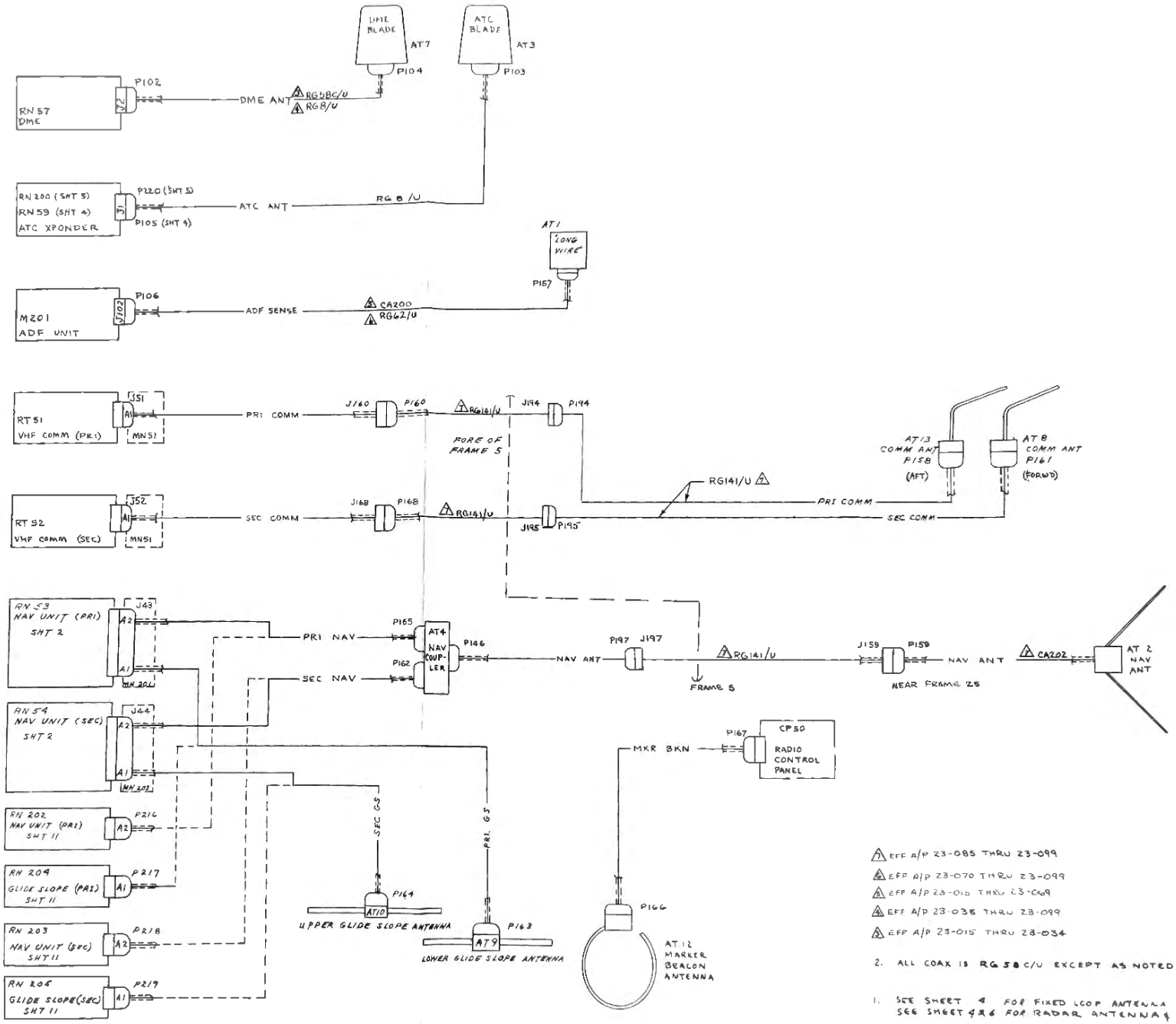

⚠1 EFF A/P 23-085 THRU 23-099

⚠2 EFF A/P 23-070 THRU 23-099

⚠3 EFF A/P 23-010 THRU 23-069

⚠4 EFF A/P 23-036 THRU 23-099

⚠5 EFF A/P 23-015 THRU 23-034

2. ALL COAX IS RG 58 C/U EXCEPT AS NOTED.

1. SEE SHEET 4 FOR FIXED LOOP ANTENNA
SEE SHEET 4 & 6 FOR RADAR ANTENNA & WAVEGUIDE

LEAR-JET

P. O. BOX 1280 WICHITA, KANSAS

	NAME	DATE
DRAWN		
GROUP		
CHECK		2-3-65
STRESS		
PROJ		

SUPERSEDES | SUPERSEDED BY

TITLE: WIRING DIAGRAM ANTENNAS

DWG NO 2308011 | A

SCALE NONE | SHEET 7.00 OF

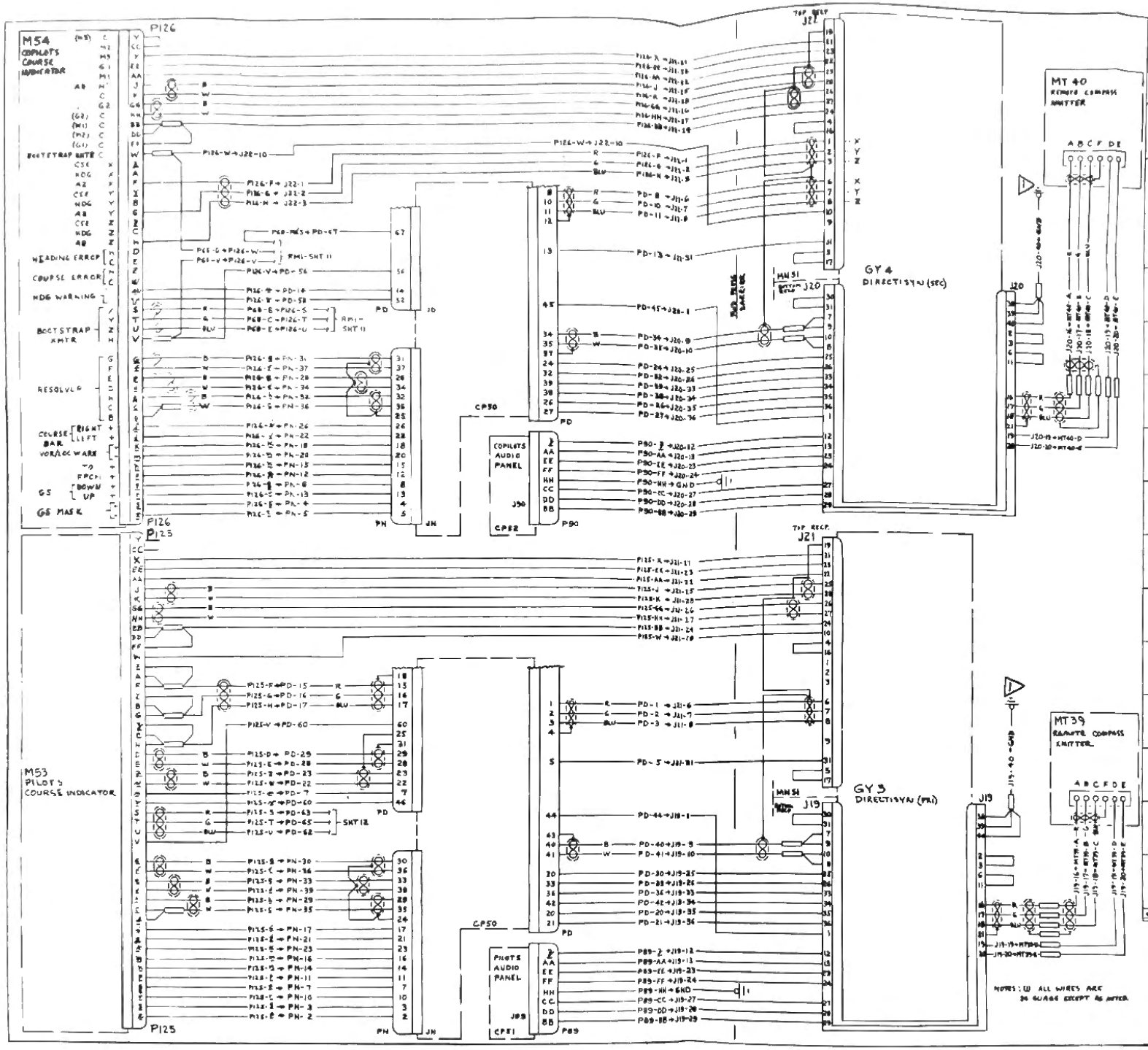

SYMBOL	PART NUMBER	NAME	VENDOR	INT. DWG.
		(1) THIS WIRE MUST BE ATTACHED TO A GRD STUD THAT DOES NOT CONTAIN ANY OTHER WIRES SHOWN ON THIS SHEET.		
JN	(PART OF CP50)		-	-
JD	(PART OF CP50)		-	-
P125	PT06SE22-55S	COURSE IND PLUG (PILOTS)	SCIN	PER W/D
P126	PT06SE22-55S	COURSE IND PLUG (COPILOTS)	SCIN	PER W/D
P90	(SEE SHEET 23)	PLUG		
P89	(SEE SHEET 23)	PLUG		
	201310-1	HOUSING		
PN	42981-1 (78 EA)	SOCKET	AMP	PER W/D
	200730-1	CLAMP		
	201388-2	JACKSCREWS (M)		
	201389-2	JACKSCREWS (F)		
	201047-4 (4 EA)	CORNER GUIDE SOCKETS		
PD	201310-1	HOUSING	AMP	PER W/D
	42981-1 (75 EA)	SOCKET		
	200730-1	CLAMP		
	201388-2	JACKSCREWS (M)		
	201389-2	JACKSCREWS (F)		
	201046-4 (4 EA)	CORNER GUIDE PINS		
J90	PART OF CP52			
J89	PART OF CP51			
J22 J20	M5052-16-1 WITH 42981-1 LP SOCKETS	PART OF MN51	AMP	-
J21 J19	M5052-16-1 WITH 42981-1 LP SOCKETS	PART OF MN51	AMP	-
MT40	5-6000 (TYPE CL)	REMOTE COMPASS XMITTER (PRI)	LEAR	2323005
MT39	5-6000 (TYPE CL)	REMOTE COMPASS XMITTER (PRI)	LEAR	2323008
GY 4	5-2000	DIRECTISYN - SEC (#2)	LEAR	2318502
GY 3	5-2000	DIRECTISYN - PRI (#1)	LEAR	2318502
MN51	2318501-30	ELECTRONIC RACK - NOSE	-	2318541
M54	522-2638-00	COPILOTS COURSE INDICATOR	COLLINS	2314050
M53	522-2638-001	PILOTS COURSE INDICATOR	COLLINS	2314050
CP52	(SEE SHEET 23)	COPILOTS AUDIO PANEL	-	-
CP51	(SEE SHEET 23)	PILOTS AUDIO PANEL	-	-
CP50	(SEE SHEET 9)	RADIO CONTROL PANEL	-	-

LEAR-JET

P. O. BOX 1300 RICHITA, KANSAS

TITLE: WIRING DIAGRAMS DIRECTISYN (PRI & SEC)

DWG NO 2308000 F

SCALE NONE | SHEET 10.01

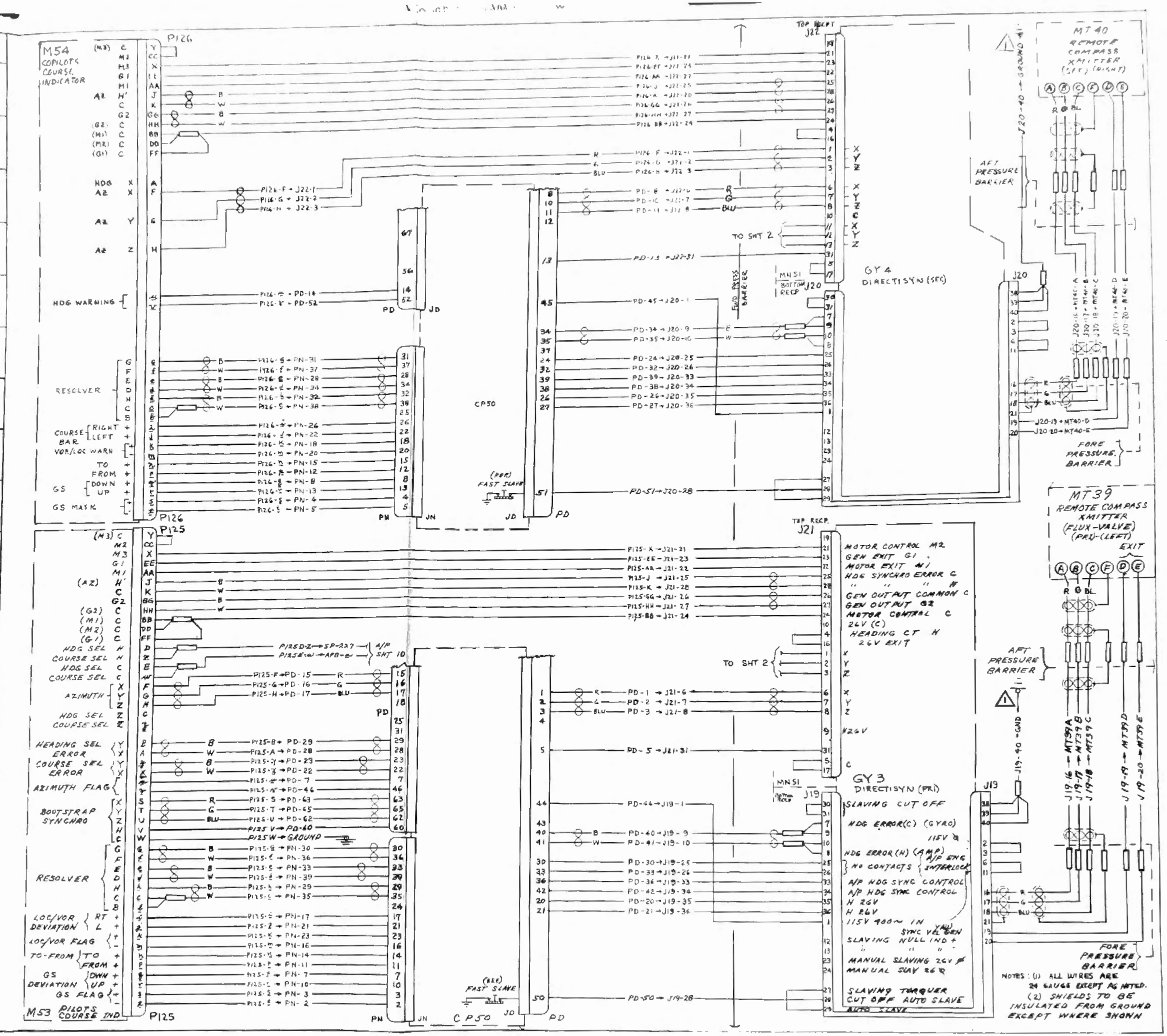

⚠ DO NOT ATTACH THIS GND TO ANY GND SHOWN ON THIS SHEET

SYMBOL	PART NUMBER	NAME	VENDOR	INST. DWG
JN	(PART OF CP50)		-	-
JD	(PART OF CP50)		-	-
P125	PT06SE 22-55S	COURSE IND. PLUG (PILOTS)	SCIN	PER W/D
P126	PT06SE 22-55S	COURSE IND PLUG (COPILOTS)	SCIN	PER W/D
PN	201310-1	HOUSING	AMP	PER W/D
	48581-1 (75 EA)	SOCKET		
	200780-1	CLAMP		
	201388-2	JACKSCREWS (M)		
	201359-2	JACKSCREWS (F)		
	201547-4 (4 EA)	CORNER GUIDE SOCKETS		
PD	201310-	HOUSING	AMP	PER W/D
	42381-1 (75 EA)	SOCKET		
	200730-1	CLAMP		
	201328-2	JACKSCREWS (M)		
	201359-2	JACKSCREWS (F)		
	201044-4 (4 EA)	CORNER GUIDE PINS		
J22 J20	MS052-16-1 WITH 42981-1 LP SOCKETS	PART OF MN51	AMP	-
J21 J19	MS052-16-1 WITH 42981-1 LP SOCKETS	PART OF MN51	AMP	-
MT40 MT39	5-6000-01 (TYPE C2) 5-6000-01 (TYPE C2)	REMOTE COMPASS XMITTER (RT) REMOTE COMPASS XMITTER (LT)	LEAR LEAR	2323046 2323046
GY 4 GY 3	5-2000 5-2000	DIRECTISYN - SEC (*2) DIRECTISYN - PRI (*1)	LEAR LEAR	2318220 2318220
MN51	2318220	ELECTRONIC RACK - NOSE	-	2318220
M54 M53	522-3088-00 522-2638-001	COPILOTS COURSE INDICATOR PILOTS COURSE INDICATOR	COLLINS COLLINS	2314091 2314091
CP50	(SEE SHEET 9)	RADIO CONTROL PANEL	-	-

LEAR-JET P. O. BOX 1280 WICHITA, KANSAS

TITLE: WIRING DIAGRAMS DIRECTISYN (PRI & SEC)

DRAWN: OVIATT GE 2-3-65 — GROUP — CHECK — STRESS — PROJ.

DWG NO 2308011 A — SCALE NONE — SHEET 8:00 OF

NOTES: (1) ALL WIRES ARE 24 GAUGE EXCEPT AS NOTED.
(2) SHIELDS TO BE INSULATED FROM GROUND EXCEPT WHERE SHOWN

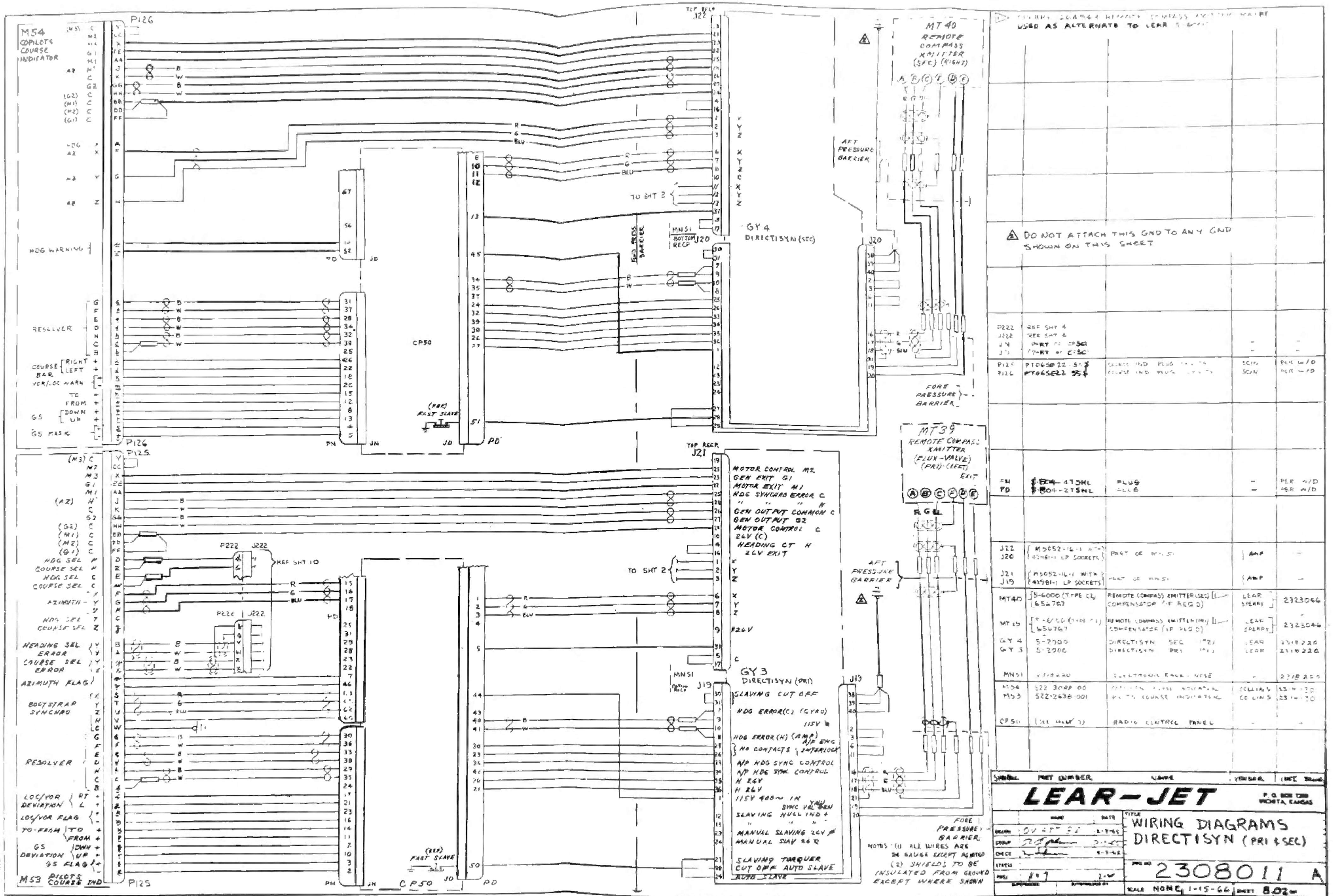
M54 COPILOTS COURSE INDICATOR
M53 PILOTS COURSE IND
P126
P125
CP50
GY 4 DIRECTISYN (SEC)
GY 3 DIRECTISYN (PRI)
MT 40 REMOTE COMPASS XMITTER (SEC) (RIGHT)
MT39 REMOTE COMPASS XMITTER (FLUX-VALVE) (PRI) (LEFT)
AFT PRESSURE BARRIER
FORE PRESSURE BARRIER
DO NOT ATTACH THIS GND TO ANY GND SHOWN ON THIS SHEET
RESOLVER
HDG WARNING
GS MASK
TO SHT 2
REF SHT 10
FAST SLAVE
MOTOR CONTROL M2
GEN EXIT G1
MOTOR EXIT M1
HDG SYNCHRO ERROR C
GEN OUTPUT COMMON C
GEN OUTPUT G2
MOTOR CONTROL C
26V (C)
HEADING CT H
26V EXIT
SLAVING CUT OFF
HDG ERROR(C) (GYRO)
HDG ERROR (H) (AMP)
A/P HDG SYNC CONTROL
SLAVING NULL IND
MANUAL SLAVING 26V
SLAVING TORQUER CUT OFF AUTO SLAVE
NOTES: (1) ALL WIRES ARE 24 GAUGE EXCEPT AS NOTED
(2) SHIELDS TO BE INSULATED FROM GROUND EXCEPT WHERE SHOWN
LEAR-JET
P.O. BOX 1280 WICHITA, KANSAS
WIRING DIAGRAMS DIRECTISYN (PRI & SEC)
2308011 A
SCALE NONE 1-15-66

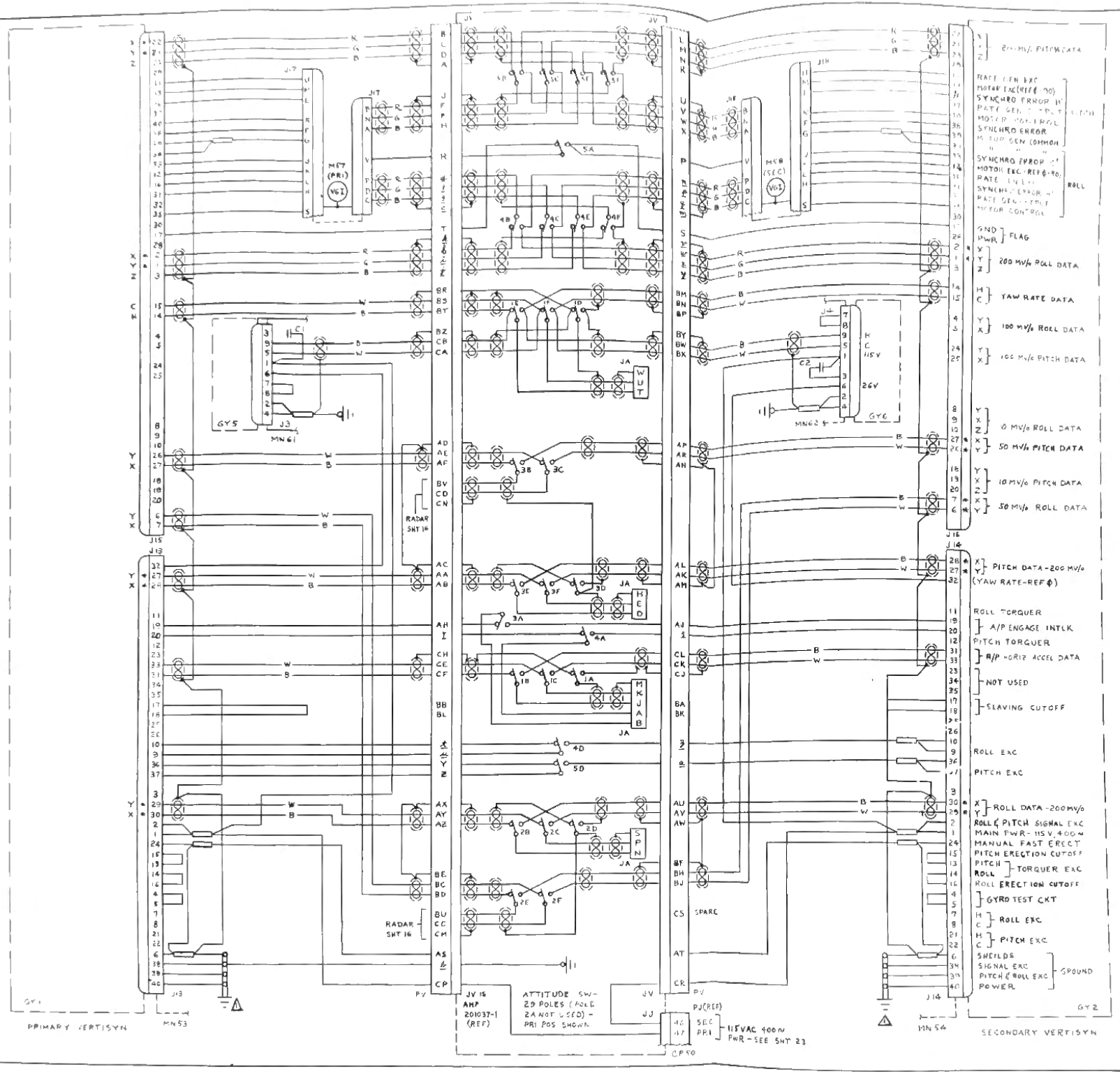

⚠ DO NOT ATTACH THIS GROUND TO ANY GROUND SHOWN ON THIS SHEET.

SYMBOL	PART NUMBER	NAME	VENDOR	INST DWG
C2	PART OF MN62	CAPACITOR - 10 MFD 400V		
C1	(PART OF MN61)	CAPACITOR - 10 MFD, 400V		
M58	5-4000	VGI	LEAR	2314050
M57	5-4000	VGI	LEAR	2314050
PJ	(SEE SHEET 23)		—	—
	201345-1	HOUSING		
	42981-1 (04 EA)	SOCKETS		
PV	201221-1	CLAMP	AMP	PER W/D
	201388-2	JACKSCREWS (M)		
	201389-2	JACKSCREWS (F)		
	201047-4 (2 EA)	CORNER GUIDE SOCKETS		
	201046-4 (2 EA)	CORNER GUIDE PINS		
MN62	13-1011	MOUNT-SEC RATE GYRO	LEAR	2318501
MN61	13-1011	MOUNT-PRI RATE GYRO	LEAR	2318501
MN54	2318504-1	MOUNT-SEC VERTISYN	—	2318501
MN53	2318504-1	MOUNT-PRI VERTISYN	—	2318501
JV	(PART OF CP50)			
JJ	(PART OF CP50)			
JA	(PART OF CP50)	RECPT - AUTOPILOT		(REF)
J4	(PART OF MN62)	RECPT		
J3	(PART OF MN61)	RECPT		
J18	MS3101A22-14S	RECPT		
	MS3057-12B	ADAPTER		
	AN3420-12A	SLEEVE	—	PER W/D
	AN3420-8A	SLEEVE		
J17	MS3101A22-14S	RECPT		
	MS3057-12B	ADAPTER	—	PER W/D
	AN3420-12A	SLEEVE		
	AN3420-8A	SLEEVE		
J16	TOP MS052-16-1	PART OF MN54	AMP	REF (REF)
J14	BOTTOM WITH 42981-1			
J15	TOP MS052-16-1	PART OF MN53	AMP	REF (REF)
J13	BOTTOM WITH 42981-1			
GY6	4-8008	RATE GYRO - SECOND	LEAR	2318502
GY5	4-8008	RATE GYRO - PRIMARY	LEAR	2318502
GY2	5-2030	VERTISYN - SECOND	LEAR	2318502
GY1	5-2030	VERTISYN - PRIMARY	LEAR	2318502
CP50	10-1010	RADIO CONTROL PANEL	LEAR	2314050

LEAR-JET

P.O. BOX 1280 WICHITA, KANSAS

	NAME	DATE
DRAWN	OPHEIM	2-7-63
GROUP	OPHEIM	7-1-63
CHECK	[illegible]	7-11-63
STRESS		
PROJ	[illegible]	12-1-63

TITLE: WIRING DIAGRAM - VERTISYN - PRI & SEC

DWG NO 2308000 F

SCALE NONE | 4-15-65 | SHEET 9.01 OF

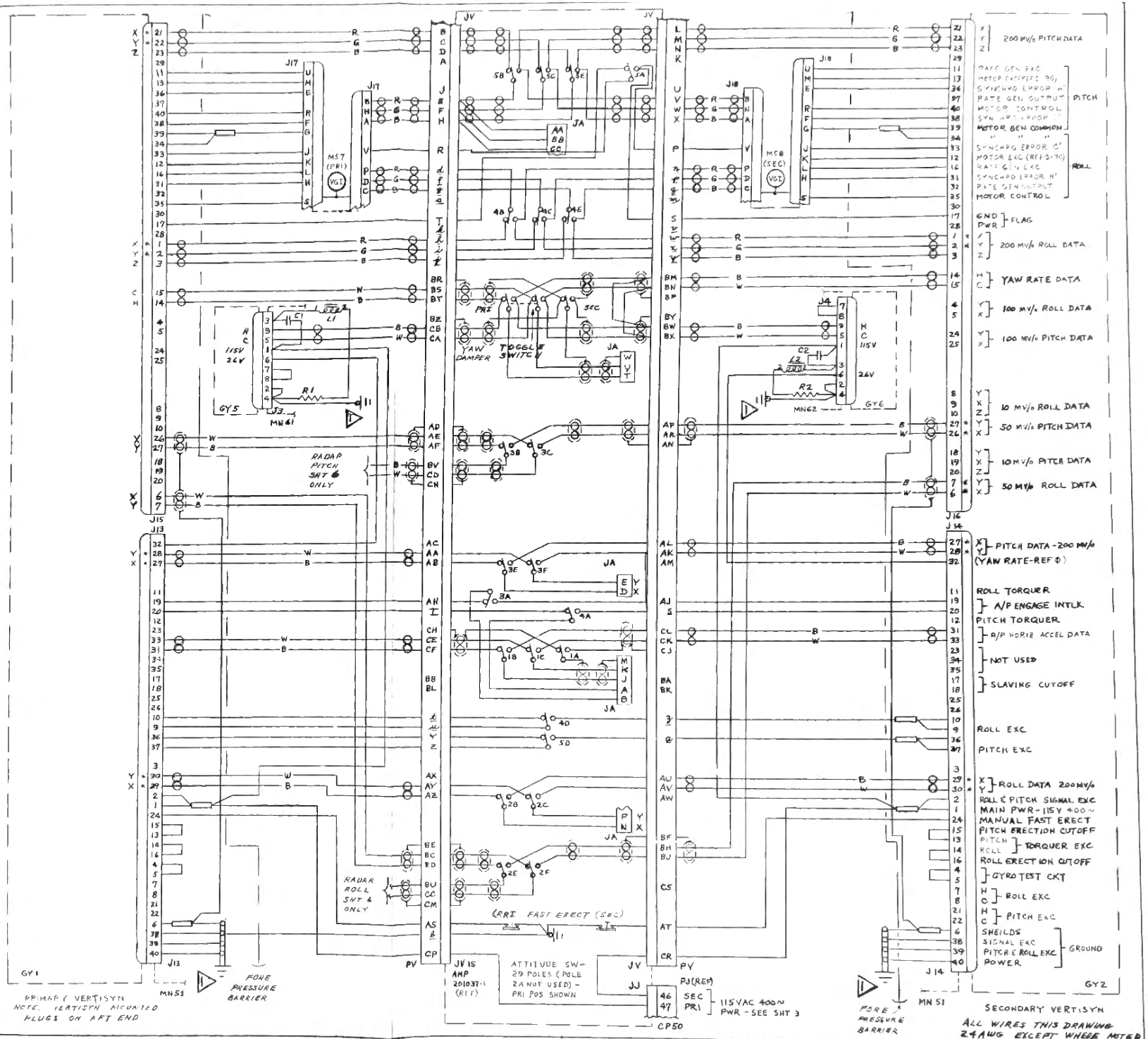

SYMBOL	PART NUMBER	NAME	VENDOR	INST DWG
R1 R2 L1 L2	PART OF MN61 " " " 62 (PART OF MN61 " " " 62	RESISTOR - 200Ω 10W INDUCTOR - 82457 " "		
C2 C1	(PART OF MN62) (PART OF MN61)	CAPACITOR .22 µf/200VDC CAPACITOR .22 µf/200V.DC		
MSB MS7 PJ	5-4000-01 5-4000-01 (SEE SHEET 3)	VGI VGI	LEAR LEAR —	2314130 2314130 —
PV	S-805-30TSNL	PLUG	—	REF W/D
MN62 MN61 MN51	13-1011-02 13-1011-02 SEE SHEET 8	MOUNT-SEC RATE GYRO MOUNT-PRI RATE GYRO	LEAR LEAR	2318 222 2318 222
JV JJ	(PART OF CP50) (PART OF CP50)			
JA	(PART OF CP50)	RECPT-AUTOPILOT		(REF)
J6	(PART OF MN62)	RECPT		
J3	(PART OF MN61)	RECPT		
J18	MS3101A22-14S	RECPT		
	MS3057-12B	ADAPTER		
	AN3420-12A	SLEEVE	—	PER W/D
	AN3420-8A	SLEEVE		
J17	MS3101A22-14S	RECPT		
	MS3057-12B	ADAPTER	—	PER W/D
	AN3420-12A	SLEEVE		
	AN3420-5A	SLEEVE		
J16	TOP MS052-16-1	PART OF MN56	AMP	(REF)
J14	BOTTOM WITH 42981-1			(REF)
J15	TOP MS052-16-1	PART OF MN53	AMP	(REF)
J13	BOTTOM WITH 42981-1			(REF)
GY6	4-8008	RATE GYRO - SECOND (YAW)	LEAR	2318 222
GY5	4-8008	RATE GYRO - PRIMARY (YAW)	LEAR	2318 222
GY2	5-2030	VERTISYN - SECOND	LEAR	2318220
GY1	5-2030	VERTISYN - PRIMARY	LEAR	2318 220
CP50	10-1010-05	RADIO CONTROL PANEL	LEAR	2314130

	NAME	DATE
DRAWN		
GROUP		
CHECK		
STRESS		
PROJ		

10-30 AIRCRAFT 23-015 THRU 23-099

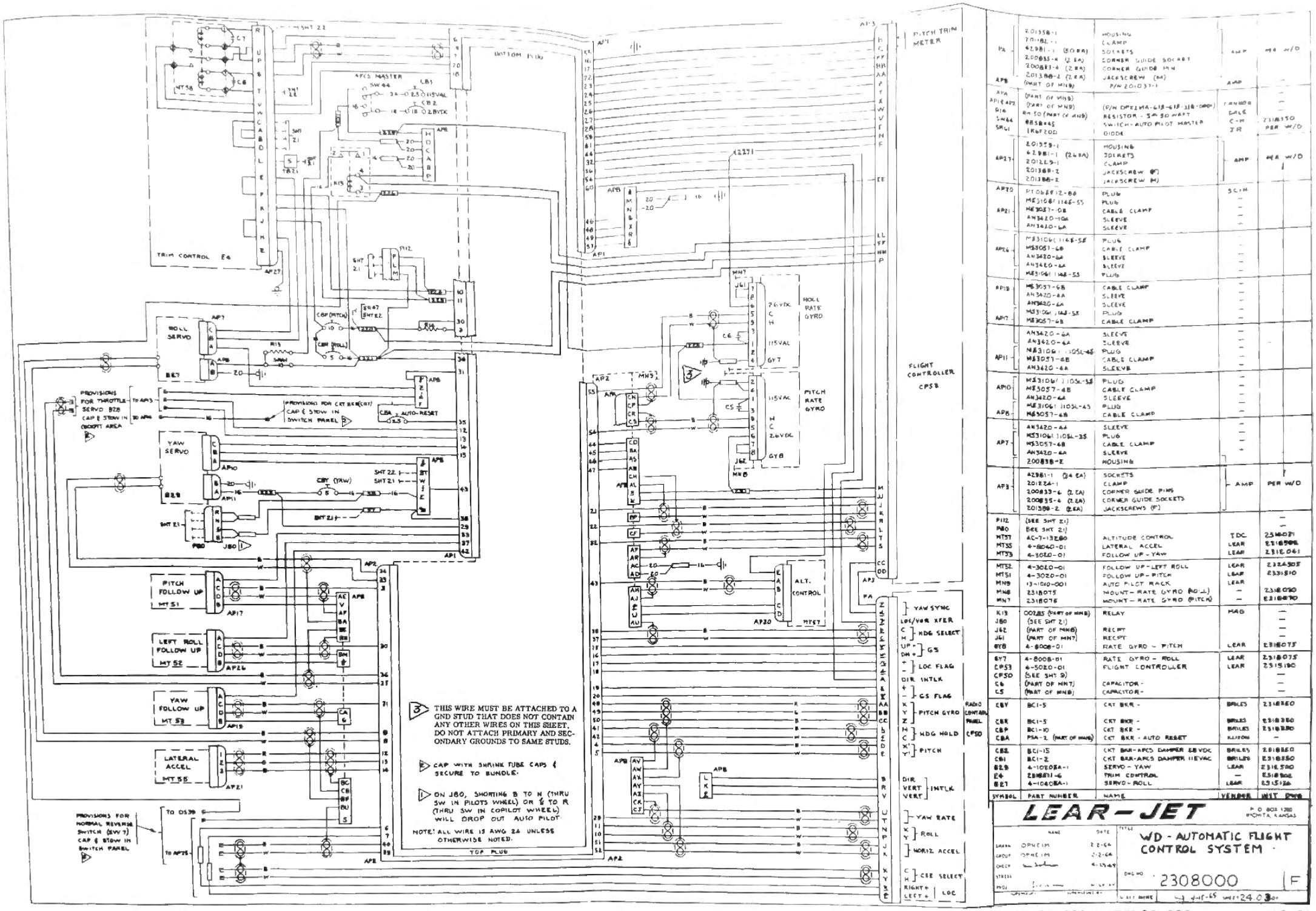

SYMBOL	PART NUMBER	NAME	VENDOR	UNIT QTY
PA	201358-1	HOUSING		
	201181-1	CLAMP		
	42981-1 (50EA)	SOCKETS	AMP	MIL W/D
	200833-6 (2EA)	CORNER GUIDE SOCKET		
	200833-6 (2EA)	CORNER GUIDE PIN		
	201388-2 (2EA)	JACKSCREW (M)		
APB	(PART OF MN8)	P/N 201033-1	AMP	—
APA	(PART OF MN8)			—
API&AP2	(PART OF MN8)	(P/N DPE1MA-618-618-318-DRP)	TANNER	—
D16	RM 50 (PART OF MN8)	RESISTOR - 5Ω 50 WATT	DALE	C-M
SW44	8858445	SWITCH-AUTO PILOT MASTER	C-H	2318350
SR61	IR6F20D	DIODE	IR	PER W/D
AP27	201379-1	HOUSING		
	42981-1 (24EA)	SOCKETS	AMP	MIL W/D
	201229-1	CLAMP		
	201368-2	JACKSCREW (F)		
	201388-2	JACKSCREW (M)		
AP25	PT06E12-8S	PLUG	SCIN	
AP21	MS3106E 14S-5S	PLUG	—	
	MS3057-08	CABLE CLAMP	—	
	AN3420-10A	SLEEVE	—	
	AN3420-6A	SLEEVE	—	
AP26	MS3106E 14S-5S	PLUG	—	
	MS3057-6B	CABLE CLAMP	—	
	AN3420-6A	SLEEVE	—	
	AN3420-6A	SLEEVE	—	
	MS3106E 14S-5S	PLUG	—	
AP18	MS3057-6B	CABLE CLAMP	—	
	AN3420-8A	SLEEVE	—	
	AN3420-6A	SLEEVE	—	
AP17	MS3106E 14S-5S	PLUG	—	
	MS3057-6B	CABLE CLAMP	—	
	AN3420-6A	SLEEVE	—	
AP11	AN3420-6A	SLEEVE	—	
	AN3420-6A	SLEEVE	—	
	MS3106E 10SL-4S	PLUG	—	
	MS3057-6B	CABLE CLAMP	—	
	AN3420-6A	SLEEVE	—	
AP10	MS3106E 10SL-3S	PLUG	—	
	MS3057-4B	CABLE CLAMP	—	
	AN3420-6A	SLEEVE	—	
AP8	MS3106E 10SL-4S	PLUG	—	
	MS3057-6B	CABLE CLAMP	—	
AP7	AN3420-6A	SLEEVE	—	
	MS3106E 10SL-3S	PLUG	—	
	MS3057-4B	CABLE CLAMP	—	
	AN3420-6A	SLEEVE	—	
	200838-2	HOUSING	—	
AP3	42981-1 (34 EA)	SOCKETS	AMP	PER W/D
	201224-1	CLAMP		
	200833-6 (2 EA)	CORNER GUIDE PINS		
	200835-6 (2 EA)	CORNER GUIDE SOCKETS		
	201388-2 (2 EA)	JACKSCREWS (F)		
P112	(SEE SHT 21)			—
P80	SEE SHT 21)			—
MT57	AC-7-13280	ALTITUDE CONTROL	TDC	2346021
MT55	4-8040-01	LATERAL ACCEL	LEAR	2316598
MT53	4-3020-01	FOLLOW UP - YAW	LEAR	2316041
MT52	4-3020-01	FOLLOW UP - LEFT ROLL	LEAR	2324305
MT51	4-3020-01	FOLLOW UP - PITCH	LEAR	2331810
MN8	13-010-001	AUTO PILOT RACK	LEAR	—
MN6	2318075	MOUNT - RATE GYRO (ROLL)	—	2318090
MN7	2318076	MOUNT - RATE GYRO (PITCH)	—	2318090
K13	002285 (PART OF MN8)	RELAY	MAG	—
J80	(SEE SHT 21)			—
J62	(PART OF MN6)	RECPT		—
J61	(PART OF MN7)	RECPT		—
GYB	4-8008-01	RATE GYRO - PITCH	LEAR	2318075
GY7	4-8008-01	RATE GYRO - ROLL	LEAR	2318075
CPS3	4-5020-01	FLIGHT CONTROLLER	LEAR	2315190
CPS0	(SEE SHT 31)			—
C6	(PART OF MN7)	CAPACITOR -		—
C5	(PART OF MN8)	CAPACITOR -		—
CBY	BCI-5	CKT BKR -	BRILES	2318260
CBR	BCI-5	CKT BKR -	BRILES	2318280
CBP	BCI-10	CKT BKR -	BRILES	2318280
CBA	PSA-2 (PART OF MN8)	CKT BKR - AUTO RESET	KLIXON	—
CB5	BCI-15	CKT BKR-APCS DAMPER 28VDC	BRILES	2318260
CB1	BCI-2	CKT BKR-APCS DAMPER 115VAC	BRILES	2318250
B29	4-10E08A-1	SERVO - YAW	LEAR	2316390
E4	2B98711-6	TRIM CONTROL	—	2318906
B27	4-10408A-1	SERVO - ROLL	LEAR	2315126

	NAME	DATE
DRAWN	OPNEUM	2-2-64
GROUP	OPNEUM	2-2-64
CHECK		4-15-64
STRESS		
PROJ		

LEAR-JET — P.O. BOX 1380 WICHITA, KANSAS

TITLE: WD - AUTOMATIC FLIGHT CONTROL SYSTEM

DWG NO 2308000 F

LAST CHANGE 4-15-65 WHEN 24.03

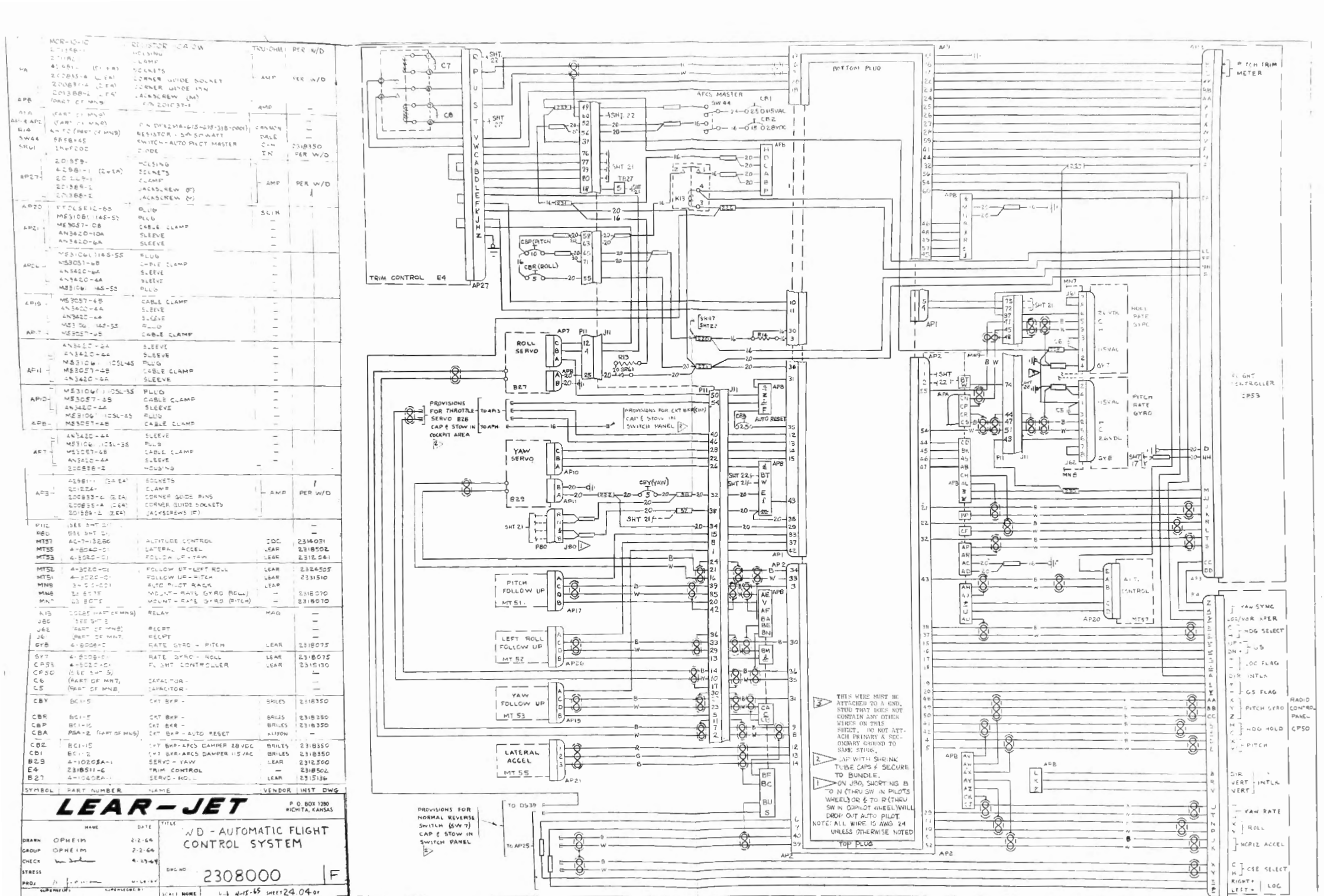

	MCR-10-10	RESISTOR (10 W)	TRU-OHM	PER W/D
	L7156-1	HOUSING		
	Z7114	CLAMP		
PA	6-1681- (5 EA)	SOCKETS		
	200885-6 (2 EA)	CORNER GUIDE SOCKET	AMP	PER W/D
	200877-4 (2 EA)	CORNER GUIDE PIN		
	201388-2 (2 EA)	JACKSCREW (M)		
APB	(PART OF MNB)	P/N 2310237-1	AMP	—
AIA	(PART OF MNA)	P/N DP82M6-615-678-318-0001	CANNON	—
AMP APC	(PART OF MNA)	RESISTOR - 5W 50 WATT	DALE	—
B14	4W FC (PART OF MNB)	SWITCH-AUTO PILOT MASTER	C-H	2318350
SW44	RR68×45	DIODE	IN	PER W/D
SRG1	1N4720C			
	20959-	HOUSING		
	42981-1 (2 EA)	SOCKETS		
AP27	20 269-1	CLAMP	AMP	PER W/D
	201388-2	JACKSCREW (F)		
	201388-2	JACKSCREW (M)		
AP20	MS3106E12-6S	PLUG	SCIN	—
	MS3108E 14S-5S	PLUG	—	—
AP21	MS3057-08	CABLE CLAMP	—	—
	AN3420-10A	SLEEVE	—	—
	AN3420-6A	SLEEVE	—	—
	MS3106E 14S-5S	PLUG	—	—
AP26	MS3057-6B	CABLE CLAMP	—	—
	AN3420-8A	SLEEVE	—	—
	AN3420-4A	SLEEVE	—	—
	MS3106E 14S-5S	PLUG	—	—
AP19	MS3057-6S	CABLE CLAMP	—	—
	AN3420-4A	SLEEVE	—	—
	AN3420-4A	SLEEVE	—	—
	MS3106E 14S-5S	PLUG	—	—
AP7	MS3057-4S	CABLE CLAMP	—	—
	AN3420-4A	SLEEVE	—	—
	AN3420-4A	SLEEVE	—	—
	MS3106E 10SL-4S	PLUG	—	—
AP11	MS3057-4B	CABLE CLAMP	—	—
	AN3420-4A	SLEEVE	—	—
	MS3106E 10SL-3S	PLUG	—	—
AP10	MS3057-4S	CABLE CLAMP	—	—
	AN3420-4A	SLEEVE	—	—
AP8	MS3106E 10SL-4S	PLUG	—	—
	MS3057-4B	CABLE CLAMP	—	—
	AN3420-4A	SLEEVE	—	—
	MS3106E 10SL-3S	PLUG	—	—
AP1	MS3057-4B	CABLE CLAMP	—	—
	AN3420-4A	SLEEVE	—	—
	200838-2	HOUSING		
	42981-1 (22 EA)	SOCKETS		1
	201224-	CLAMP	AMP	PER W/D
AP3	200833-6 (2 EA)	CORNER GUIDE PINS		
	200835-4 (2 EA)	CORNER GUIDE SOCKETS		
	201588-2 (2 EA)	JACKSCREWS (F)		
P11	(SEE SHT 21)			—
P80	(SEE SHT 21)			—
MT51	46-01-13280	ALTITUDE CONTROL	CDC	2314031
MT55	4-8040-01	LATERAL ACCEL	LEAR	2318502
MT53	4-8020-01	FOLLOW UP-YAW	LEAR	2312.041
MT52	4-8020-01	FOLLOW UP-ROLL	LEAR	2326505
MT51	4-8020-01	FOLLOW UP-PITCH	LEAR	2331510
MNB	34 C 10021	AUTO PILOT RACK	—	—
MNB	34 6678	MOUNT-RATE GYRO ROLL	—	2318070
MNA	46 8078	MOUNT-RATE GYRO (PITCH)	—	2318070
A13	(SEE PART OF MNB)	RELAY	MAG	—
J80	(SEE SHT 3)			—
J62	(PART OF MNB)	RECPT		—
J6	(PART OF MNA)	RECPT		—
GYB	4-8008-01	RATE GYRO - PITCH	LEAR	2318075
GY7	4-8008-01	RATE GYRO - ROLL	LEAR	2318075
CP53	4-8020-01	FL SHT CONTROLLER	LEAR	2315130
CP50	(SEE SHT 3)			—
C6	(PART OF MNA)	CAPACITOR -		—
C5	(PART OF MNB)	CAPACITOR -		—
CBY	BC1-5	CKT BKR -	BRLES	2318350
CBR	BC1-5	CKT BKR -	BRLES	2318350
CBP	BC1-16	CKT BKR -	BRLES	2318350
CBA	PSA-2 (PART OF MNB)	CKT BKR - AUTO RESET	ALTON	—
CBZ	BC1-15	CKT BKR-AFCS DAMPER 28 VDC	BRLES	2318350
CB1	BC1-2	CKT BKR-AFCS DAMPER 115 VAC	BRLES	2318350
B29	4-1020SA-1	SERVO - YAW	LEAR	2312500
E4	2318511-6	TRIM CONTROL	—	2318502
B27	4-1040SA-1	SERVO - ROLL	LEAR	2315136

SYMBOL	PART NUMBER	NAME	VENDOR	INST DWG

LEAR-JET P. O. BOX 1280 WICHITA, KANSAS

	NAME	DATE
DRAWN	OPHEIM	2-2-64
GROUP	OPHEIM	2-2-64
CHECK		4-15-64
STRESS		
PROJ		

TITLE: W/D - AUTOMATIC FLIGHT CONTROL SYSTEM

DRG NO 2308000 F

SCALE NONE 4-15-65 SHEET 24.04 01

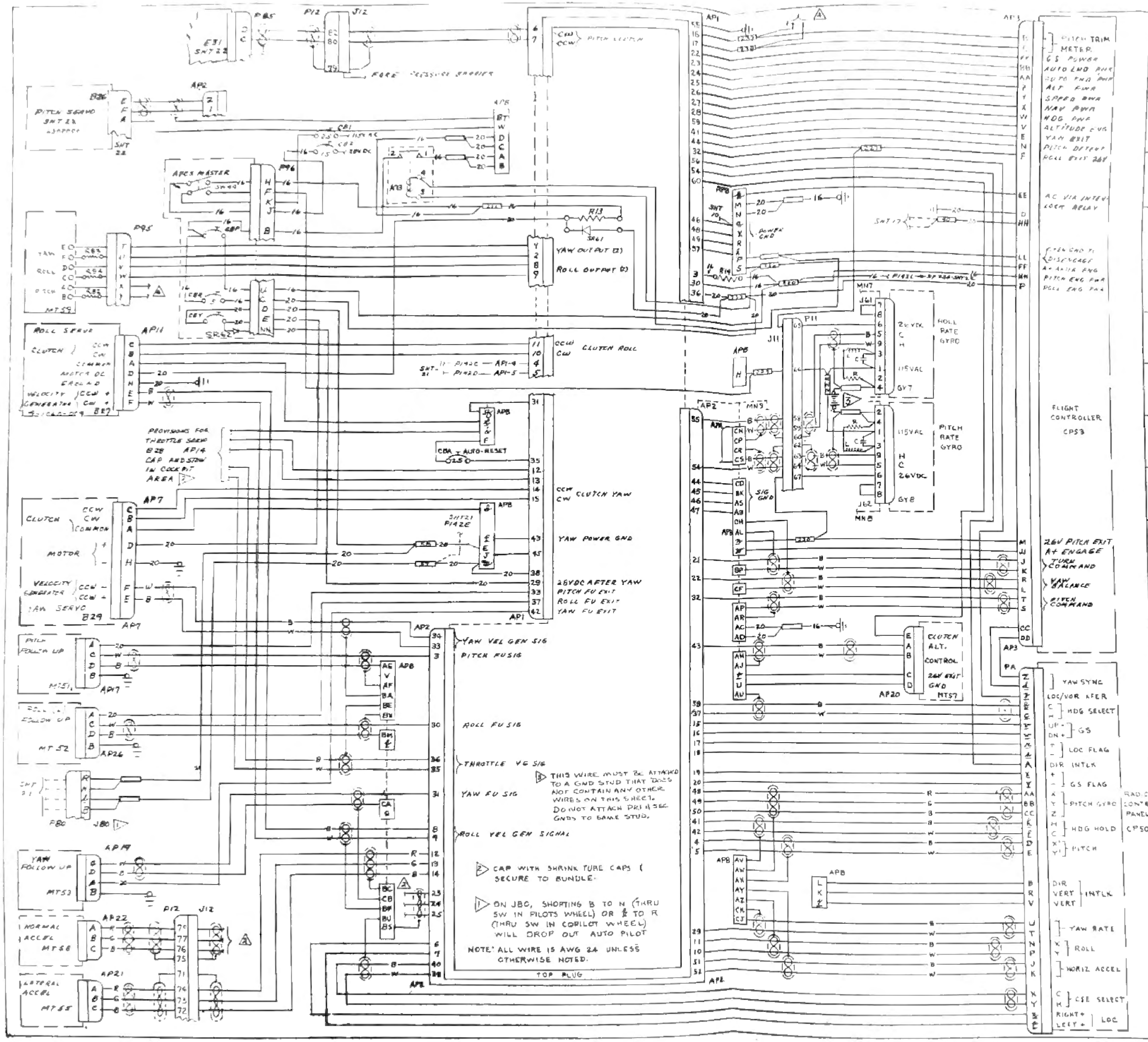

SYMBOL	PART NUMBER	NAME	VENDOR	MST DWG
PA	201358-1	HOUSING	AMP	PER W/D
	201RL-1	CLAMP		
	42981-1 (50 EA)	SOCKETS		
	200835-4 (2 EA)	CORNER GUIDE SOCKET		
	200833-4 (2 EA)	CORNER GUIDE PIN		
	201388-2 (2 EA)	JACKSCREW (M)		
APP	(PART OF MN9)	P/N 201[illegible]	AMP	—
A1A	(PART OF MN9)			
AP[illegible]	(PART OF MN9)	P/N DPE2MA-617-615-118-1001	CANNON	—
R4	[illegible] (PART OF MN9)	RESISTOR - 5% 50 WATT	DALE	
SW44	BR24KB	SWITCH - AUTO PILOT MASTER	[illegible]	23[illegible]
[illegible]	1N4[illegible]	DIODE	[illegible]	PER W/D
SR62	1N2069	DIODE		PER W/D
R84	3.9 K ½ W	RESISTOR (MILS [illegible]) [illegible]	OHM	PER W/D
R83	3.9 K ½ W	RESISTOR (MILS [illegible]) [illegible]	OHM	
R82	5.6 K ½ W	RESISTOR (MILS [illegible]) [illegible]	OHM	
AP20	PT06SE12-8S	PLUG	SCIN	
AP22 / AP21	MS3106-[illegible]	PLUG	—	
	MS3057-6B	CABLE CLAMP	—	
	AN3420-10A	SLEEVE	—	
	AN3420-6A	SLEEVE	—	
AP26	MS3106( )14S-5S	PLUG		
	MS3057-6B	CABLE CLAMP		
	AN3420-6A	SLEEVE		
	AN3420-4A	SLEEVE		
	MS3106 14S-5S	PLUG		
AP18	MS3057-6B	CABLE CLAMP	—	
	AN3420-4A	SLEEVE	—	
	AN3420-6A	SLEEVE	—	
AP17	MS3106( )14S-5S	PLUG	—	
	MS3057-6B	CABLE CLAMP	—	
	AN3420-6A	SLEEVE	—	
	AN3420-4A	SLEEVE	—	
P12			—	
P96	(SEE SHT 23)		—	
P95	(SEE SHT 15)		—	
R5-R6	PART OF MN7&8		—	
L5-L6	PART OF MN7&8		—	
P112	(SEE SHT 21)		—	
P80	(SEE SHT 21)		—	
AP11	PT06SE-12-8S	RECEPT	SCIN	
AP7	PT06SE-12-8S	RECEPT	SCIN	
AP3	200898-2	HOUSING	AMP	PER W/D
	42981-1 (34 EA)	SOCKETS		
	201224-1	CLAMP		
	200833-4 (2 EA)	CORNER GUIDE PINS		
	200835-4 (2 EA)	CORNER GUIDE SOCKETS		
	201389-2 (2 EA)	JACKSCREWS (F)		
MT59	3227-1	THREE AXIS TRIM INDICATOR	LEAR	2314091
MT58	9-9030	NORMAL ACCEL	LEAR	2318221
MT57	AC-7-1328D	ALTITUDE CONTROL	IDC	2314031
MT55	4-6040-01	LATERAL ACCEL	LEAR	2318221
MT53	4-3020-01	FOLLOW UP - YAW	LEAR	2312041
MT52	4-3020-01	FOLLOW UP - LEFT ROLL	LEAR	2324509
MT51	4-3020-01	FOLLOW UP - PITCH	LEAR	2331590
MN9	13-1010-001	AUTO PILOT RACK	LEAR	
MN8	13-1011-02	MOUNT - RATE GYRO (ROLL)	—	
MN7	13-1011-02	MOUNT - RATE GYRO (PITCH)	—	
K13	00285 (PART OF MN8)	RELAY	MAG	—
J80	(SEE SHT 21)			—
J62	(PART OF MN8)	RECEPT		—
J61	(PART OF MN7)	RECEPT		—
GY8	4-8008-01	RATE GYRO - PITCH	LEAR	
GY7	4-8008-01	RATE GYRO - ROLL	LEAR	
CP53	4-5020-01	FLIGHT CONTROLLER	LEAR	2315190
CP50	(SEE SHT 9)			—
C6	(PART OF MN7)	CAPACITOR -		—
C5	(PART OF MN8)	CAPACITOR -		—
CBY	BC1-5	CKT BKR -	BRILES	2314091
CBR	BC1-5	CKT BKR -	BRILES	2314091
CBP	BC1-10	CKT BKR -	BRILES	
CBA	PSA-2 (PART OF MN9)	CKT BKR - AUTO RESET	KLIXON	
CB2	BC1-15	CKT BKR - AFCS DAMPER 28VDC	BRILES	2316350
CB1	BC1-2	CKT BKR - AFCS DAMPER 115VAC	BRILES	2316350
B29	4-1060-01	SERVO - YAW	LEAR	2316500
B27	4-1060-01	SERVO - ROLL	LEAR	2315136

LEAR-JET

P. O. BOX 1280
WICHITA, KANSAS

TITLE: WD - AUTOMATIC FLIGHT CONTROL SYSTEM

	NAME	DATE
DRAWN	OVIATT G.I.	2-1-65
GROUP	[illegible]	3-3-65
CHECK	[illegible]	3-3-65
STRESS		
PROJ	[illegible]	3-4

DWG NO 2308011 A

SCALE NONE SHEET 10.00 OF

SYMBOL	PART NUMBER	NAME	VENDOR	INST DWG
FA	201358-1	HOUSING	AMP	PER W/D
	201182-1	CLAMP		
	42981-1 (50 EA)	SOCKETS		
	200835-4 (2 EA)	CORNER GUIDE SOCKET		
	200833-4 (2 EA)	CORNER GUIDE PIN		
APP	201388-2 (2 EA)	JACKSCREW (M)		
	(PART OF MN9)	P/N 201[illegible]-1		
AP[illegible]	(PART OF MN9)		AMP	—
AP1 & AP2	(PART OF MN9)	P/N DPX2MA-(15-675-338-0001)	CANNON	—
P14	[illegible] (PART OF MN9)			
SW44	4524-B	SWITCH-AUTO PILOT MASTER	C-H	—
SR61	1N6F20D	DIODE	IR	2314091 PER W/D
SR62	1N2069	DIODE	MOT	
R84	3.9K Ω 1/2 W	RESISTOR - (MOLD COMP)		
R83	3.9K Ω 1/2 W	RESISTOR - (MOLD COMP)		
R82	5.6K Ω 1/2 W	RESISTOR - (MOLD COMP)		
R13	MOF 10-10	RESISTOR - 10Ω 10 W	TRU-OHM	
AP20	PT06SE12-8S	PLUG	SCIN	
AP22	MS3106E-18S-1S	PLUG	—	
AP21	MS3057-8B	CABLE CLAMP	—	
	AN3420-10A	SLEEVE	—	
	AN3420-6A	SLEEVE	—	
AP26	MS3106[illegible] 14S-5S	PLUG	—	
	MS3057-6B	CABLE CLAMP	—	
	AN3420-6A	SLEEVE	—	
	AN3420-4A	SLEEVE	—	
	MS3106E 14S-5S	PLUG	—	
AP19	MS3057-6B	CABLE CLAMP	—	
	AN3420-4A	SLEEVE	—	
	AN3420-6A	SLEEVE	—	
	MS3106E 14S-5S	PLUG	—	
AP17	MS3057-6B	CABLE CLAMP	—	
	AN3420-2A	SLEEVE	—	
	AN3420-4A	SLEEVE	—	
P142	(REF SHT 21 2308000)			
P96	(REF SHT 17 2308000)			
P95	(REF SHT 6 2308000)			
P85	(REF SHT 22 2308000)			
P125	(REF SHT 6)			
J80	(REF SHT 21 2308000)			
J11 & P11	(REF SHT)			
J12 & P12	(REF SHT 6 2308000)			
AP11	PT06SE-12-8S	RECEPT	SCIN	
AP7	PT06SE-12-8S	RECEPT	SCIN	
AP3	200838-2	HOUSING	AMP	PER W/D
	42981-1 (34 EA)	SOCKETS		
	201224-1	CLAMP		
	200833-4 (2 EA)	CORNER GUIDE PINS		
	200835-4 (2 EA)	CORNER GUIDE SOCKETS		
	201389-2 (2 EA)	JACKSCREWS (F)		
MT59	5227-1	THREE AXIS TRIM IND	LEAR	2314091
MT57	AC-7-13280	ALTITUDE CONTROL	TDC	
MT55	4-5040-51	LATERAL ACCEL	LEAR	2318221
MT53	4-3020-01	FOLLOW UP - YAW	LEAR	2312041
MT52	4-3020-01	FOLLOW UP - LEFT ROLL	LEAR	2324505
MT51	4-3020-01	FOLLOW UP - PITCH	LEAR	2331510
MN9	13-010-02	AUTO PILOT RACK	LEAR	2318085
MN8	3-1011-02	MOUNT - RATE GYRO (ROLL)	—	2318201
MN7	13-1011-02	MOUNT - RATE GYRO (PITCH)	—	2318070
K13	30485 (PART OF MN9)	RELAY	MAG	—
J62	(PART OF MN8)	RECEPT		—
J6	(PART OF MN7)	RECEPT		—
GY8	4-8006-01	RATE GYRO - PITCH	LEAR	2318070
GY7	4-8008-01	RATE GYRO - ROLL	LEAR	2318201
CP57	4-5020-02	FLIGHT CONTROLLER	LEAR	2315130
CP50	SEE SHT 9	RADIO CONTROL PANEL	—	—
E28	4-2020-02	COMPUTER AMP (AUTOPILOT)	LEAR	2318085
CBY	112-205-101	CKT BKR -	WOODS	2314091
CBR	41-2-514-LN2 (5A)	CKT BKR -	ETA	2314091
CBP	41-2-514-LN2 (10A)	CKT BKR -		2314091
CBA	PSA-2 (PART OF MN9)	CKT BKR - AUTO RESET	KLIXON	—
CB2	41-2-514-LN2 (15A)	CKT BKR - AFCS DAMPER 28 VDC		2318350
CB1	41-2-514-LN2 (2A)	CKT BKR - AFCS DAMPER 115 VAC		2318350
B29	4-1060-004	SERVO - YAW	LEAR	2312500
B26	SEE 2308000 SHT 22	SERVO - PITCH	—	—
B27	4-1060-004	SERVO - ROLL	LEAR	2315136

LEAR-JET

P. O. BOX 1280
WICHITA, KANSAS

	NAME	DATE
DRAWN	OVIATT [illegible]	[illegible]
GROUP	[illegible]	2-3-65
CHECK	[illegible]	1-3-65
STRESS		
PROJ	[illegible]	[illegible]

TITLE: WD - AUTOMATIC FLIGHT CONTROL SYSTEM

DWG NO

SCALE NONE | 5-3-65 | SHEET 10.01 OF

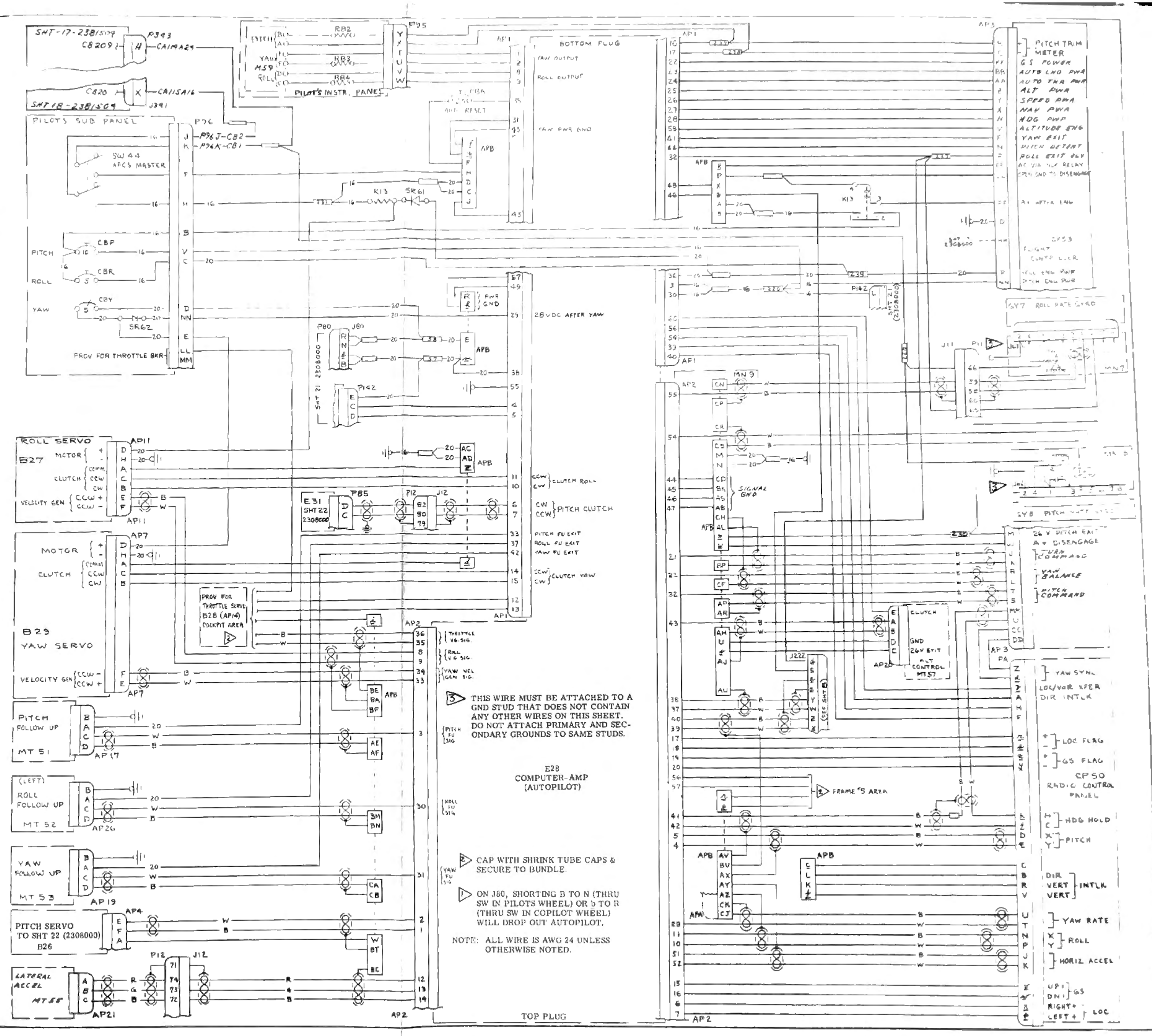

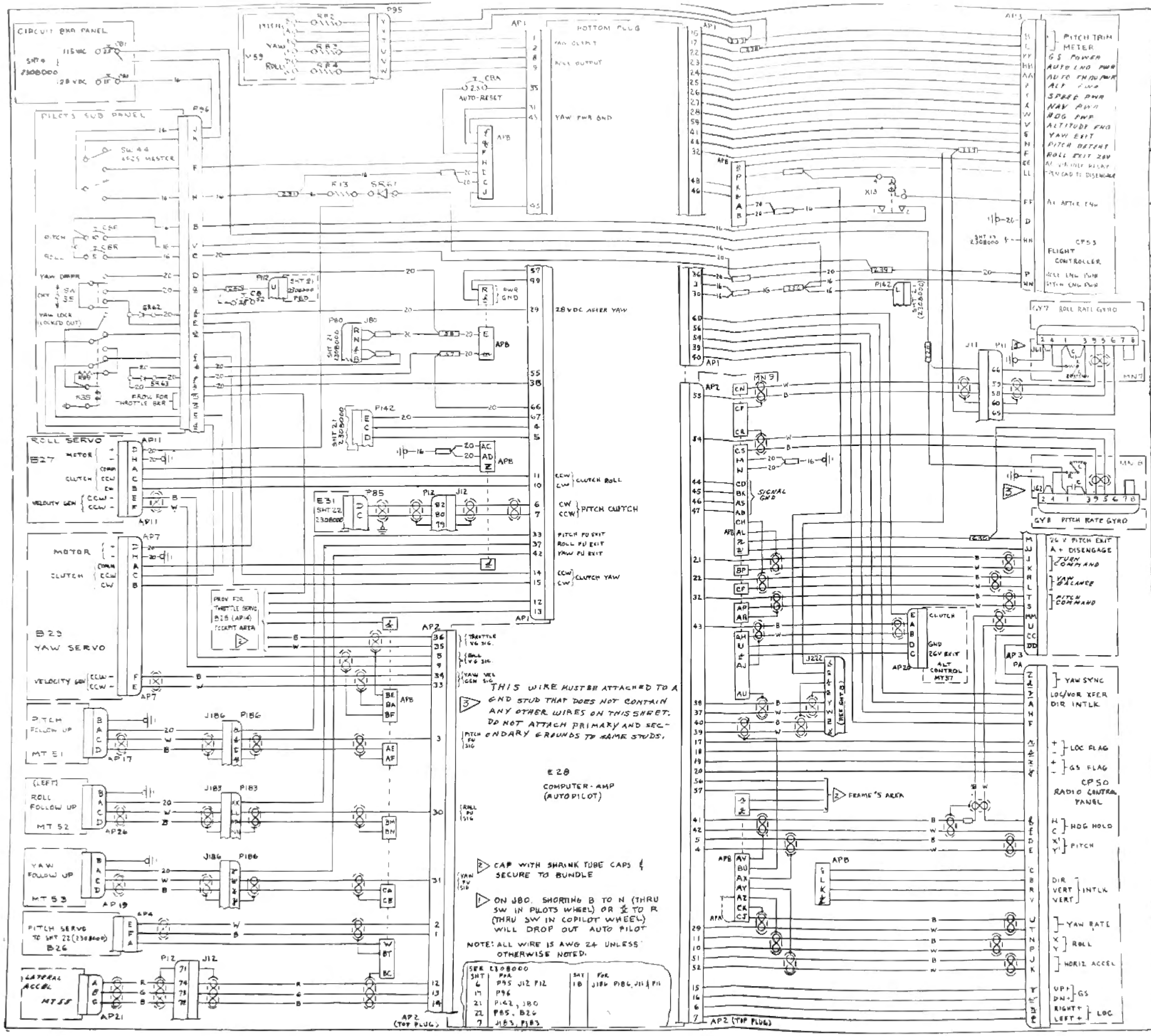

SYMBOL	PART NUMBER	NAME	VENDOR	INST DWG
R99	470 Ω 2 W	RESISTOR (MOLD COMP)	—	PER W/D
PA	201358-1 201182-1 42981-1 (50 EA) 200835-4 (2 EA) 200833-4 (2 EA) 201388-2 (2 EA)	HOUSING CLAMP SOCKETS CORNER GUIDE SOCKET CORNER GUIDE PIN JACKSCREW (M)	AMP	PER W/D
APB	(PART OF MN9)	[illegible]	AMP	
APA AP1 & AP2	(PART OF MN9) (PART OF MN9)	[illegible]	[illegible]	
SW44 SR61	AN24A-B [illegible]	SWITCH - AUTO PILOT MASTER DIODE	[illegible]	2314091 PER W/D
SR62 & 63 R84 R63 R62 R13	1N2069 [illegible] 3.9K Ω 1/2 W 5.6K Ω 1/2 W MOR 5-10	DIODE RESISTOR - (MOLD COMP) RESISTOR - (MOLD COMP) RESISTOR (MOLD COMP) RESISTOR - [illegible]	MOT [illegible]	
AP20 AP21	[illegible] MS3106F-[illegible] MS3057-[illegible] AN3420-10A AN3420-8A	PLUG PLUG CABLE CLAMP SLEEVE SLEEVE	[illegible]	
AP26	[illegible] MS3057-6A AN3420-6A AN3420-4A MS3106 4S-5S	PLUG CABLE CLAMP SLEEVE SLEEVE PLUG		
AP19 AP17	MS3057-6B AN3420-4A AN3420-4A MS3106-14S-5S MS3057-6B AN3420-6A AN3420-6A	CABLE CLAMP SLEEVE SLEEVE PLUG CABLE CLAMP SLEEVE SLEEVE	— — — — —	PER W/D
J222 SW35 K35	(REF SHT 4) 8858K42 2E-18-129	 SWITCH RELAY	 C-H MI-G	 2314089 2314089
AP11 AP7	PT06SE-12-8S PT06SE-12-8S	RECEPT RECEPT	SCIN SCIN	PER W/D
AP3	200838-2 42981-1 (34 EA) 201224-1 200833-4 (2 EA) 200835-4 (2 EA) 201389-2 (2 EA)	HOUSING SOCKETS CLAMP CORNER GUIDE PINS CORNER GUIDE SOCKETS JACKSCREWS (F)	AMP	PER W/D
MT59 MT57 MT55 MT53	5227-1 AC-7-13280 4-8040-01 4-3020-01	THREE AXIS TRIM IND ALTITUDE CONTROL LATERAL ACCEL FOLLOW UP - YAW	LEAR TDC LEAR LEAR	2314091 2314121 2318221 2312561
MT52 MT51 MN9 MN8 MN7	4-3020-01 4-3020-01 13-1010-02 13-1011-02 13-1011-02	FOLLOW UP - LEFT ROLL FOLLOW UP - PITCH AUTO PILOT RACK MOUNT - RATE GYRO (ROLL) MOUNT - RATE GYRO (PITCH)	LEAR LEAR LEAR — —	2324505 2331510 2318085 2318201 2318070
K13 J62 J61 GY8	00285 (PART OF MN9) (PART OF MN8) (PART OF MN7) 4-8006-01	RELAY RECPT RECPT RATE GYRO - PITCH	MAG LEAR	— — — 2318070
GY7 CP53 CP50 E28	4-8008-01 4-5020-02 SEE SHT 9 4-2020-02	RATE GYRO - ROLL FLIGHT CONTROLLER RADIO CONTROL PANEL COMPUTER-AMP (AUTOPILOT)	LEAR LEAR — LEAR	2318201 2315130 — 2318085
CBR CBP CBA	41-2-514-LNZ (5A) 41-2-514-LNZ (10A) PSA-2 (PART OF MN9)	CKT BKR - CKT BKR - CKT BKR - AUTO RESET	ETA ETA KLIXON	[illegible] 2314091 —
CB2 CB1 B29	41-2-314-LNZ (5A) 41-2-314-LNZ (2A) 4-1060-004	CKT BKR-APCS DAMPER 28 VDC CKT BKR-APCS DAMPER 115 VAC SERVO - YAW	ETA ETA LEAR	[illegible] [illegible] 2312500
B27	4-1060-004	SERVO - ROLL	LEAR	2315136

LEAR-JET P.O. BOX 1280 WICHITA, KANSAS

TITLE: WD - AUTOMATIC FLIGHT CONTROL SYSTEM

	NAME	DATE
DRAWN	OVIATT G.L.	2-3-65
GROUP	[illegible]	2-3-65
CHECK	[illegible]	3-1-65
STRESS		
PROJ	K47	2-4

DWG NO 2308011 A

SCALE NONE 7-1-65 SHEET 10 OF 20

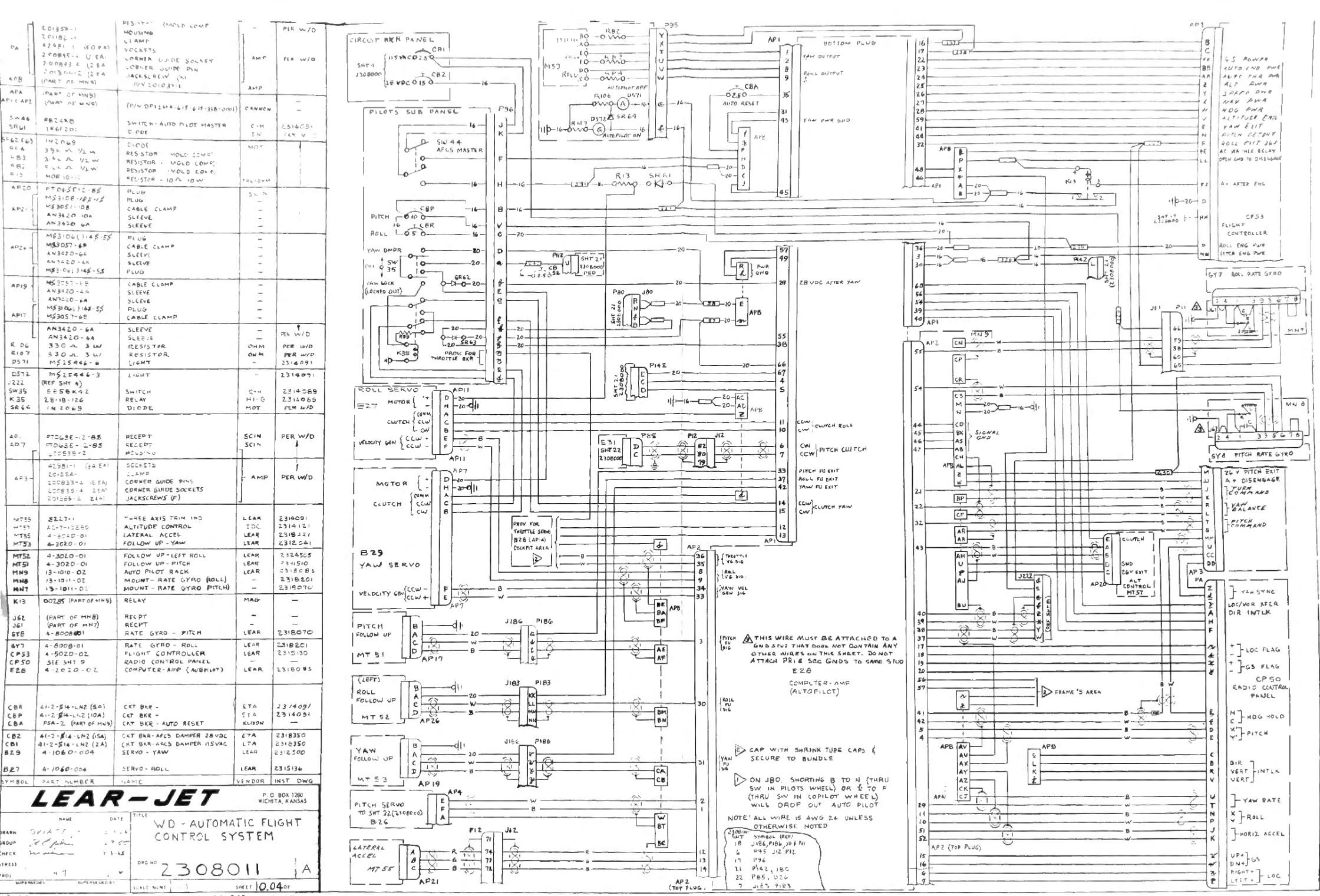

	201358-1	RESISTOR (MOLD COMP HOUSING	–	PER W/D
PA	201182-1	CLAMP		
	67981-1 (50 EA)	SOCKETS		
	200895-1 (5 EA)	CORNER GUIDE SOCKET	AMP	PER W/D
	200833-1 (2 EA)	CORNER GUIDE PIN		
	201364-1 (2 EA)	JACKSCREW (M)		
A/B	(PART OF MN8)	P/N 201039-1	AMP	
APA	(PART OF MN8)			
API CAP2	(PART OF MN8)	(P/N DP12MA-6S-6S-318-3001)	CANNON	–
SW46	RB24RB	SWITCH-AUTO PILOT MASTER	C-H	2314089
SR61	1R6F20	DIODE	IN	PER W/D
SR62,63	IN2069	DIODE	MOT	
R64	39K Ω 1/2 W	RESISTOR (MOLD COMP)		
R83	3.6K Ω 1/2 W	RESISTOR - (MOLD COMP)		
R82	6.2K Ω 1/2 W	RESISTOR - (MOLD COMP)		
R13	MOR 10-10	RESISTOR - 10A 10W	THU-OHM	
AP20	MS3106E12-8S	PLUG	SCIN	
	MS310E-18S-4	PLUG	–	
AP21	MS3057-10B	CABLE CLAMP	–	
	AN3420-10A	SLEEVE	–	
	AN3420-6A	SLEEVE	–	
	MS3106(1)14S-5S	PLUG	–	
AP26	MS3057-6B	CABLE CLAMP	–	
	AN3420-6A	SLEEVE	–	
	AN3420-4A	SLEEVE	–	
	MS3106(1)16S-5S	PLUG	–	
AP17	MS3057-6B	CABLE CLAMP	–	
	AN3420-6A	SLEEVE	–	PER W/D
	AN3420-4A	SLEEVE	–	
R 86	330 Ω 3 W	RESISTOR	OHM	PER W/D
R107	330 Ω 3 W	RESISTOR	OHM	PER W/D
D571	MS25446-3	LIGHT	–	2314091
D572	MS25446-3	LIGHT	–	2314091
J222	(REF SHT 4)			
SW35	8858K42	SWITCH	C-H	2314089
K35	28-18-126	RELAY	HI-G	2314069
SR66	IN2069	DIODE	MOT	PER W/D
AP7	PTO6SE-12-8S	RECEPT	SCIN	PER W/D
AP17	PTO6SE-8-8S	RECEPT	SCIN	
	201358-2	HOUSING		
AP3	67981-1 (50 EA)	SOCKETS	AMP	PER W/D
	201364-1	CLAMP		
	200833-1 (8 EA)	CORNER GUIDE PINS		
	200895-1 (8 EA)	CORNER GUIDE SOCKETS		
	201359-2 (24)	JACKSCREWS (F)		
MT55	5227-1	THREE AXIS TRIM IND	LEAR	2314091
MT57	AC-7-12270	ALTITUDE CONTROL	IDC	2314121
MT56	4-5020-01	LATERAL ACCEL	LEAR	2318227
MT53	4-3020-01	FOLLOW UP - YAW	LEAR	2312041
MT52	4-3020-01	FOLLOW UP - LEFT ROLL	LEAR	2324505
MT51	4-3020-01	FOLLOW UP - PITCH	LEAR	2311510
MN9	13-1010-02	AUTO PILOT RACK	LEAR	2318085
MN8	13-1011-02	MOUNT - RATE GYRO (ROLL)	–	2318201
MN7	13-1011-01	MOUNT - RATE GYRO (PITCH)	–	2318076
K13	00285 (PART OF MN9)	RELAY	MAG	–
J62	(PART OF MN8)	RECPT	–	–
J61	(PART OF MN7)	RECPT	–	–
GY8	4-8008-01	RATE GYRO - PITCH	LEAR	2318076
GY7	4-8008-01	RATE GYRO - ROLL	LEAR	2318201
CP53	4-5020-02	FLIGHT CONTROLLER	LEAR	2315130
CP50	SEE SHT 9	RADIO CONTROL PANEL	–	–
E28	4-2020-02	COMPUTER-AMP (AUTOPILOT)	LEAR	2318085
CBR	41-2-5¼-LNZ (5A)	CKT BKR -	ETA	2314091
CBP	41-2-5¼-LNZ (10A)	CKT BKR -	ETA	2314051
CBA	PSA-2 (PART OF MN9)	CKT BKR - AUTO RESET	KLIXON	–
CB2	41-2-5¼-LNZ (15A)	CKT BKR-AFCS DAMPER 28VDC	ETA	2318350
CB1	41-2-5¼-LNZ (2A)	CKT BKR-AFCS DAMPER 115VAC	LTA	2318350
B29	4-1060-004	SERVO - YAW	LEAR	2312500
B27	4-1060-004	SERVO - ROLL	LEAR	2315136
SYMBOL	PART NUMBER	NAME	VENDOR	INST DWG

LEAR-JET P. O. BOX 1280 WICHITA, KANSAS

	NAME	DATE
DRAWN	SWIFT	2-15-65
GROUP	[illegible]	2-15-65
CHECK	[illegible]	7-15-65
STRESS		
PROJ	M.T.	

SUPERSEDES: SUPERSEDED BY:

TITLE: WD - AUTOMATIC FLIGHT CONTROL SYSTEM

DRG NO 2308011 A

SCALE NONE SHEET 10.04 OF

2308000 SHT	SYMBOL (REF)
18	J186, PI86, J183 & PI3
6	P95 J12, PI2
17	P96
21	P162, J80
22	P85, J226
7	J187, PI83

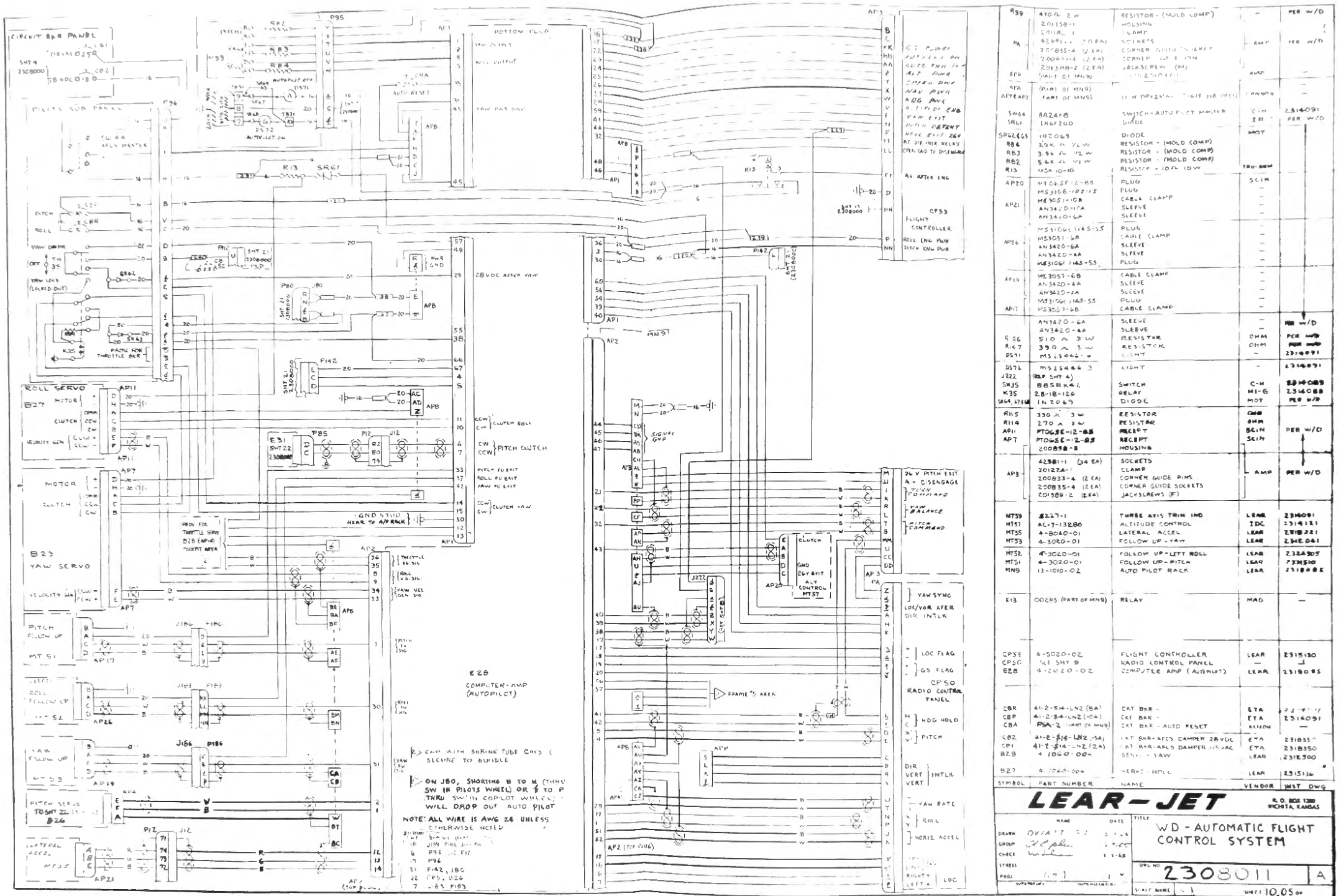

SYMBOL	PART NUMBER	NAME	VENDOR	WST DWG
R99	4702 2W	RESISTOR - (MOLD COMP)	—	PER W/D
	201358-1	HOUSING	AMP	PER W/D
	201191-1	LAMP		
PA	42981-1 (9 EA)	SOCKETS		
	200835-4 (2 EA)	CORNER GUIDE SOCKET		
	200834-4 (2 EA)	CORNER GUIDE PINS		
	201389-2 (2 EA)	JACKSCREWS (M)		
APR	(PART OF MN9)	[illegible]	AMP	—
APA	(PART OF MN9)		—	—
APT#APZ	PART OF MN9	[illegible]	AMPHEN	—
SW46	8824KB	SWITCH-AUTO PILOT MASTER	C-H	2314091
SR61	1N4720D	DIODE	IR	PER W/D
SR62,63	1N2069	DIODE	MOT	
R84	3.9K Ω ½W	RESISTOR - (MOLD COMP)	—	
R83	3.9K Ω ½W	RESISTOR - (MOLD COMP)	—	
R82	5.6K Ω ½W	RESISTOR - (MOLD COMP)	—	
R13	MDA 10-10	RESISTOR - 10Ω 10W	TRU-OHM	
APZ20	MTC6ST-2-85	PLUG	SCIN	
	MS3106R-22-21S	PLUG	—	
	MS3057-16B	CABLE CLAMP	—	
APZ1	AN3420-16A	SLEEVE	—	
	AN3420-6A	SLEEVE	—	
	MS3106F 14S-5S	PLUG	—	
APZ6	MS3057-6B	CABLE CLAMP	—	
	AN3420-6A	SLEEVE	—	
	AN3420-8A	SLEEVE	—	
	MS3106F 14S-5S	PLUG	—	
APZ3	MS3057-6B	CABLE CLAMP	—	
	AN3420-6A	SLEEVE	—	
	AN3420-8A	SLEEVE	—	
	MS3106F 14S-5S	PLUG	—	
APZ7	MS3057-6B	CABLE CLAMP	—	
	AN3420-6A	SLEEVE	—	PER W/D
	AN3420-4A	SLEEVE	—	PER W/D
R86	510 Ω 3W	RESISTOR	OHM	PER W/D
R87	390 Ω 3W	RESISTOR	OHM	2314091
DS71	MS25464-3	LIGHT	—	2314091
J222	(REF SHT 4)		C-H	2314089
SW35	8858K42	SWITCH	MI-G	2314088
K35	28-18-126	RELAY	MOT	PER W/D
SR64,65,66	1N2069	DIODE		
R115	330 Ω 3W	RESISTOR	OHM	
R114	270 Ω 3W	RESISTOR	OHM	
APII	PTO6SE-12-8S	RECEPT	SCIN	PER W/D
AP7	PTO6SE-12-8S	RECEPT	SCIN	
	200888-2	HOUSING		
AP3	42981-1 (34 EA)	SOCKETS	AMP	PER W/D
	201224-1	CLAMP		
	200833-4 (2 EA)	CORNER GUIDE PINS		
	200835-4 (2 EA)	CORNER GUIDE SOCKETS		
	201389-2 (2 EA)	JACKSCREWS (F)		
MT59	5227-1	THREE AXIS TRIM IND	LEAR	2314091
MT51	AC-7-132B0	ALTITUDE CONTROL	IDC	2314131
MT55	4-8040-01	LATERAL ACCEL	LEAR	2318221
MT53	4-3020-01	FOLLOW UP - YAW	LEAR	2318041
MT52	4-3020-01	FOLLOW UP-LEFT ROLL	LEAR	2318305
MT51	4-3020-01	FOLLOW UP-PITCH	LEAR	2318310
MN9	13-1010-02	AUTO PILOT RACK	LEAR	2318085
K13	00285 (PART OF MN9)	RELAY	MAG	—
CP53	4-5020-02	FLIGHT CONTROLLER	LEAR	2315130
CP50	REF SHT 9	RADIO CONTROL PANEL	—	—
E28	4-2020-02	COMPUTER AMP (AUTOPILOT)	LEAR	2318085
CBR	41-2-5A-LN2 (5A)	CKT BKR -	ETA	2314091
CBP	41-2-3A-LN2 (10A)	CKT BKR -	ETA	2314091
CBA	P5A-2 (PART OF MN9)	CKT BKR - AUTO RESET	AIRPAX	—
CB2	41-2-5A-LN2 (5A)	CKT BKR-AFCS DAMPER 28 VDC	ETA	2318350
CB1	41-2-3A-LN2 (2A)	CKT BKR-AFCS DAMPER 115 VAC	ETA	2318350
BZ9	4-1060-004	SENSOR - YAW	LEAR	2318300
B27	4-1060-004	SERVO - ROLL	LEAR	2315136

LEAR-JET — P.O. BOX 1289, WICHITA, KANSAS

	NAME	DATE
DRAWN	DYKATT	2-1-66
GROUP	[illegible]	2-7-66
CHECK	[illegible]	2-15-66
STRESS		
PROJ	[illegible]	

TITLE: WD - AUTOMATIC FLIGHT CONTROL SYSTEM

DWG NO 2308011 A

SHEET 10.05

SYMBOL	PART NUMBER	NAME	VENDOR	INST DWG
R99	470 Ω 2W	RESISTOR (MOLD COMP)		
AP9	1805-1FSH (PART OF AP1)	CLEFT		PER W/D
AP4	1805-2THC	PLUG	–	PER W/D
AP1 & AP2	(PART OF MN9)	P/N DPXBMA-67J-67S-34B-0011	CANNON	–
SW44	8824K8	SWITCH - AUTO PILOT MASTER	C-H	2314091
SR61	1N5F20D	DIODE	TR	PER W/C
SR62(63)	1N2069	DIODE	MOT	
R84	3.9K Ω ½ W	RESISTOR - (MOLD COMP)		
R83	3.9K Ω ½ W	RESISTOR - (MOLD COMP)		
R82	8.6K Ω ½ W	RESISTOR - (MOLD COMP)		
R13	HOR 10-10	RESISTOR - 10 Ω 10 W	TRU-OHM	
AP20	PT06E12-8S	PLUG	SCIN	
AP21	MS3108	PLUG	–	
	MS3057-10B	CABLE CLAMP	–	
	AN3420-10A	SLEEVE	–	
	AN3420-6A	SLEEVE	–	
AP26	MS3106(114S-5	PLUG		
	MS3057-6B	CABLE CLAMP	–	
	AN3420-6A	SLEEVE	–	
	AN3420-4A	SLEEVE	–	
	MS3106(14S-5S	PLUG	–	
AP19	MS3057-6B	CABLE CLAMP	–	
	AN3420-4A	SLEEVE	–	
	AN3420-6A	SLEEVE	–	
AP17	MS3106(14S-5S	PLUG	–	
	MS3057-6B	CABLE CLAMP	–	
	AN3420-6A	SLEEVE	–	
	AN3420-4A	SLEEVE	–	PER W/D
R106	510 Ω 3 W	RESISTOR	OHM	PER W/D
R107	390 Ω 3 W	RESISTOR	OHM	PER W/D
DS71	MS25446-6	LIGHT	–	2314091
DS72	MS25446-3	LIGHT	–	2314091
J222	(REF SHT 4)			
SW35	8858K42	SWITCH	C-H	2314089
K35	28-18-126	RELAY	HI-G	2314089
SR64, 67(68)	1N2069	DIODE	MOT	PER W/D
R115	330 Ω 3 W	RESISTOR	OHM	PER W/D
R114	270 Ω 3 W	RESISTOR	OHM	PER W/D
AP11	PT06SE-12-8S	PLUG	SCIN	PER W/D
AP7	PT06SE-12-8S	PLUG	SCIN	PER W/D
AP3	SB03-35TSNL	PLUG	–	PER W/D
PA	SB03-31TSNR	PLUG	–	PER W/D
MT59	8227-1	THREE AXIS TRIM IND	LEAR	2314091
MT57	AC-7-13280	ALTITUDE CONTROL	TDC	2314122
MT55	4-8040-01	LATERAL ACCEL	LEAR	2318221
MT53	4-3020-01	FOLLOW UP - YAW	LEAR	2342041
MT52	4-3020-01	FOLLOW UP - LEFT ROLL	LEAR	2324505
MT51	4-3020-01	FOLLOW UP - PITCH	LEAR	2331510
MN9	13-010-02	AUTO PILOT RACK	LEAR	2318085
K13	CC295 (PART OF MN9)	RELAY	MAG	—
CP53	4-5020-02	FLIGHT CONTROLLER	LEAR	2315130
CP50	SEE SHT 9	RADIO CONTROL PANEL	—	—
E28	4-2020-02	COMPUTER AMP (AUTOPILOT)	LEAR	2318085
CBF	41-2-514-LN2 (5A)	CKT BKR -	ETA	2314091
CBP	41-2-314-LN2 (10A)	CKT BKR -	ETA	2314091
CBA	PSR-2 (PART OF MN9)	CKT BKR - AUTO RESET	KLIXON	—
CB2	41-2-514-LN2 (15A)	CKT BKR - AFCS DAMPER 28 VDC	ETA	2318350
CB1	41-2-514-LN2 (2A)	CKT BKR - AFCS DAMPER 115 VAC	ETA	2318350
B29	4-1060-004	SERVO - YAW	LEAR	2312500
B27	4-1060-004	SERVO - ROLL	LEAR	2315136

LEAR-JET P.O. BOX 1280 WICHITA, KANSAS

TITLE: WD - AUTOMATIC FLIGHT CONTROL SYSTEM

DWG NO. 2308011 A

1-15-66 10.07

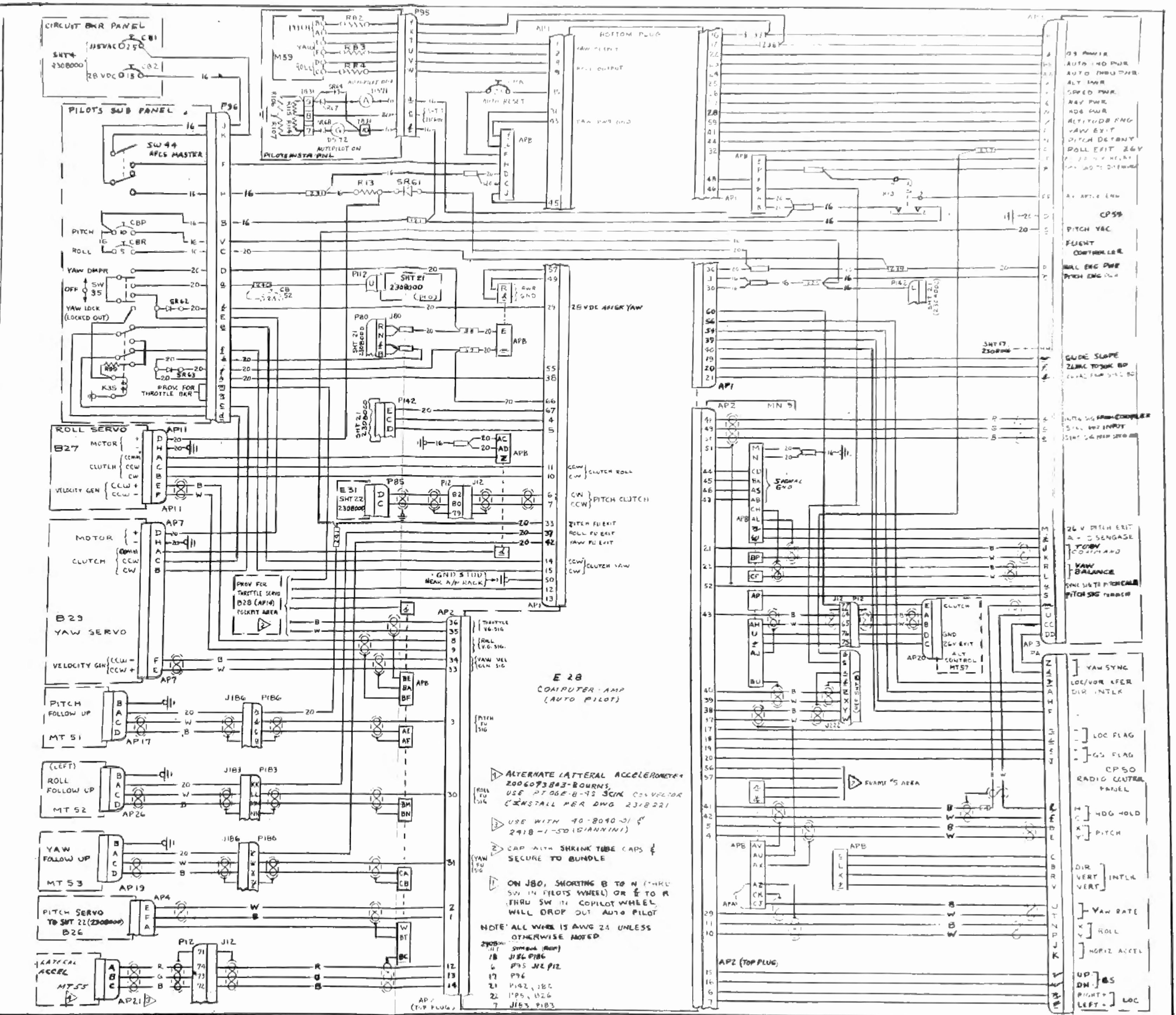

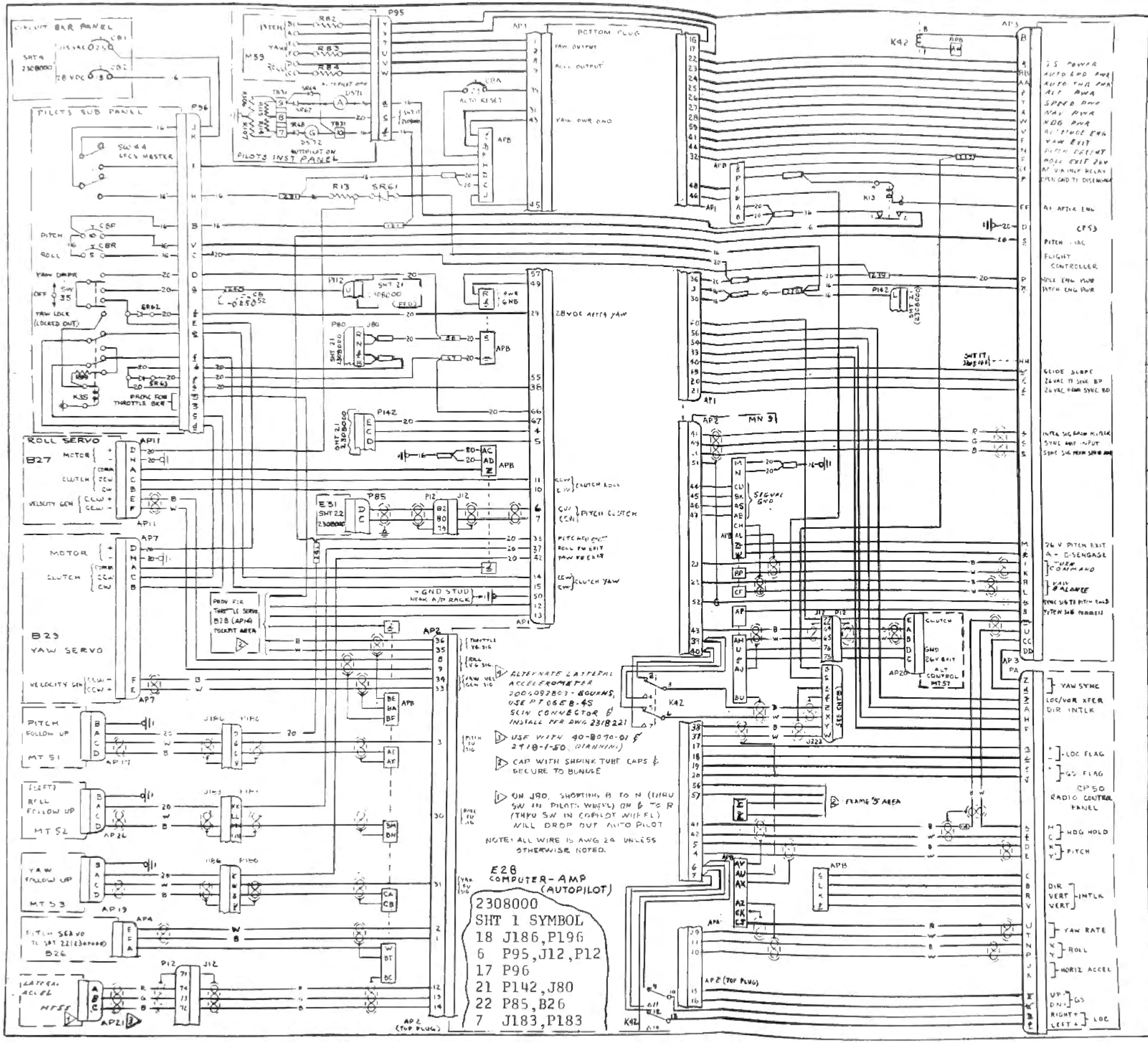

SYMBOL	PART NUMBER	NAME	VENDOR	INST DWG
R99	470 Ω 2 W	RESISTOR - [illegible]	–	PER W/D
APE	SBC5 [illegible] (PART OF MN9)	RELAY		
A1A	5805-27PC	PLUG		PER W/D
AP16 & AP17	(PART OF MN9)	(P/N 8PR2MA-675-618-318-0901)	[illegible]	
SW44	8824K8	SWITCH - AUTO PILOT MASTER	C-H	2314091
SR61	1N6F250	DIODE	[illegible]	PER W/D
SR62 & 63	1N2069	DIODE	MOT	
RB4	3.9K Ω 1/2 W	RESISTOR - (MOLD COMP)		
RB3	3.9K Ω 1/2 W	RESISTOR - (MOLD COMP)		
RB2	5.6K Ω 1/2 W	RESISTOR - (MOLD COMP)		
R13	MOP 10-10	RESISTOR - 10 Ω 10 W	TRU-OHM	
AP20	PT06E-12-8S	PLUG	SCIN	
	MS3106-18-1S	PLUG		
	MS3057-10B	CABLE CLAMP	–	
AP21	AN3420-[illegible]	SLEEVE	–	
	AN3420-6A	SLEEVE	–	
AP26	MS3106-14S-5S	PLUG		
	MS3057-6B	CABLE CLAMP		
	AN3420-6A	SLEEVE	–	
	AN3420-4A	SLEEVE		
	MS3106-14S-5S	PLUG		
AP13	MS3057-6B	CABLE CLAMP	–	
	AN3420-4A	SLEEVE	–	
	AN3420-6A	SLEEVE	–	
	MS3106-14S-5S	PLUG	–	
AP17	MS3057-6B	CABLE CLAMP	–	
	AN3420-6A	SLEEVE	–	PER W/D
	AN3420-4A	SLEEVE	–	
R106	510 Ω 3 W	RESISTOR	OHM	PER W/D
R107	390 Ω 3 W	RESISTOR	OHM	PER W/D
DS71	MS25646-[illegible]	LIGHT	–	2314091
DS72	MS25646-3	LIGHT	–	2314091
J222	(REF SHT 4)			
SW35	8858K42	SWITCH	C-H	2314089
K35	28-18-126	RELAY	M1-G	2314089
SR64, LT64	1N2069	DIODE	MOT	PER W/D
R115	330 Ω 3 W	RESISTOR	OHM	PER W/D
R114	270 Ω 1 W	RESISTOR	OHM	PER W/D
AP11	PT06SE-12-8S	PLUG	SCIN	PER W/D
AP7	PT06SE-12-8S	PLUG	SCIN	PER W/D
AP3	5803-35TSNL	PLUG	–	PER W/D
PA	5803-31TSNR	PLUG	–	PER W/D
MT59	3227-1	THREE AXIS TRIM IND	LEAR	2314091
MT57	AC-7-13280	ALTITUDE CONTROL	TDC	2314122
MT55	4-8040-01	LATERAL ACCEL	LEAR	2318221
MT53	4-3020-01	FOLLOW UP - YAW	LEAR	2312041
MT52	4-3020-01	FOLLOW UP - LEFT ROLL	LEAR	2324505
MT51	4-3020-01	FOLLOW UP - PITCH	LEAR	2331510
MN9	13-1010-03	AUTO PILOT RACK	LEAR	2318064
K42	57-10/40 / MS 9113	RELAY SOCKET / RELAY (PART OF MN9)	AMPH / [illegible]	
K13	C0285 (PART OF MN9)	RELAY	MAG	–
CP53	4-5022-01	FLIGHT CONTROLLER	LEAR	2314071
CP50	SEE SHT 9	RADIO CONTROL PANEL	–	–
E28	4-2020-03	COMPUTER AMP (A/PILOT)	LEAR	2318064
CBR	41-2-514-LN2 (5A)	CKT BKR -	ETA	2314091
CBP	41-2-514-LN2 (10A)	CKT BKR -	ETA	2314091
CBA	PSA-2 (PART OF MN9)	CKT BKR - AUTO RESET	KLIXON	–
CB2	41-2-514-LN2 (5A)	CKT BKR - AFCS DAMPER 28 VDC	ETA	2318350
CB1	41-2-514-LN2 (2A)	CKT BKR - AFCS DAMPER 115 VAC	ETA	2318350
B29	4-1060-004	SERVO - YAW	LEAR	2312500
B27	4-1060-004	SERVO - ROLL	LEAR	2315136

LEAR-JET P. O. BOX 1280 WICHITA, KANSAS

TITLE: WD - AUTOMATIC FLIGHT CONTROL SYSTEM

DRAWN: OVIATT | CHECK | DWG NO 2308011 | A

SCALE NONE | 1-15-66 | SHEET 10.09

SYMBOL	PART NUMBER	NAME	VENDOR	INST DWG
R99	47C-3	RESISTOR - (MOLD COMP)	—	PER W/D
AP8	58C5	ENTRY		
AP4	5805-27PC	PLUG		PER W/D
	(PART OF MK9)	P/O OP12MA-675-675 338-0001	CANNON	
SW44	8824-R	SWITCH-AUTO PILOT MASTER	C-H	2314091
SRG1	1N4720E	DIODE	IR	PER W/D
SRG2 & G3	1N	DIODE		
RB4	39K	RESISTOR - (MOLD COMP)	MOT	
RB3	39K	RESISTOR - (MOLD COMP)		
RB2	56K	RESISTOR - (MOLD COMP)		
R13	MOF-1C-10	RESISTOR - 10Ω 10W	TRU-OHM	
AP10	PT06SE12-8S	PLUG	SCIN	
AP2	MS3108	PLUG	—	
	MS3057-1CB	CABLE CLAMP	—	
	AN3420-10A	SLEEVE	—	
	AN3420-6A	SLEEVE	—	
AP1	MS3106	PLUG	—	
	MS3057	CABLE CLAMP	—	
	AN3420-6A	SLEEVE	—	
	AN3420-4A	SLEEVE	—	
	MS3106	PLUG	—	
AP9	MS3057-6B	CABLE CLAMP	—	
	AN3420-4A	SLEEVE	—	
	AN3420-6A	SLEEVE	—	
	MS3106L 14S-5S	PLUG	—	
AP17	MS3057-4B	CABLE CLAMP	—	
	AN3420-6A	SLEEVE	—	PER W/D
	AN3420-4A	SLEEVE	—	
J222	(SEE SHT 4)			
SW35	8858K42	SWITCH	C-H	2314089
K35	28-18-124	RELAY	HI-G	2314089
AP11	PT06SE-12-8S	PLUG	SCIN	PER W/D
AP7	PT06SE-12-8S	PLUG	SCIN	PER W/D
AP3	5803-35TSNL	PLUG		PER W/D
PA	5803-31TSNR	PLUG	—	PER W/D
M59	8227-1	THREE AXIS TRIM IND	LEAR	2314091
MT57	AC-7-1326Q	ALTITUDE CONTROL	IDC	2314122
MT55	4-6040-51	LATERAL ACCEL	LEAR	2318321
MT53	4-3020-01	FOLLOW UP-YAW	LEAR	2312041
MT52	4-3020-01	FOLLOW UP-LEFT ROLL	LEAR	2324505
MT51	4-3020-01	FOLLOW UP-PITCH	LEAR	2331510
MN9	13-1010-03	AUTO PILOT RACK	LEAR	2318064
K42	57-1 / MS	RELAY SOCKET PART OF MN9 / RELAY	AMPH / POTTER & B	
K13	OO (PART OF MN9)	RELAY	MAG	—
CP53	4-5022-01	FLIGHT CONTROLLER	LEAR	2314091
CP50	SEE SHT 9	RADIO CONTROL PANEL		
E28	4-2020-03	COMPUTER AMP (AUTOPILOT)	LEAR	2318064
CBR	41-2-514-LN2 (5A)	CKT BKR -	ETA	2314091
CBP	41-2-514-LN2 (10A)	CKT BKR -	ETA	2314091
CBA	PS4-2 (PART OF MN9)	CKT BKR - AUTO RESET	KLIXON	
CB2	41-2-514-LN2 (5A)	CKT BKR-AFCS DAMPER 28VDC	ETA	2318350
CB1	41-2-514-LN2 (2A)	CKT BKR-AFCS DAMPER 115VAC	ETA	2318350
B29	4-1060-004	SERVO - YAW	LEAR	2318300
B27	4-1060-004	SERVO - ROLL	LEAR	2315136

LEAR-JET P.O. BOX 1280 WICHITA, KANSAS

TITLE: WD - AUTOMATIC FLIGHT CONTROL SYSTEM

DWG NO 2308011 A

SCALE NONE 4-22-66 SHEET 10.11

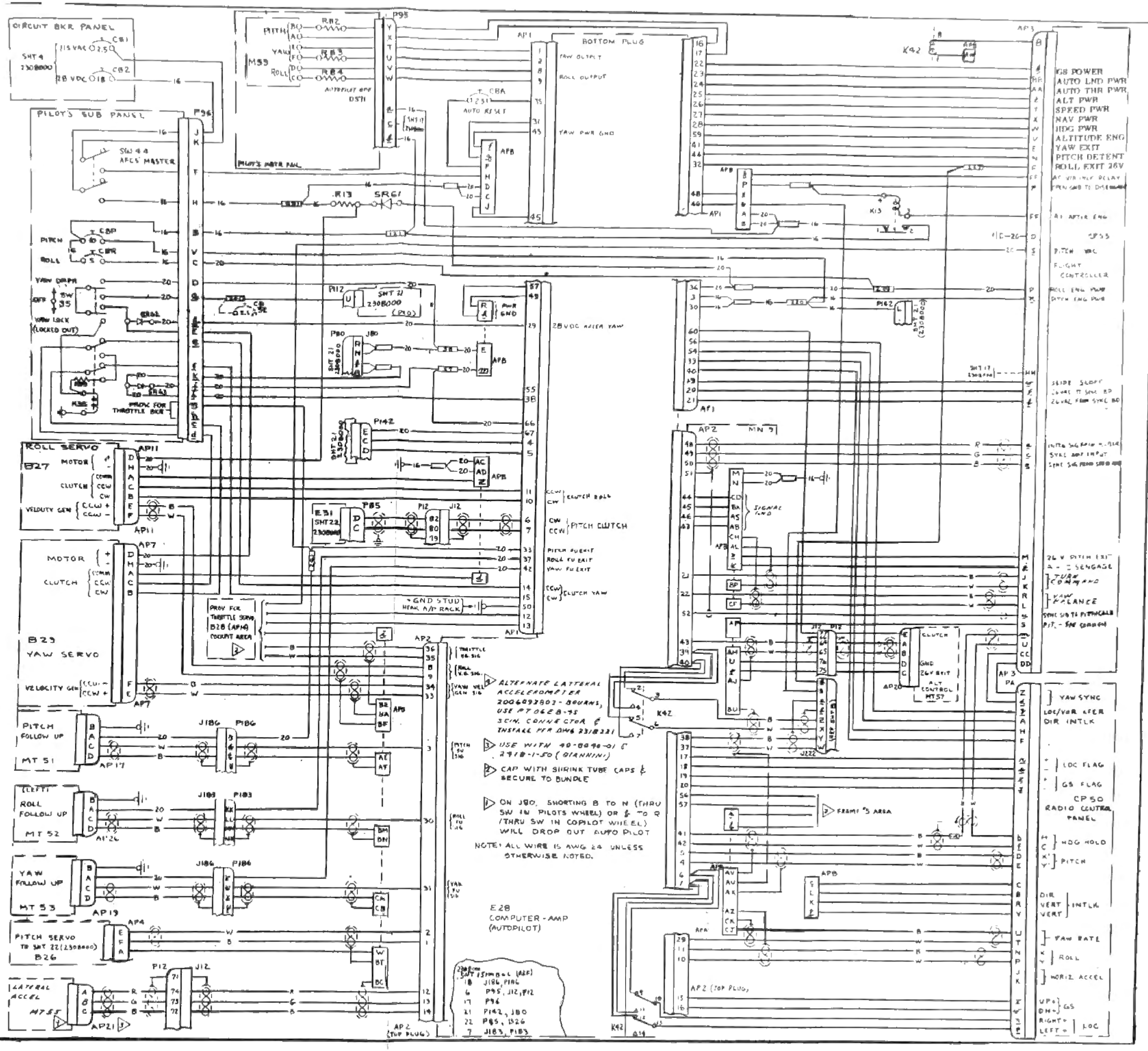

A

AC Power Distribution 7-10
AC Power System 7-10
Inverters 7-11
Inverter Power Relays 7-12
Inverter Switching Relay 7-11
Step-Down Transformer 7-11
Accumulator, Hydraulic 3-8
Actuators
Aileron Trim Tab 2-13
Flap 2-15
Horizontal Stabilizer 2-30A
Main Gear 3-73
Main Gear Inboard Door 3-81
Nose Gear 3-46
Nose Gear Steering 3-57
Nose Gear Uplatch 3-51
Rudder Trim Tab 2-30
Spoiler 2-22
Aileron Control System 2-4
Removal and Installation 2-9
Rigging 2-9
Trouble Shooting 2-4
Aileron-Rudder Interconnect, Adjustment and Rigging 2-39
Aileron Spoiler Tab Replacement 2-15
Aileron Trim Tab System 2-13
Actuator 2-13
Removal and Installation 2-15
Trouble Shooting 2-13
Air Bleed Check Valves 4-10
Air Bleed Shutoff Valves 4-10
Air Conditioning System, Cabin 4-10
Air Bleed Check Valves 4-10
Air Bleed Shutoff Valves 4-10
Flow Control Valve 4-17
Heat Exchanger 4-10
Ram Air Damper 4-17
Actuator 4-17
Rigging 4-17
Temperature Controls 4-17
Air Exhaust Control Valve, Cabin 4-23
Aircraft
Access and Inspection Provisions 1-3
Exterior Cleaning and Care 1-24
General Description 1-1
Ground Handling 1-3
Interior Cleaning and Care 1-25
Leading Particulars 1-2
Principal Dimensions 1-3
Weighing 1-3
Wing Removal and Installation 2-2
Airspeed and Mach Indicator 6-16
Airspeed Indicator 6-16
Altimeter 6-16A
Altitude Controller, Cabin Pressure 4-19
Ammeters 6-18
Aneroid Switch, Oxygen 4-31
Anti-Ice Additives 1-4F
Anti-Ice System, Engine 5-16
Anti-Ice System, Engine Nacelle 5-16
Anti-Ice System, Wing Leading Edge 4-34A
Anti-Skid Brake System 3-85
Generator Installation 3-85
Generator Removal 3-85

A

Operation 3-85
Ash Tray 2-69
Aspirator, Hydraulic 3-8
Autopilot Capstan Slip Clutch Check and Adjustment
Pitch 2-38
Roll 2-10
Yaw 2-28
Autopilot Followup Replacement and Adjustment
Pitch 2-38
Roll 2-11
Yaw 2-29
Auxiliary Battery System 7-10
Auxiliary Hydraulic Pump 3-8

B

Baggage Compartment 2-56
Batteries
Auxiliary System 7-10
Emergency Operation 7-10
Normal Operation 7-10
Removal and Installation 7-10
Batteries, Servicing 1-18
Battery Charging (Bench) 1-19
Battery Charging With Battery Installed in Aircraft 1-19
Battery Cleaning 1-18
Battery Discharge-Recharge Reconditioning Cycle 1-18A
Battery Maintenance Precautions 1-18
Battery Storage 1-19
Checking Electrolyte Specific Gravity 1-19
Determining State of Battery Charge 1-19
Liquid Level Check 1-18
Battery Overheat Warning System 7-10
Battery Power System 7-8
Belts, Safety 2-65
Bleeding Procedures
Brakes 3-92
Hydraulic Systems 3-15
Nose Gear Hydraulic System 3-33
Bonding Requirements, Electrical 1-26
Boost Pumps, Fuel 5-23
Brake System 3-83
Anti-Skid 3-85
Bleeding 3-92
Emergency 3-93
Multiple Disc 3-86
Parking 3-93
Rigging 3-92
Trouble Shooting 3-83
Burst Disc Valve, Oxygen 4-34

C

Cabin Air Conditioning System 4-10
Cabin Air Pressure Indicator 6-18
Cabin Altimeter 6-18
Cabin Doors 2-43
Hook Adjustment - Lower Door 2-43
Installation 2-52

C

Lock Actuator Adjustment - Lower Door 2-43
Removal 2-49
Torsion Bar Adjustment - Upper Door 2-43
Cabin Pressurization System 4-17
Cabin Windows 2-69
Cabinet, Refreshment 2-69
Calibration Assembly, Position Indicators 6-18
Calibration 6-19
Check Valve, Bleed Air 4-10
Check Valve, Fuel Vent System 5-30
Check Valve, Hydraulic 3-8
Circuit Breakers 7-12
Clock 6-18
Cockpit Center Pedestal 2-43
Control RPM and Aural Warning Switch Adjustment 2-43
Compass, Magnetic 6-16A
Compressor Motor, Refrigerant 4-4
Checking Pulley Alignment 4-10
Checking V-Belt Tension 4-10
V-Belt Tension Adjustment 4-10
Compressor, Refrigerant 4-4
Oil Charge 4-7
Control Cable Damage Limitations 2-2E
Control Surfaces
Balance Check 2-4
Balancing 2-4
Static Rebalancing 2-2E
Control Systems
Aileron 2-4
Elevator 2-35
Rudder 2-25
Crew Shoulder Harness 2-65

D

Damage Limitations, Control Cable 2-2E
DC Generator System 7-6
Brush Wear Check, Starter Generator 7-6
Control Box, Generator 7-6
Control Panel, Generator 7-6
Operation 7-6
Overvoltage Control Box 7-6A
Reverse Current Cutout Relays 7-6A
Starter Generators 7-6
Voltage Regulators 7-6A
DC Power Distribution 7-1
Functional Check 7-2
DC Power System 7-1
Trouble Shooting 7-3
Defog System, Windshield 4-26
Functional Check, W/S O'Heat Warn Light 4-30
Removal and Installation 4-30
Defueling 1-6
Dehumidifier, Windshield 4-30
Removal and Installation 4-30
Determining Aircraft Center of Gravity in Percent of MAC 1-4D
Directional Control Valves, Main Gear Door 3-26C
Directisyn Flux Valve Calibration 6-17
Doors
Cabin 2-43
Main Gear 3-78
Nose Gear 3-54

D

Drain Valves
Fuel Filters 1-6
Fuel System 1-6

E

Electrical Bonding Requirements 1-26
Elevator Control System 2-35
Removal and Installation 2-35
Rigging 2-35
Trouble Shooting 2-35
Elevator Spoiler Tab Replacement 2-39
Emergency Air Bottle, Servicing 1-23
Emergency Air Pressure Gage 6-18
Emergency Brake System 3-93
Emergency Control Valve, Cabin Altitude 4-23
Emergency Exit Window 2-69
Engine 5-1
Assembly 5-5
Danger Areas 5-2
Ground Operation 5-5
Before Starting 5-5
Emergency Procedures 5-6
Pre-Start Inspection 5-5
Shutdown 5-6
Starting 5-5
Installation 5-3
Maintenance 5-1
Nacelles 5-12G
Removal 5-3
Throttle Cables 5-12
Engine Anti-Icing System 5-16
Engine Fire Detection System 5-12G
Control Unit 5-12G
Removal and Installation 5-14
Sensing Elements 5-12G
Removal and Installation 5-12G
Trouble Shooting 5-14
Engine Ice Detection System 5-14
Functional Check 5-16
Operation 5-14
Engine Instruments 6-8
Fuel Flow Indicating System 6-10
Oil Pressure Indicating System 6-11
Oil Temperature Indicating System 6-11
Pressure Ratio Indicating System 6-10
Tachometer System 6-10
Temperature Indicating System 6-8
Engine Lubrication System 5-16B
Engine Nacelles 5-12G
Anti-Icing System 5-16
Engine Power Controls 5-11
Removal and Installation 5-11
Rigging 5-11
Environmental Systems 4-1
Cabin Air Conditioning 4-10
Cabin Pressurization 4-17
Oxygen 4-31
Refrigeration 4-1
Functional Check 4-3
Erosion Shoe, Nose Cone
Installation 2-77
Removal 2-77

E

Evaporator and Blower 4-7
Exterior Paint Repair 1-24A
Exterior - Tip Tank Erosion Protective Coat 1-24A
External Cleaning and Care 1-24
External Power 1-10, 7-10

F

Filters
- Fuel 5-30
- Hydraulic 3-8

Fire Detection System, Engine 5-12G
Firewall Supply Shutoff Valves 3-2
Flap Position Indicator 6-18
Flap System - Wing 2-15
- Actuator 2-15
  - Disassembly 2-15
  - Installation 2-21
  - Reassembly 2-16A
  - Removal 2-15
- Hydraulic 3-94
  - Operation 3-94, 3-95
- Removal and Installation of Components 2-21
- Rigging 2-21, 2-22
- Trouble Shooting 3-95

Flight Instruments 6-16
- Airspeed and Machmeter 6-16
- Airspeed Indicator 6-16
- Altimeter 6-16
- Machmeter 6-16
- Mach Warning System 6-16
- Rate of Climb Indicator 6-16
- Turn and Bank Indicator 6-16

Flow Control Valve 4-17
Flux Valve Calibration, Directisyn 6-17
Fuel Flow Indicating System 6-10
Fuel Quantity Gage 6-18
Fuel Quantity Indicating System 5-34A
- Calibration Procedure 5-41
- Fuel Probe Circuit Insulation and High Voltage Check 5-38
- Fuel Probe Sensors 5-38
- Indicator 5-34A, 5-41
- Indicator Test 5-39
- Selector Switch 5-41
- Selector Switch Test 5-39
- Tank Units 5-41
- Temperature Compensator Test 5-38

Fuel System 5-17
- Anti-Ice Additives 1-4F
- Defueling 1-6
- Fueling 1-5
- Recommended Fuels 1-5

Fuel System Components
- Boost Pumps 5-23
  - Removal and Installation 5-23
- Drain Valves 1-6
- Filters 5-30
- Fuselage Fuel Tanks 5-21
  - Bladder Installation 5-21
  - Bladder Removal 5-21

F

- Motorized Fuel Shutoff Valves 5-23
  - Functional Check 5-23
- Tip Tanks 5-17
  - Installation 5-21
  - Maintenance and Repair 5-17
  - Removal 5-17
- Wing Tanks 5-17

Fuel Tank Sealing 5-42
Fuel Temperature Warning System 5-30
Fuel Vent System, Ram Air 5-30
Fuselage 2-39
- Sealing 2-71

G

General Description, Aircraft 1-1
Generator Brush Wear Check 7-6
Generator Control Box 7-6
Generator Control Panel 7-6
Generator, Starter 7-6
Generator System, DC 7-6
Generator, Vortex 2-2D
Ground Handling 1-3
- Jacking 1-3
- Leveling 1-3
- Towing 1-3

Ground Service Quick-Disconnects 3-15

H

Heat Exchanger 4-10
Horizontal Stabilizer System 2-30A
- Actuator 2-30A
  - Emergency Operation 2-33
  - Motor Clutch Check 2-34
  - Normal Operation 2-30A
- Rigging 2-33
- Trouble Shooting 2-33

Hydraulic System 3-2
- Bleeding 3-15
- Components
  - Accumulator 3-8
  - Aspirator 3-8
  - Check Valves 3-8
  - Filters 3-8
  - Firewall Supply Shutoff Valves 3-2
  - Ground Service Quick-Disconnects 3-15
  - Pressure Gage 6-18
  - Pressure Indicating System 3-15
  - Pressure Indicator 6-18
  - Pumps 3-2
    - Auxiliary 3-8
    - Engine-Driven 3-2
  - Relief Valve 3-15
  - Reservoir 3-2
- Landing Gear 3-15
- Servicing 3-2
- Trouble Shooting 3-3

I

Ice Detection System, Engine 5-14
Ice Detection System, Windshield 4-30
Inboard Door Uplatch Mechanism, Main Gear 3-78
Inspection Requirements 8-1
  Daily 8-1
  Postflight 8-3
  Preflight 8-2
  Replacement and Overhaul Schedule 8-30
  Special 8-14
    Engine Change 8-15
    Hard Landing 8-14
    Severe Turbulence and/or Maneuvers 8-15
  6 Month 8-16
  600-Hour 8-17
  1200-Hour 8-20
  2400-Hour 8-24
  6000-Hour 8-25
Interior Cleaning And Care 1-25
Instrument Markings 6-8
Instrument Panel 6-1
Instruments, Engine 6-8
Instruments, Miscellaneous 6-18
Inverter Power Relay 7-12
  Removal and Installation 7-12
Inverter Switching Relay 7-11
  Removal and Installation 7-12
Inverters 7-11
  Emergency Operation 7-11
  Normal Operation 7-11
  Removal and Installation 7-11

L

Landing Gear Emergency Air Extension System 3-26A
Landing Gear Hydraulic System 3-15
  Bleeding Nose Gear 3-33
  Operation 3-16A, 3-18
Landing Gear Hydraulic System Components
  Directional Control Valve 3-26C
  Gear Door Selector Valve 3-27
  Nose Gear Pressure Boost Valve 3-33
  Priority Valves 3-27
  Shuttle Valves 3-27
Landing Gear System 3-33
  Gear Indication 3-34
  Main Gear 3-62
  Nose Gear 3-34
Leading Particulars 1-2
Lighting, Exterior
  Landing 7-16
  Navigation 7-16
  Removal and Installation 7-16
  Rotating Beacon 7-16
  Taxi 7-16
Lighting, Interior
  Baggage Compartment 7-16
  Cabin Reading 7-16
  Circuit Breaker Panel 7-16

L

  Glareshield Flood 7-16
  Map Reading 7-16
  Overhead Door 7-16
  Pilot and Copilot Overhead 7-16
  Switch Panel Flood 7-16
Lightning Strike Protection 2-2D
Lubrication Requirements 1-10
Lubrication System, Engine 5-16B
Lubrication System Servicing 1-6
  Adding Oil 1-6
  Approved Oils 1-6
  Changing Oil 1-6
  Flushing 1-10
  Metallic Particle Check 1-10

M

Machmeter 6-16
Mach Warning System 6-16
  Functional Check 6-16
Magnetic Compass 6-16A
  Compensation 6-16A
Main Gear 3-62
  Actuator 3-73
    Disassembly 3-73
    Functional Test 3-78
    Installation 3-78
    Reassembly 3-75
    Removal 3-73
    Trouble Shooting 3-73
    Wear Tolerance Inspection 3-75
  Doors 3-78
  Inboard Door Actuators 3-81
    Disassembly 3-81
    Installation 3-83
    Reassembly 3-82
    Removal 3-81
  Inboard Door Uplatch Mechanism 3-78
    Actuator 3-78
      Disassembly 3-78
      Installation 3-78
      Reassembly 3-78
      Removal 3-78
  Shock Strut 3-66
    Disassembly 3-68
    Functional Test 3-72
    Installation 3-72
    Reassembly 3-69
    Removal 3-66
    Torque Arm Replacement 3-66
    Wear Tolerance Inspection 3-69
  Wheel 3-62
    Disassembly 3-62
    Inspection 3-65
    Installation 3-65
    Reassembly 3-65
    Removal 3-62
Map Case 2-65
Metallic Particle Check 1-10
Miscellaneous Instruments 6-18
  AC Voltmeter 6-18
  Ammeters 6-18

M

Cabin Air Pressure Indicator 6-18
Cabin Altimeter 6-16A
Clock 6-18
DC Voltmeter 6-18
Emergency Air Pressure Gage 6-18
Flap Position Indicator 6-18
Fuel Quantity Gage 6-18
Hydraulic Pressure Gage 6-18
Hydraulic Pressure Indicator 6-18
Oxygen Pressure Gage 6-18
Pitch Trim Position Indicator 6-18
Ram Air Temperature Gage 6-18
Roll Trim Position Indicator 6-18
Yaw Trim Position Indicator 6-18
Multiple Disc Brakes 3-86
Disassembly 3-86, 3-89
Functional Test 3-92
Inspection 3-89, 3-90
Installation 3-91, 3-92
Removal 3-86
Rework and Reassembly 3-91

N

Nacelles, Engine 5-12G
Nose Gear 3-34
Actuators 3-46
Disassembly 3-46
Functional Test 3-51
Installation 3-51
Reassembly 3-48
Removal 3-46
Wear Tolerance Inspection 3-48
Doors 3-54
Rigging 3-54
Uplatch Mechanism 3-51
Actuator 3-51
Disassembly 3-51
Reassembly 3-53
Removal 3-51
Rigging 3-53
Shock Strut 3-41
Disassembly 3-42
Functional Test 3-46
Installation 3-46
Reassembly 3-44
Removal 3-42
Wear Tolerance Inspection 3-44
Wheels 3-39
Disassembly 3-39
Inspection 3-39
Installation 3-41
Reassembly 3-39
Removal 3-39
Nose Wheel Steering System 3-54
Rigging 3-61

O

Oil Pressure Indicating System 6-11
Oil Temperature Indicating System 6-11
Overheat Warning System, Battery 7-10
Overvoltage Control Box 7-6A
Oxygen System 4-31
Aneroid 4-31
Burst Disc Valve 4-34
Crew Masks 4-31
Cylinder Assembly 4-31
Cylinder Shutoff Valve 4-31
Door Actuator Valve 4-33
Leakage Test 4-33
Manual Shutoff Valves 4-31
Passenger Mask 4-31
Pressure Gage 6-18
Regulator 4-31
Removal and Installation 4-33
Servicing 1-24
Solenoid Shutoff Valve 4-31

P

Panels
Circuit Breaker 7-12
Generator Control 7-6
Instrument 6-1
Readout 6-8
Switch 7-12
Parking Brake System 3-93
Rigging 3-93
Peri-Seal Connectors 4-25
Pitch Trim Position Indicator 6-18
Pitot Static System 6-12
Pitot System Leakage Check 6-12
Pitot System Operational Check 6-12
Static System Leakage Check 6-12
Position Indicator Calibration Assembly 6-18
Power Controls, Engine 5-11
Power Distribution
AC 7-10
DC 7-1
Power Receptacle, External 1-10, 7-10
Power Relays, Inverters 7-12
Power Systems
AC 7-10
DC 7-2
Pressure Boost Valve, Nose Gear 3-33
Pressure Ratio Indicating System, Engine 6-10
Pressure Relief Valve, Cabin 4-24
Pressure Warning System, Cabin 4-25
Pressurization System, Cabin 4-17
Air Exhaust Control Valve 4-23
Altitude Controller 4-19
Calibration Procedure 4-19
Altitude Emergency Control Valve 4-23

P

Pressure Relief Valve 4-24
Pressure Warning System 4-25
Safety Valve 4-23
Peri-Seal Connectors 4-25
Principal Dimensions 1-3
Priority Valve, Hydraulic 3-27
Pumps 3-2
Auxiliary 3-8
Engine-Driven 3-2
Leakage Check 3-8
Replacement 3-8
Fuel Boost 5-23

R

Ram Air Damper 4-17
Ram Air Fuel Vent System 5-30
Check Valves 5-30
Functional Check 5-30
Operation 5-30
Removal and Installation 5-34A
Ram Air Temperature Gage 6-18
Rate of Climb Indicator 6-16A
Readout Panel 6-8
Refreshment Cabinet 2-69
Refrigeration System 4-1
Compressor 4-4
Compressor Motor 4-4
Condenser 4-6
Evaporator and Blower 4-7
Receiver Dehydrator 4-6
Regulators, Oxygen System 4-31
Regulators, Voltage 7-6B
Relief Valves 3-15
Emergency Air 3-15
Return 3-15
System Pressure 3-15
Vacuum 3-15
Reservoir, Hydraulic 3-2
Reverse Current Cutout Relay 7-6A
Roll Trim Position Indicator 6-18
Rudder Control System 2-25
Removal and Installation 2-29
Rigging 2-28
Trouble Shooting 2-25
Rudder Spoiler Tab Replacement 2-30
Rudder Trim Tab System 2-30
Actuator 2-30
Removal and Installation 2-30A
Trouble Shooting 2-30A

S

Safety Belt 2-65
Safety Valve, Cabin 4-23
Aneroid Switch Functional Test 4-24
Sealing, Fuel Tank
Cleaning 5-46
Equipment and Materials 5-44
General Application Requirements 5-46
Method of Application 5-44
Mixing Sealing Compounds 5-45
Repairing Dome Type Nutplates 5-48
Repairing Fillet Seals 5-46
Repairing Fillet Sealed Fasteners 5-48
Repairing Injection Seals 5-48
Repairing Prepack and Faying Surface Seals 5-48
Repairing Rivet Seals 5-48
Types of Seals 5-42
Dome Type Nutplates 5-44
Faying Surface Seal 5-43
Injection Seal 5-43
Prepack Seals 5-43
Sealed Bolts 5-43
Sealed Rivets 5-43
Sealing, Fuselage 2-71
Equipment and Material 2-71
Preparation for Sealing 2-71
Sealing Application 2-72
Electrical Seal Fitting 2-75
Fastener Seal 2-75
Faying Surface Seal 2-72
Fillet Seal 2-74
Hole and Slot Seal 2-74
Injection Seal 2-72
Pylon and Firewall Sealant 2-76
Type of Seals 2-71
Electrical Wire 2-71
Fastener 2-71
Faying Surface 2-71
Fillet 2-71
Hole and Slot Filling 2-71
Injection 2-71
Seats 2-56
Cleaning 2-65
Crew 2-56
Passengers 2-56
Selector Valve, Gear Control 3-27
Selector Valve, Gear Door 3-27
Servicing Batteries 1-18
Emergency Air Bottle 1-23
Fuel System 1-4F
Hydraulic Accumulator 1-22
Hydraulic Reservoir 1-23
Lubrication System 1-6
Main Gear Shock Strut 1-11
Nose Gear Shock Strut 1-10
Oxygen System 1-24
Refrigeration System 1-20
Tires 1-18
Shock Strut
Main Gear 3-66
Nose Gear 3-41
Shoulder Harness, Crew 2-65
Shuttle Valves, Hydraulic 3-27
Speakers, Cockpit 7-12
Removal and Installation 7-16
Spoiler System 3-93, 2-22
Actuator 2-22
Disassembly 2-22
Reassembly and Installation 2-24
Removal 2-22
Removal and Installation 2-24

S

Rigging 2-25
Trouble Shooting 3-93
Spoiler Tab Replacement
Aileron 2-15
Elevator 2-39
Rudder 2-30
Stabilizer System, Horizontal 2-30A
Stall Warning and Control System 2-39
Operation 2-39
Starter-Generator Brush Wear Check 7-6
Starter-Generators 7-6
Steering System, Nose Wheel 3-54
Actuator
Reassembly 3-60
Removal and Disassembly 3-57
Replacement and Adjustment of Nose Wheel Steering Followup 3-60A
Replacement and Adjustment of Rudder Pedal Followup 3-54
Rigging 3-61
Switch Panel 7-12
Switching Relay, Inverter 7-11

T

Tachometer System, Engine 6-10
Temperature Controls 4-17
Functional Test 4-17
Temperature Indicating System, Exhaust 6-8
Tip Tanks, Fuel 5-17
Toilet 2-69
Torque Requirements 1-26
Transformer, Step-Down 7-11
Turn and Bank Indicator 6-16

U

Uplatch Mechanism, Nose Gear 3-51

V

Voltage Regulator 7-6B
Adjustment 7-8
Removal and Installation 7-6B
Voltmeter
AC 6-18
DC 6-18
Vortex Generators 2-2D
Replacement 2-2D

W

Weighing the Aircraft 1-3
Wheels
Main Gear 3-62
Nose Gear 3-39
Window 2-69
Cabin 2-69
Removal and Installation 2-69
Emergency Exit 2-69
Windshield 2-65
Defog System 4-26
Ice Detection System 4-30
Installation 2-65
Inner 2-68
Outer 2-68
Replacement 2-65
Wings 2-2
Removal and Installation 2-2
Wing Flap System 2-15
Wing Fuel Tanks 5-17
Wiring Identification 7-1
Worktable 2-69

Y

Yaw Trim Position Indicator 6-18